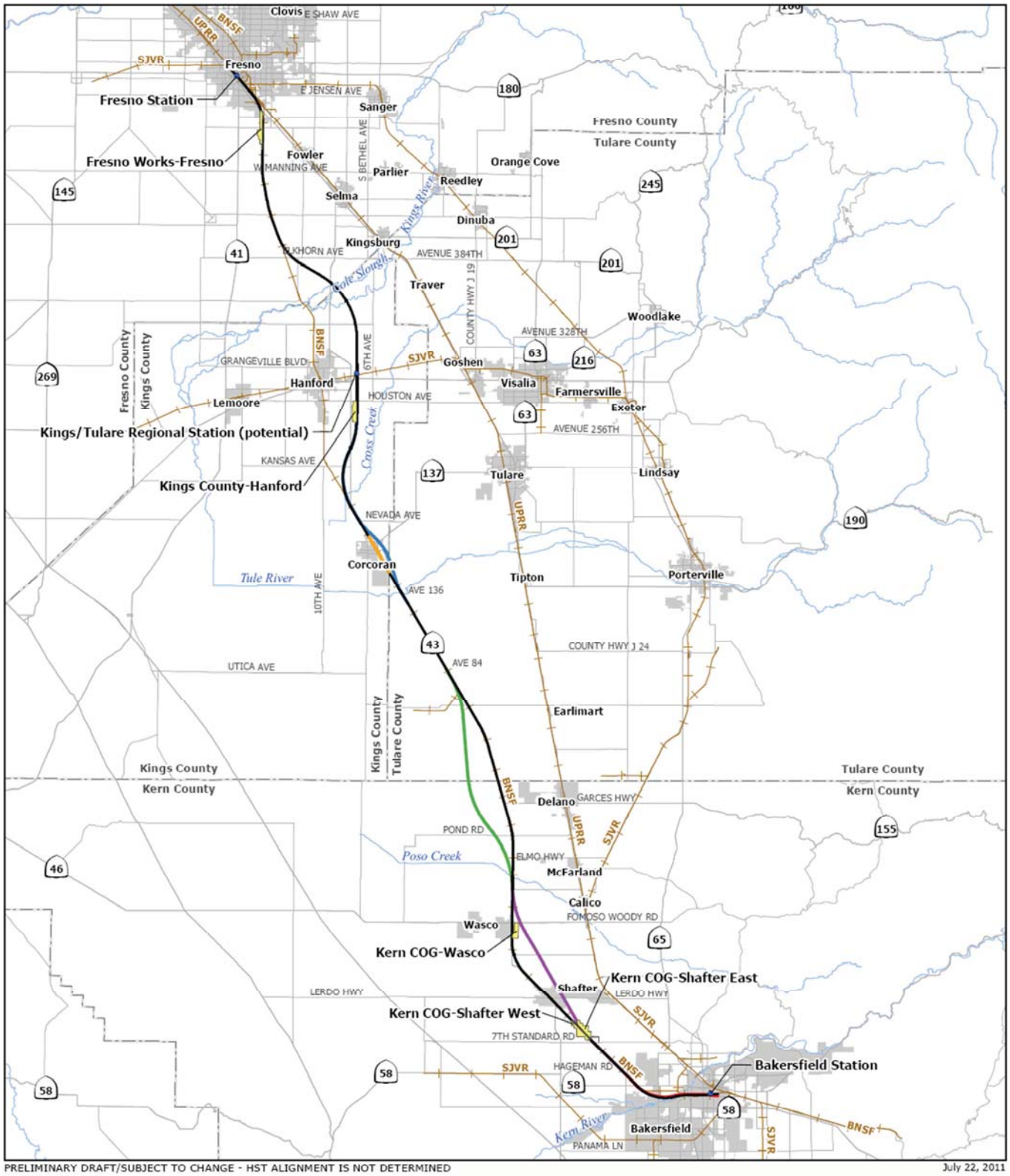

PRELIMINARY DRAFT/SUBJECT TO CHANGE - HST ALIGNMENT IS NOT DETERMINED

Source: URS, 2011

July 22, 2011

BNSF Alternative
Corcoran Elevated
Corcoran Bypass
Allensworth Bypass
Wasco-Shafter Bypass
Bakersfield South
Station location
Alternative heavy maintenance facility (HMF)
Stream
Existing rail line
Community/Urban area
County boundary

N

0 5 10 Miles

0 10 20 Kilometers

PN-1

HST alternatives and HMF sites carried forward for further study

CALIFORNIA High-Speed Rail Authority

U.S. Department of Transportation Federal Railroad Administration

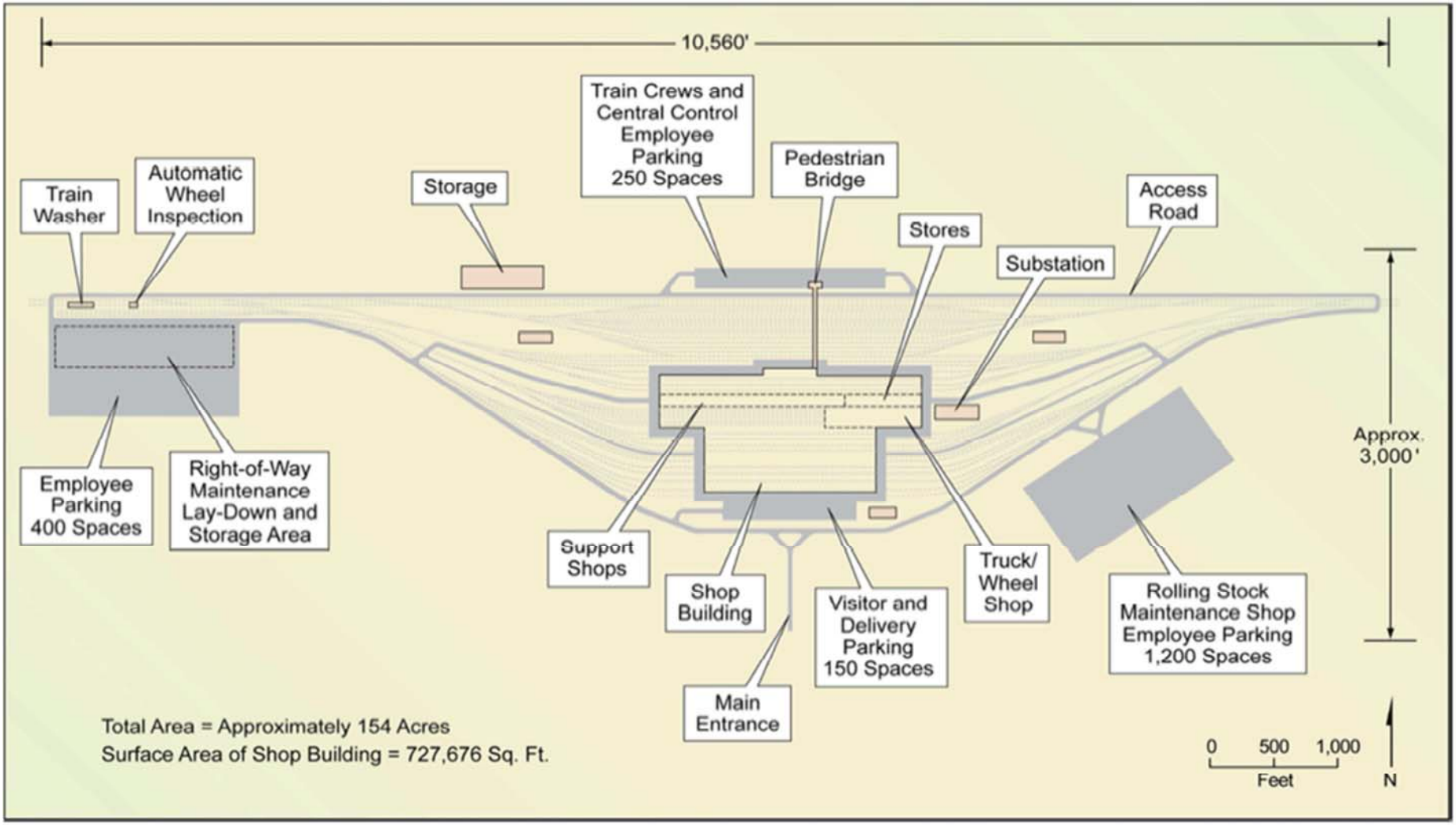

PN-2
Proposed Fresno to Bakersfield HMF Layout

PRELIMINARY DRAFT/SUBJECT TO CHANGE - HST ALIGNMENT IS NOT DETERMINED

July 29, 2011

Source: URS, 2011

Heavy maintenance facility

Impact footprint

Road

N

0 2 4
Miles

0 4 8
Kilometers

CALIFORNIA High-Speed Rail Authority

U.S. Department of Transportation Federal Railroad Administration

PN-2A

Proposed Fresno Works-Fresno HMF Site

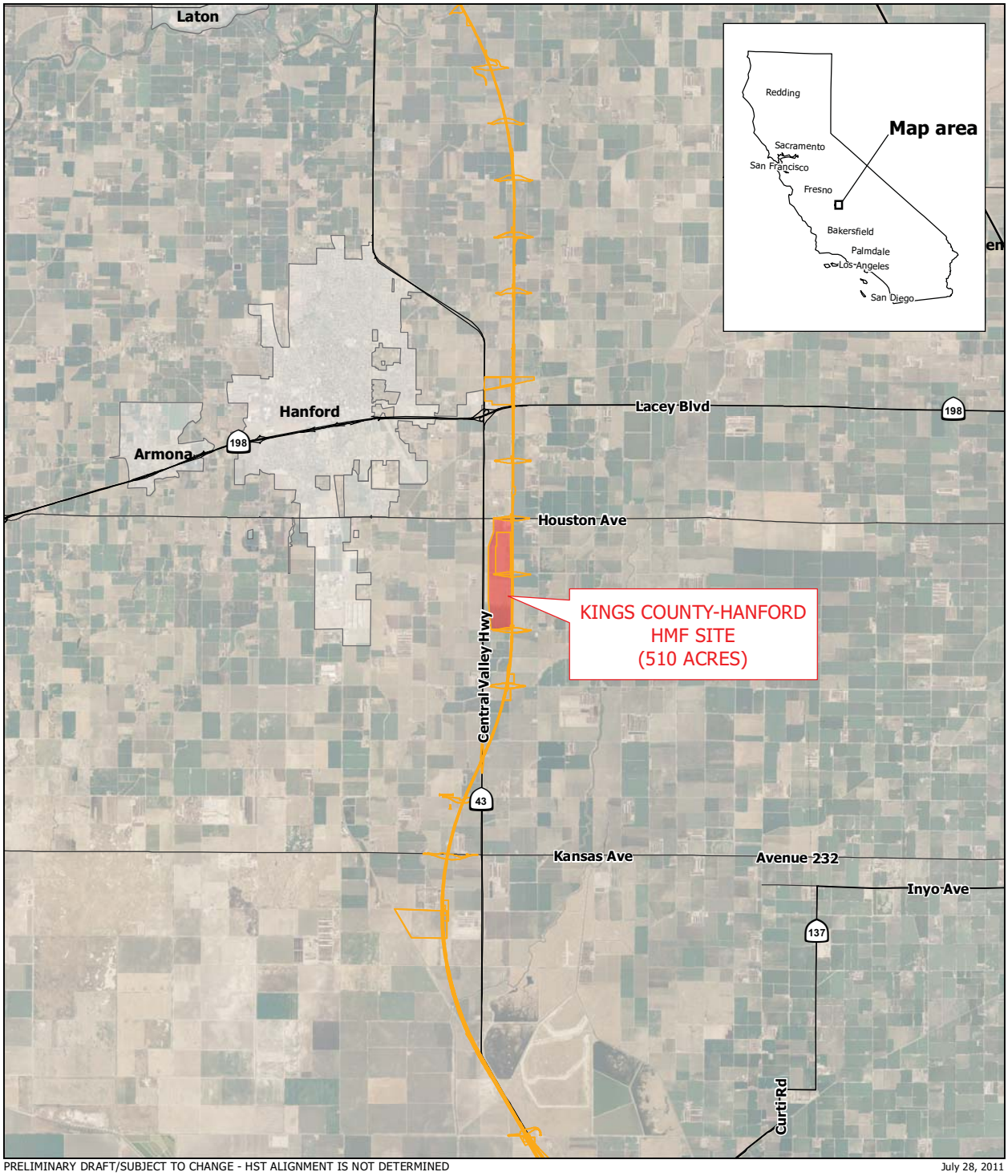

PRELIMINARY DRAFT/SUBJECT TO CHANGE - HST ALIGNMENT IS NOT DETERMINED

Source: URS, 2011

July 28, 2011

Heavy maintenance facility

Impact footprint

Road

N

0 2 4 Miles

0 4 8 Kilometers

CALIFORNIA High-Speed Rail Authority

U.S. Department of Transportation Federal Railroad Administration

PN-2B

Proposed Kings County-Hanford HMF Site

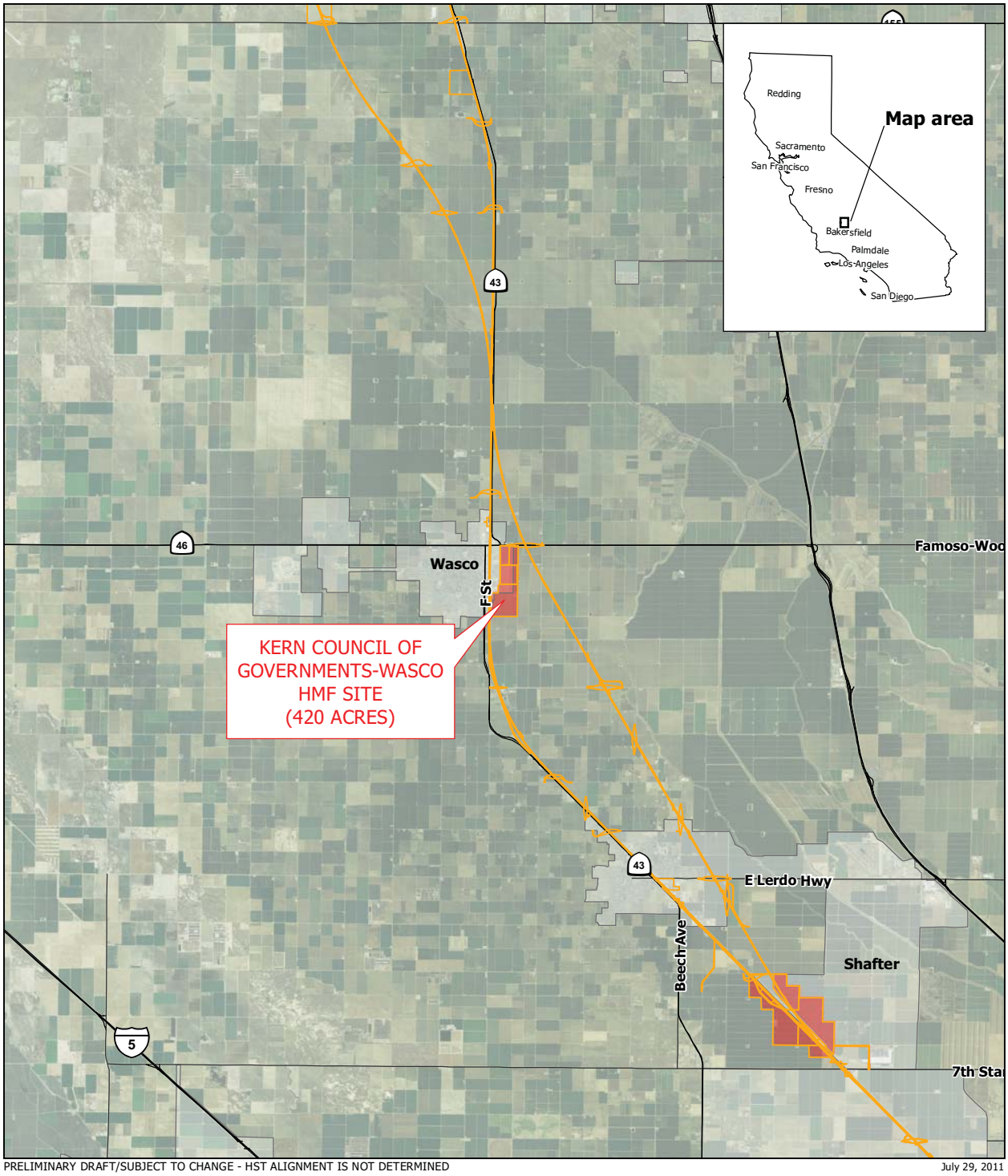

PRELIMINARY DRAFT/SUBJECT TO CHANGE - HST ALIGNMENT IS NOT DETERMINED

Source: URS, 2011

July 29, 2011

Heavy maintenance facility

Impact footprint

Road

N

0 2 4 Miles

0 4 8 Kilometers

CALIFORNIA High-Speed Rail Authority

U.S. Department of Transportation Federal Railroad Administration

PN-2C

Proposed Kern Council of Governments-Wasco HMF Site

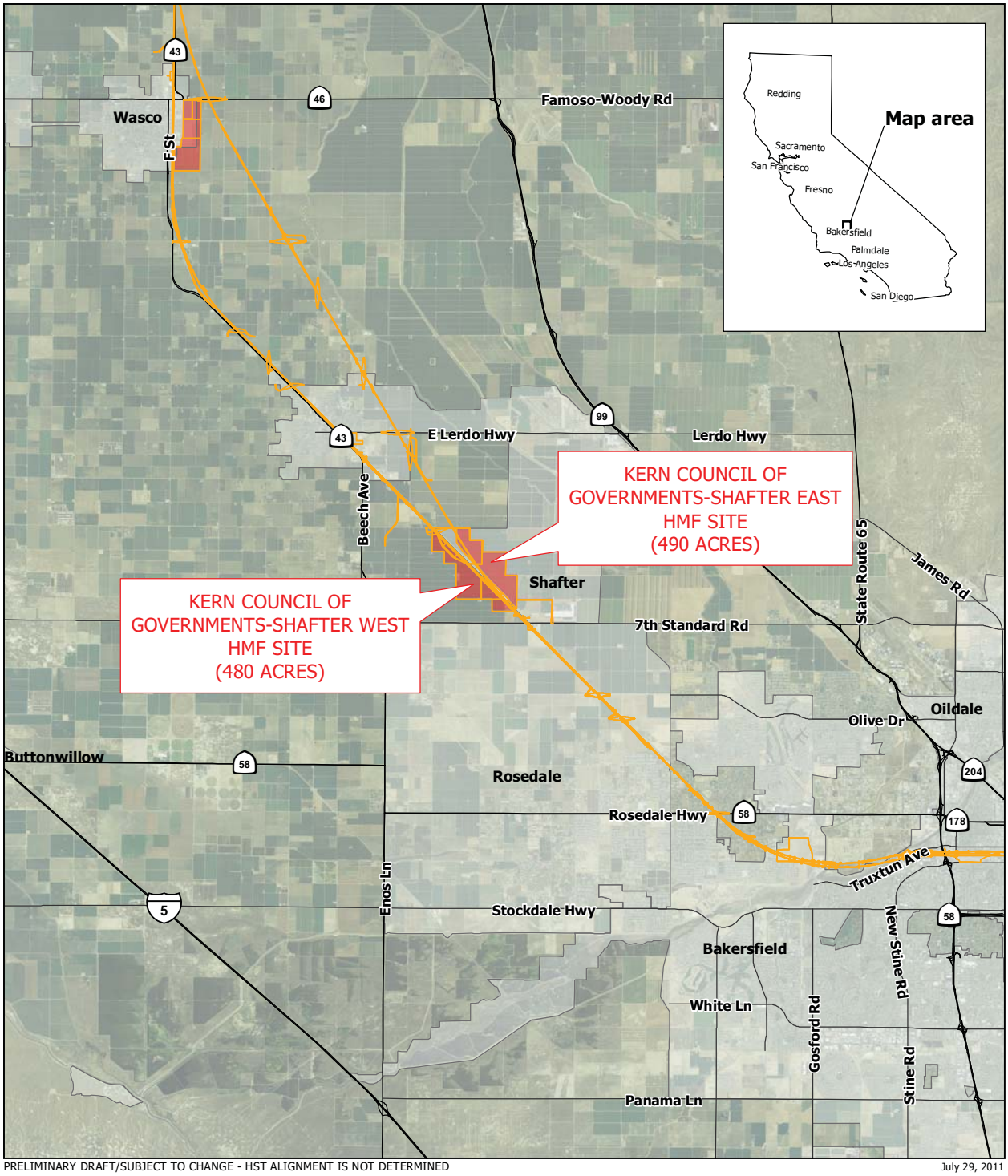

PRELIMINARY DRAFT/SUBJECT TO CHANGE - HST ALIGNMENT IS NOT DETERMINED

Source: URS, 2011

July 29, 2011

Heavy maintenance facility

Impact footprint

Road

N

0 2 4 Miles

0 4 8 Kilometers

PN-2D

Proposed Kern Council of Governments-Shafter East and West HMF Sites

CALIFORNIA High-Speed Rail Authority

U.S. Department of Transportation Federal Railroad Administration

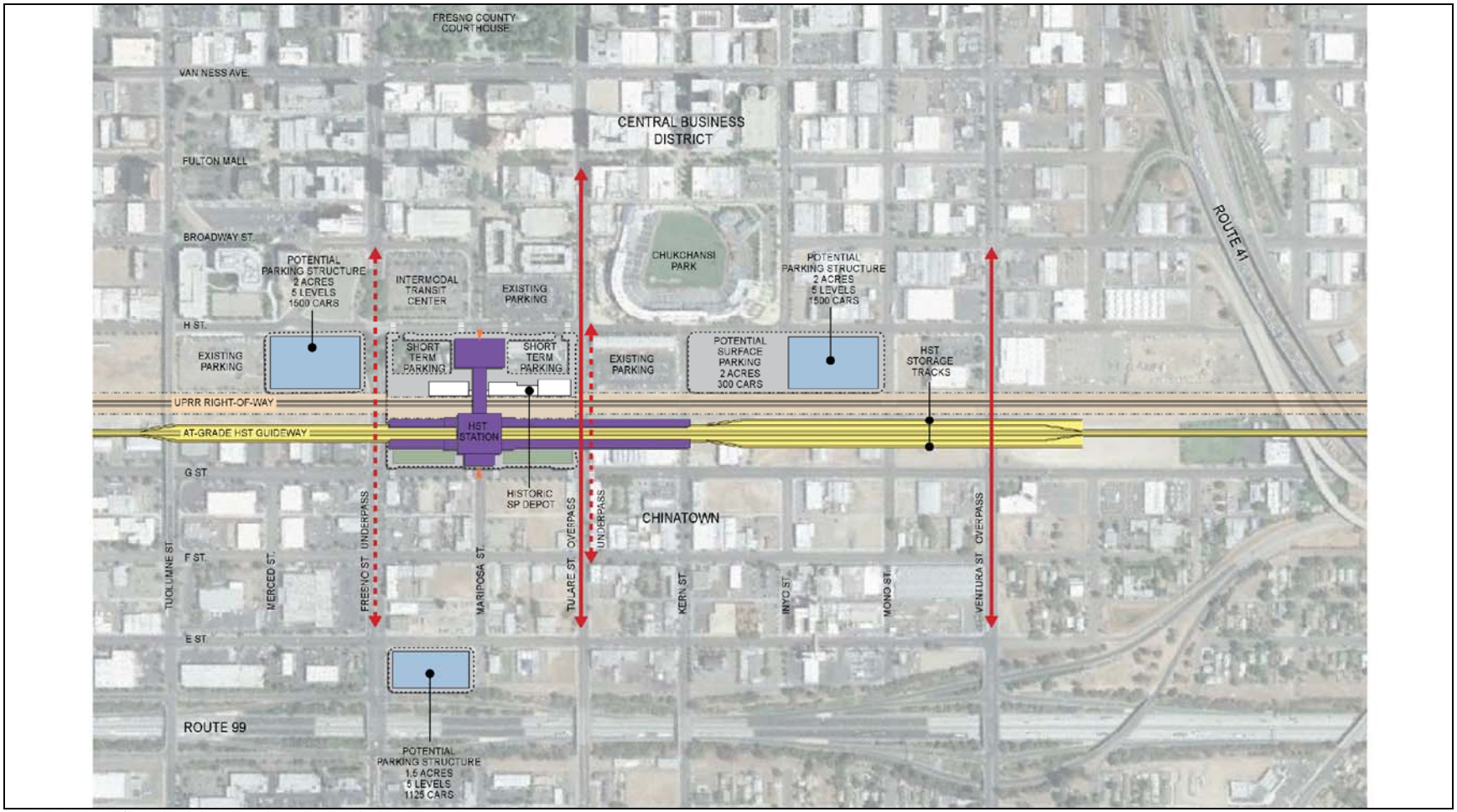

PRELIMINARY DRAFT/SUBJECT TO CHANGE - HST ALIGNMENT IS NOT DETERMINED

July 29, 2011

STATION ENTRANCE

KEY PEDESTRIAN LINKAGE

OPEN SPACE

STATION CAMPUS BOUNDARY

RIGHT-OF-WAY BOUNDARY

ROADWAY MODIFICATION

N

NOT TO SCALE

CALIFORNIA High-Speed Rail Authority

U.S. Department of Transportation Federal Railroad Administration

PN-3A

Fresno Station-Mariposa Alternative

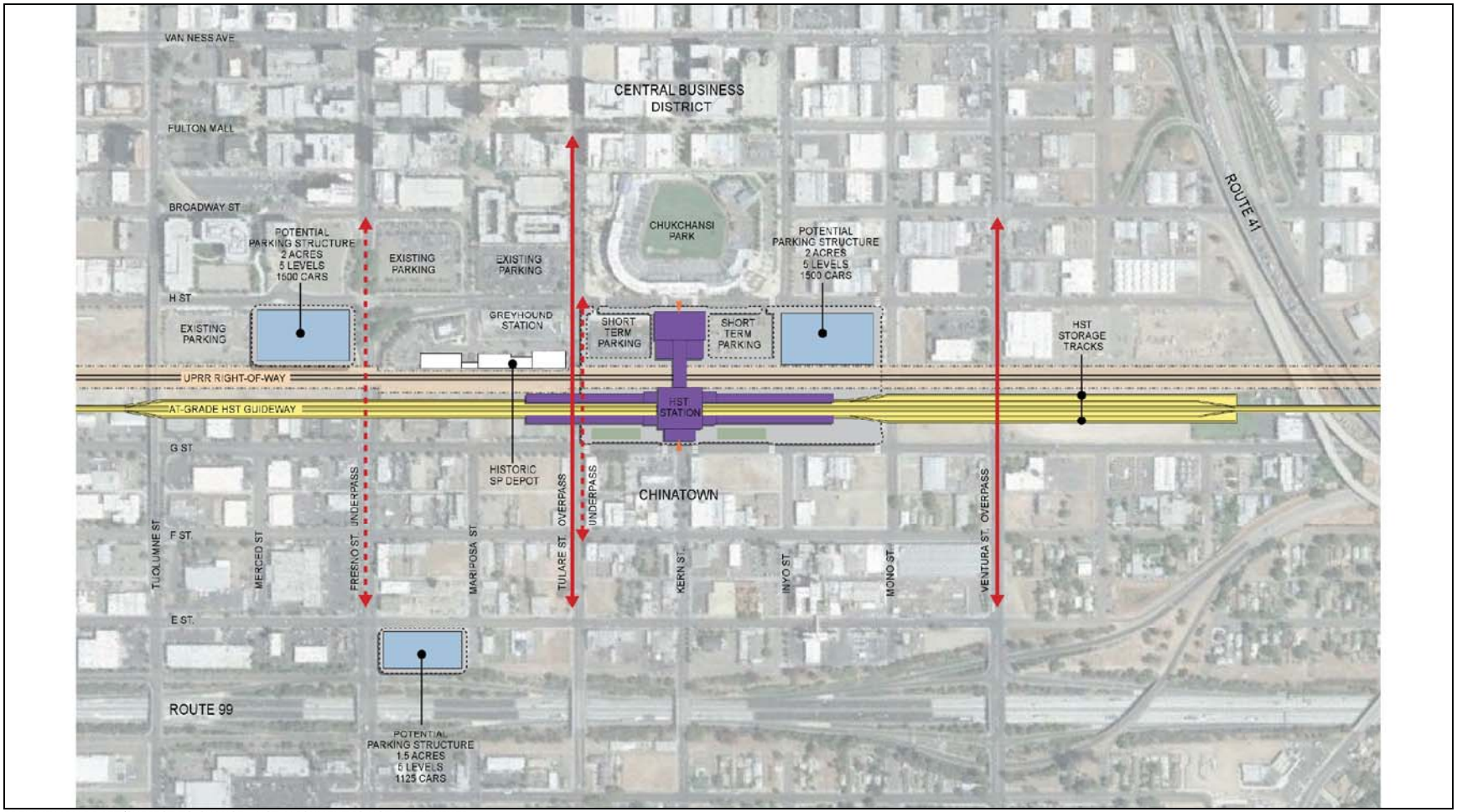

PRELIMINARY DRAFT/SUBJECT TO CHANGE - HST ALIGNMENT IS NOT DETERMINED

July 29, 2011

STATION ENTRANCE

KEY PEDESTRIAN LINKAGE

OPEN SPACE

STATION CAMPUS BOUNDARY

RIGHT-OF-WAY BOUNDARY

ROADWAY MODIFICATION

NOT TO SCALE

CALIFORNIA High-Speed Rail Authority

U.S. Department of Transportation Federal Railroad Administration

PN-3B

Fresno Station-Kern Alternative

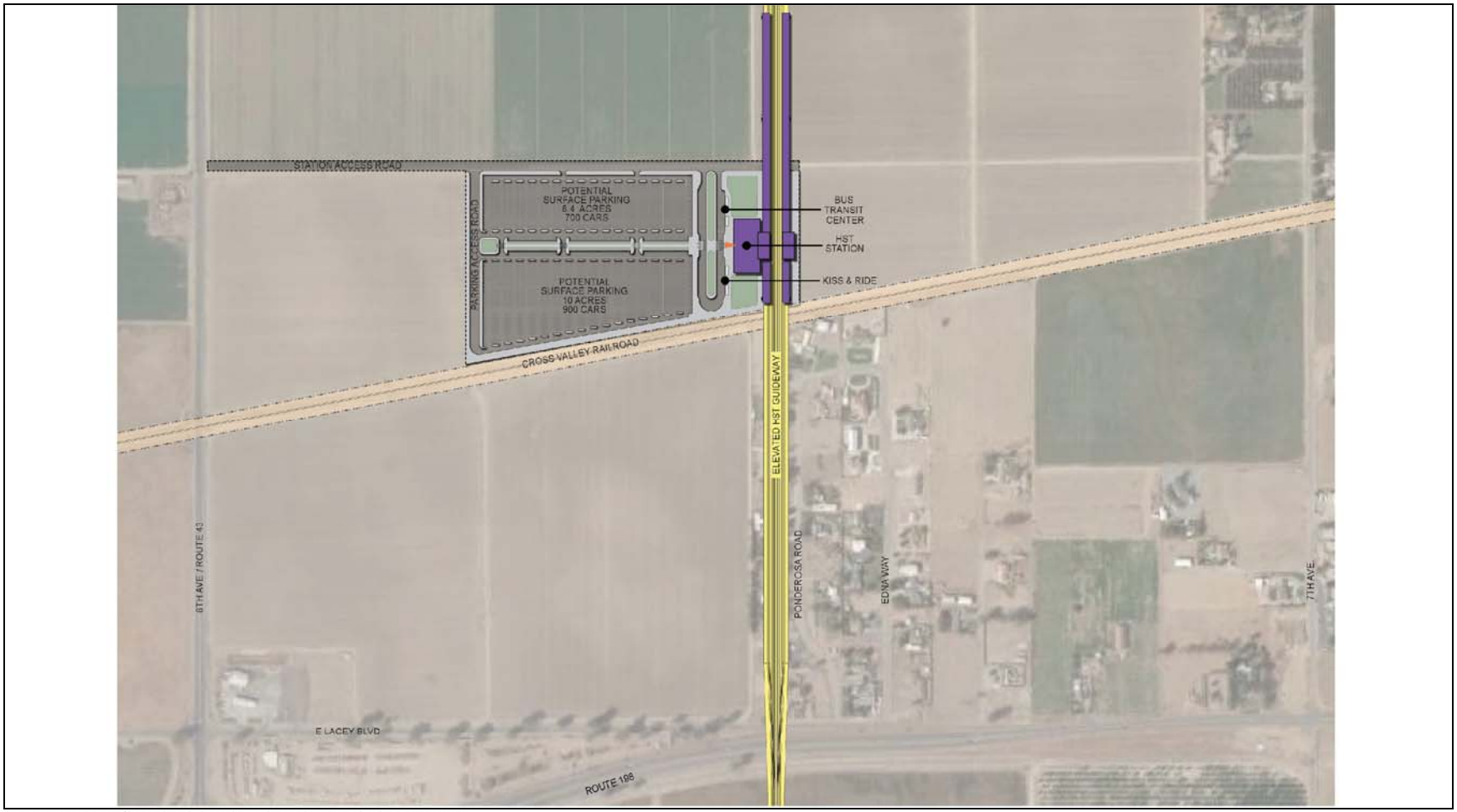

PRELIMINARY DRAFT/SUBJECT TO CHANGE - HST ALIGNMENT IS NOT DETERMINED

July 29, 2011

STATION ENTRANCE

KEY PEDESTRIAN LINKAGE

OPEN SPACE

STATION CAMPUS BOUNDARY

RIGHT-OF-WAY BOUNDARY

ROADWAY MODIFICATION

N

NOT TO SCALE

CALIFORNIA High-Speed Rail Authority

U.S. Department of Transportation Federal Railroad Administration

PN-4

Kings/Tulare Regional Station (potential)

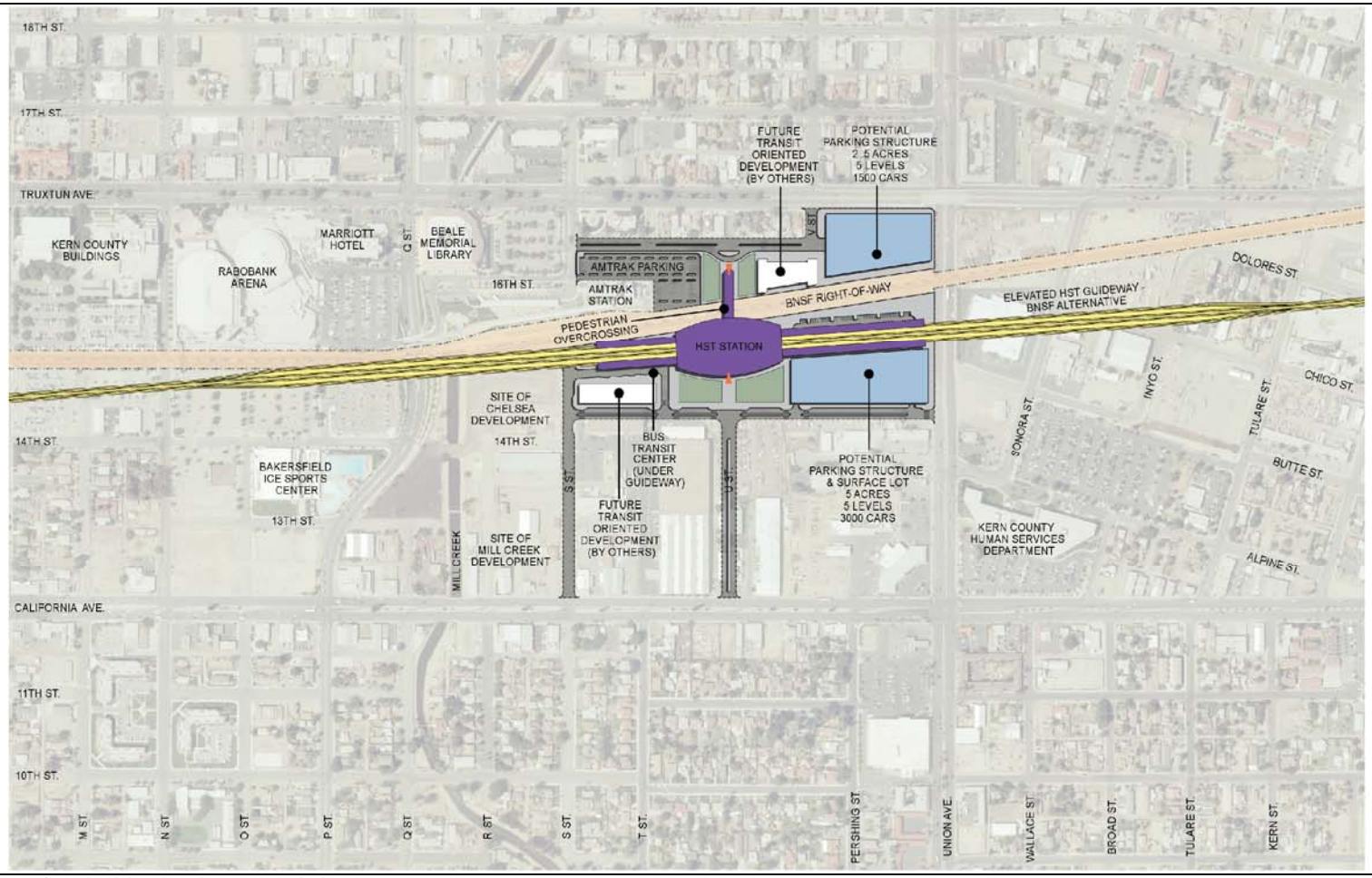

PRELIMINARY DRAFT/SUBJECT TO CHANGE - HST ALIGNMENT IS NOT DETERMINED

July 29, 2011

STATION ENTRANCE

KEY PEDESTRIAN LINKAGE

OPEN SPACE

STATION CAMPUS BOUNDARY

RIGHT-OF-WAY BOUNDARY

ROADWAY MODIFICATION

N

NOT TO SCALE

CALIFORNIA High-Speed Rail Authority

U.S. Department of Transportation Federal Railroad Administration

PN-5A

Bakersfield Station-North Alternative

PRELIMINARY DRAFT/SUBJECT TO CHANGE - HST ALIGNMENT IS NOT DETERMINED

July 29, 2011

STATION ENTRANCE

KEY PEDESTRIAN LINKAGE

OPEN SPACE

STATION CAMPUS BOUNDARY

RIGHT-OF-WAY BOUNDARY

ROADWAY MODIFICATION

N

NOT TO SCALE

CALIFORNIA High-Speed Rail Authority

U.S. Department of Transportation Federal Railroad Administration

PN-5B

Bakersfield Station-South Alternative

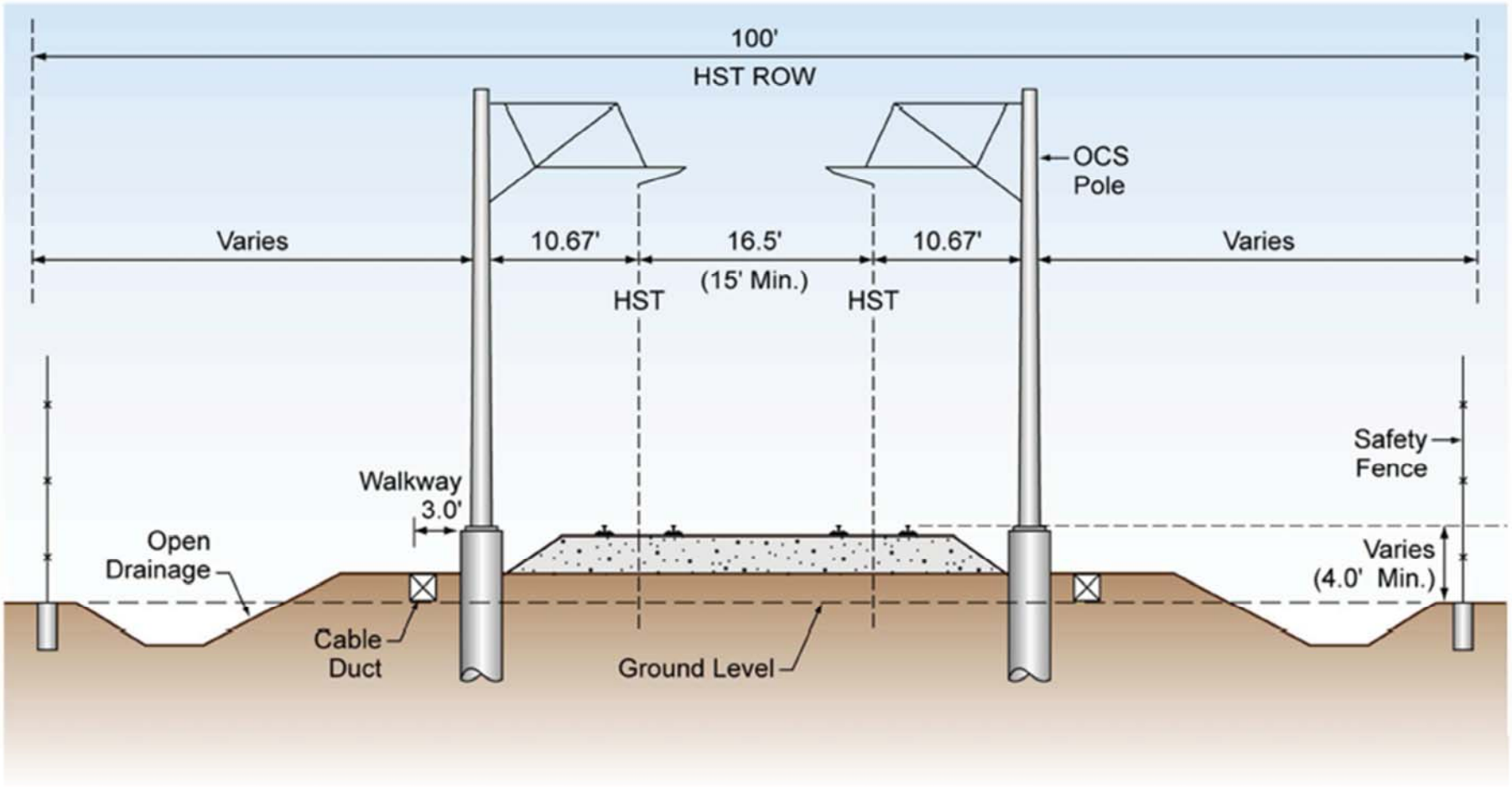

PN-6

Fresno to Bakersfield Typical Cross Section, At Grade

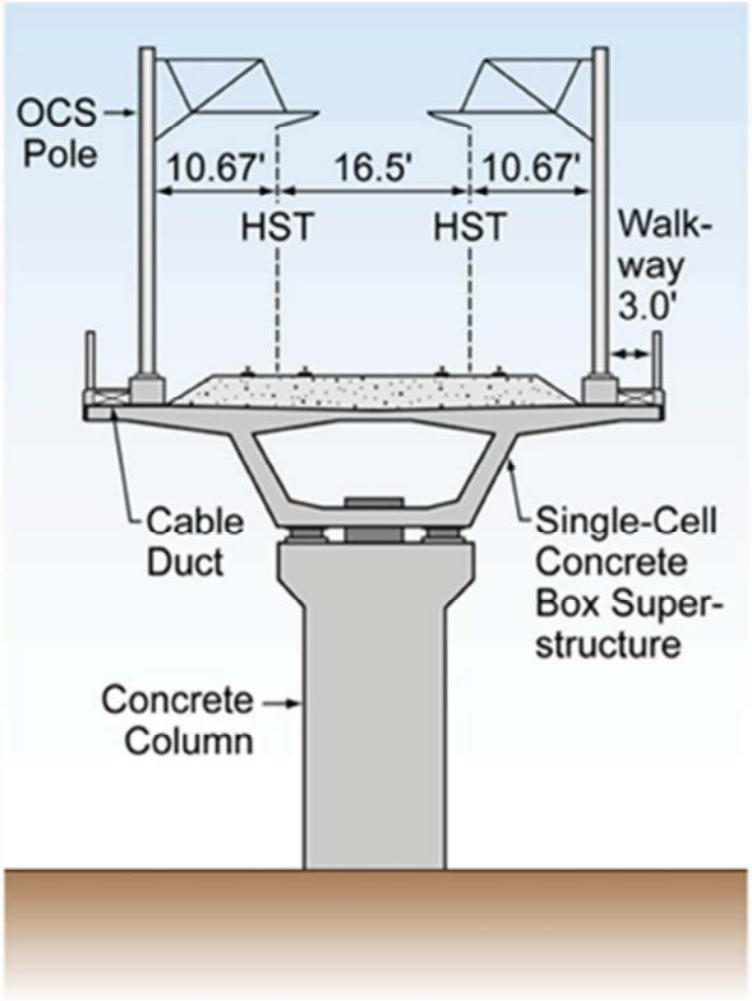

(a) Concrete Superstructure

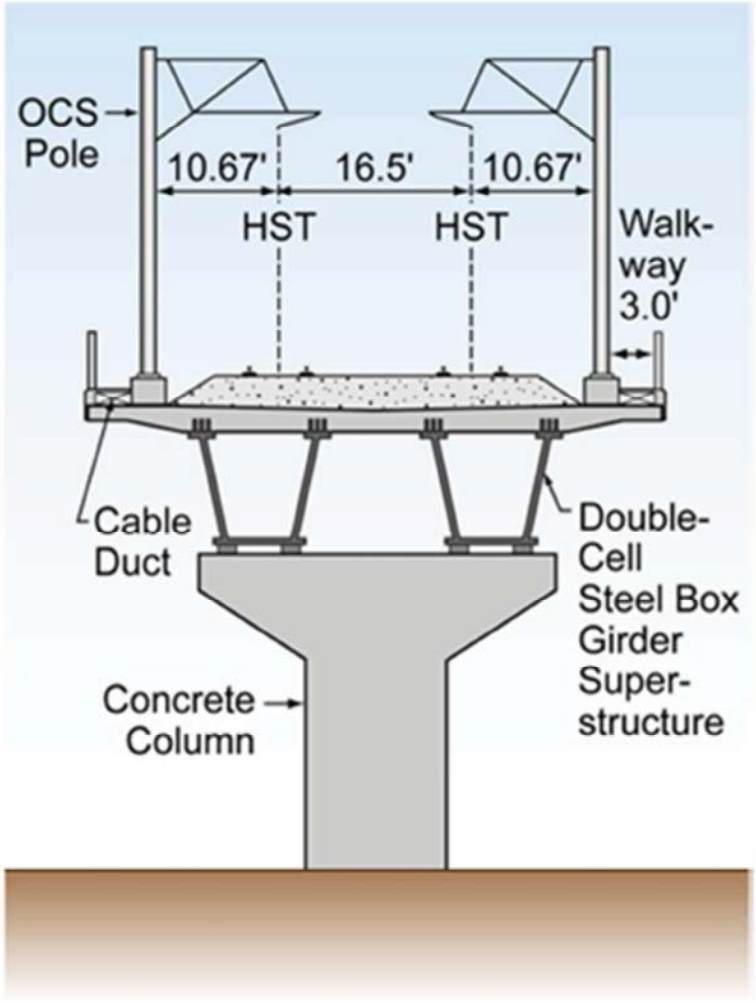

(b) Steel Superstructure

FIG-7

Fresno to Bakersfield Typical Cross Section, Elevated