CALIFORNIA HIGH-SPEED TRAIN

Project Environmental Impact Report/Environmental Impact Statement

Final EIR/EIS

Fresno to Bakersfield Section

Volume III:
Alignments and Other Plans

Section H
Roadway Structure Plans

April 2014

CALIFORNIA
High-Speed Rail Authority

U.S. Department of Transportation
Federal Railroad Administration

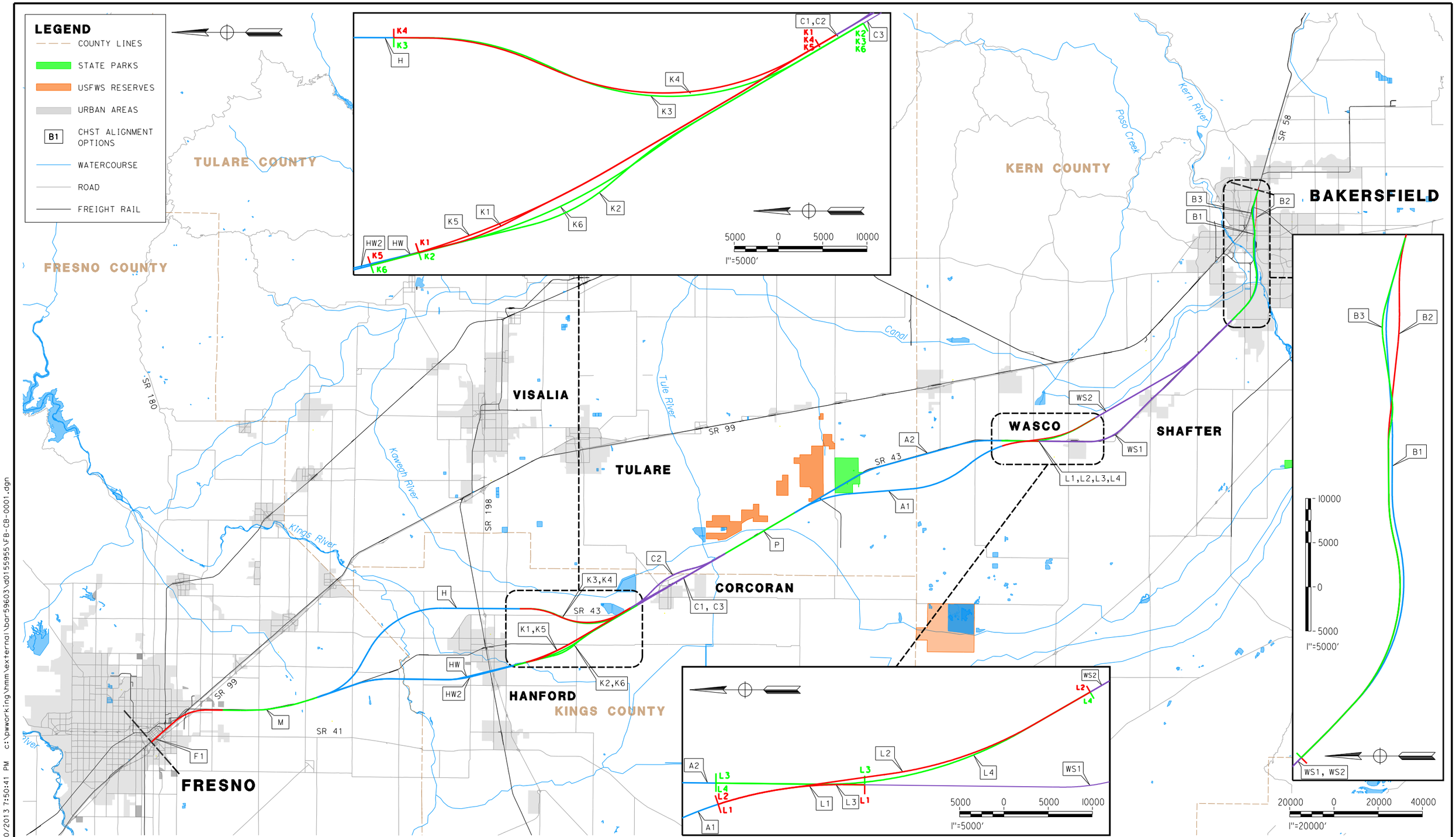

REV	DATE	BY	CHK	APP	DESCRIPTION

DESIGNED BY K. SEYMOUR
DRAWN BY P. TONKIN
CHECKED BY D. HUNT
IN CHARGE R. COFFIN
DATE 12/31/13

RECORD SET 15% DESIGN SUBMISSION - NOT FOR CONSTRUCTION

URS | HMM | ARUP
CALIFORNIA HIGH-SPEED TRAIN

CALIFORNIA HIGH-SPEED RAIL AUTHORITY

CALIFORNIA HIGH-SPEED TRAIN PROJECT FRESNO TO BAKERSFIELD

ALIGNMENT LOCATION MAP

CONTRACT NO. HSR 06-0003
DRAWING NO. CB0001
SCALE AS SHOWN
SHEET NO. 1 OF 7

BAR59603 12/30/2013 7:50:41 PM c:\pwworking\hmm\external\bar59603\d0155955\FB-CB-0001.dgn

SUBSECTION CODE	NAME	LENGTH (MI)	EIR-EIS ALTERNATIVE
F1	FRESNO SUBSECTION	7.00	BNSF
M	MONMOUTH SUBSECTION	8.24	BNSF
H	HANFORD SUBSECTION	20.45	BNSF (HANFORD EAST)
HW	HANFORD WEST BYPASS SUBSECTION	18.27	HANFORD WEST BYPASS 1 & 2
HW2	HANFORD WEST BYPASS SUBSECTION	17.22	HANFORD WEST BYPASS 1 & 2 MODIFIED
K1	KAWEAH SUBSECTION	10.12	HANFORD WEST BYPASS 2 (AT-GRADE) (CONNECTS TO C1 [CORCORAN ELEVATED] OR C2 [CORCORAN BYPASS])
K2	KAWEAH SUBSECTION	10.83	HANFORD WEST BYPASS 1 (AT-GRADE) (CONNECTS TO C3 [BNSF THROUGH CORCORAN])
K3	KAWEAH SUBSECTION	10.61	BNSF (HANFORD EAST) (CONNECTS TO C3 [BNSF THROUGH CORCORAN])
K4	KAWEAH SUBSECTION	9.92	BNSF (HANFORD EAST) (CONNECTS TO C1 [CORCORAN ELEVATED] OR C2 [CORCORAN BYPASS])
K5	KAWEAH SUBSECTION	11.17	HANFORD WEST BYPASS 2 MODIFIED (BELOW-GRADE) (CONNECTS TO C1 [CORCORAN ELEVATED] OR C2 [CORCORAN BYPASS])
K6	KAWEAH SUBSECTION	11.84	HANFORD WEST BYPASS 1 MODIFIED (BELOW-GRADE) (CONNECTS TO C3 [BNSF THROUGH CORCORAN])
C1	CORCORAN SUBSECTION	9.36	CORCORAN ELEVATED
C2	CORCORAN BYPASS SUBSECTION	9.49	CORCORAN BYPASS
C3	CORCORAN SUBSECTION	8.74	BNSF (THROUGH CORCORAN)
P	PIXLEY SUBSECTION	6.88	BNSF
A1	ALLENSWORTH BYPASS SUBSECTION	19.05	ALLENSWORTH BYPASS
A2	THROUGH ALLENSWORTH SUBSECTION	19.03	BNSF (THROUGH ALLENSWORTH)
L1	POSO CREEK SUBSECTION	3.18	ALLENSWORTH BYPASS (CONNECTS TO BNSF [THROUGH WASCO-SHAFTER])
L2	POSO CREEK SUBSECTION	8.41	ALLENSWORTH BYPASS (CONNECTS TO WASCO-SHAFTER BYPASS)
L3	POSO CREEK SUBSECTION	3.18	BNSF (THROUGH ALLENSWORTH) (CONNECTS TO BNSF [THROUGH WASCO-SHAFTER])
L4	POSO CREEK SUBSECTION	8.43	BNSF (THROUGH ALLENSWORTH) (CONNECTS TO WASCO-SHAFTER BYPASS)
WS1	THROUGH WASCO-SHAFTER SUBSECTION	20.63	BNSF (THROUGH WASCO-SHAFTER)
WS2	WASCO-SHAFTER BYPASS SUBSECTION	14.49	WASCO-SHAFTER BYPASS
B1	BAKERSFIELD URBAN SUBSECTION	11.95	BNSF (BAKERSFIELD NORTH)
B2	BAKERSFIELD URBAN SUBSECTION	11.88	BAKERSFIELD SOUTH
B3	BAKERSFIELD URBAN SUBSECTION	11.95	BAKERSFIELD HYBRID

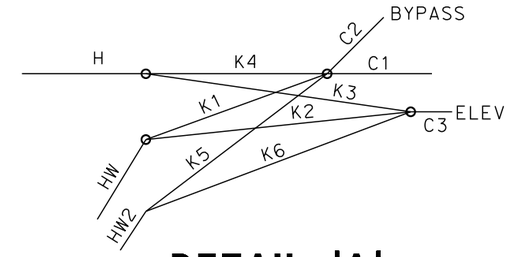

DETAIL 'A'

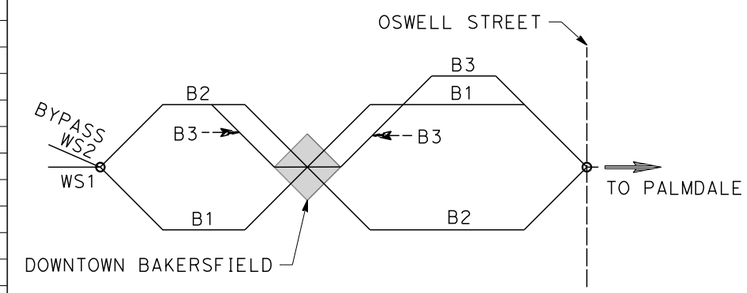

DETAIL 'B'

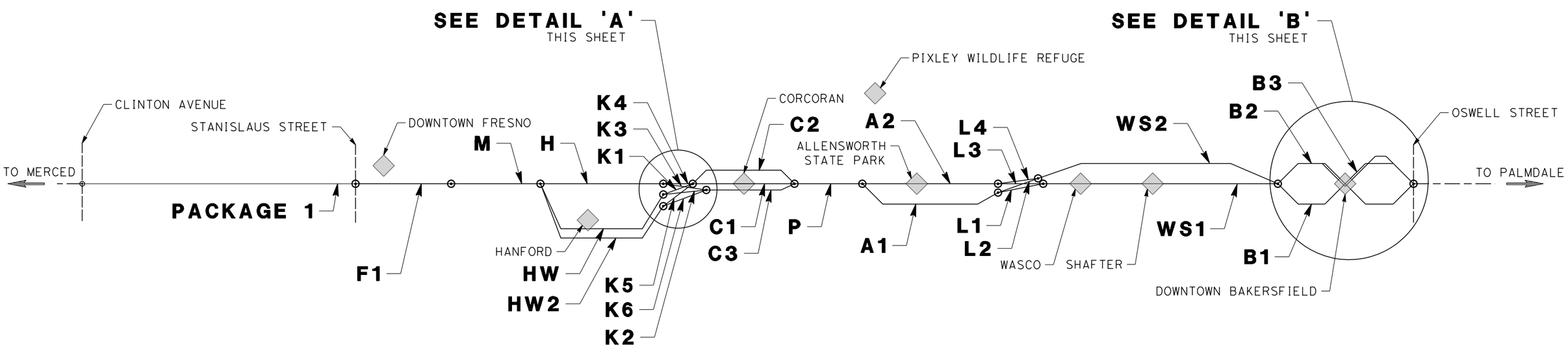

REV	DATE	BY	CHK	APP	DESCRIPTION

DESIGNED BY K. SEYMOUR
DRAWN BY P. TONKIN
CHECKED BY D. HUNT
IN CHARGE R. COFFIN
DATE 12/31/13

RECORD SET 15% DESIGN SUBMISSION - NOT FOR CONSTRUCTION

URS | HMM | ARUP
CALIFORNIA HIGH-SPEED TRAIN

CALIFORNIA HIGH-SPEED RAIL AUTHORITY

CALIFORNIA HIGH-SPEED TRAIN PROJECT
FRESNO TO BAKERSFIELD
ALIGNMENT
ALIGNMENT SUBSECTION DIAGRAM

CONTRACT NO. HSR 06-0003
DRAWING NO. CB0002
SCALE NTS
SHEET NO. 2 OF 7

$USER$ $DATE$ $TIME$ $FILE$

GENERAL SHEETS

DRAWING No	DRAWING DESCRIPTION	SHEET No.	PART No.
CB0001	ALIGNMENT - LOCATION MAP	SHEET 1 OF 7	1
CB0002	ALIGNMENT - ALIGNMENT SUBSECTIONS DIAGRAM	SHEET 2 OF 7	
SB2020	ROADWAY STRUCTURES - INDEX OF SHEETS - SHEET 1 OF 3	SHEET 3 OF 7	
SB2021	ROADWAY STRUCTURES - INDEX OF SHEETS - SHEET 2 OF 3	SHEET 4 OF 7	
SB2022	ROADWAY STRUCTURES - INDEX OF SHEETS - SHEET 3 OF 3	SHEET 5 OF 7	
CB0010	GENERAL - ABBREVIATIONS & LEGENDS - SHEET 1 OF 2	SHEET 6 OF 7	
CB0011	GENERAL - ABBREVIATIONS & LEGENDS - SHEET 2 OF 2	SHEET 7 OF 7	

ALIGNMENT F1 - FRESNO SUBSECTION

DRAWING No	DRAWING DESCRIPTION	SHEET No.	PART No.
SB0040	FRESNO SUBSECTION - ALIGNMENT F1 - OVERHEAD PLANNING STUDY - KEY MAP	SHEET 1 OF 13	1
ST2011	FRESNO SUBSECTION - ALIGNMENT F1 - OVERHEAD PLANNING STUDY - STANISLAUS ST	SHEET 2 OF 13	
ST2012	FRESNO SUBSECTION - ALIGNMENT F1 - OVERHEAD PLANNING STUDY - STANISLAUS ST	SHEET 3 OF 13	
ST2015	FRESNO SUBSECTION - ALIGNMENT F1 - UNDERPASS PLANNING STUDY - G ST / FRESNO ST	SHEET 4 OF 13	
ST2018	FRESNO SUBSECTION - ALIGNMENT F1 - UNDERPASS PLANNING STUDY - G ST / TULARE ST	SHEET 5 OF 13	
ST2021	FRESNO SUBSECTION - ALIGNMENT F2 - UNDERPASS PLANNING STUDY - VENTURA ST	SHEET 6 OF 13	
ST2022	FRESNO SUBSECTION - ALIGNMENT F1 - OVERHEAD PLANNING STUDY - E CHURCH AVE	SHEET 7 OF 13	
ST2023	FRESNO SUBSECTION - ALIGNMENT F1 - OVERHEAD PLANNING STUDY - E CHURCH AVE	SHEET 8 OF 13	
ST2024	FRESNO SUBSECTION - ALIGNMENT F1 - OVERHEAD PLANNING STUDY - EAST AVE	SHEET 9 OF 13	
ST2025	FRESNO SUBSECTION - ALIGNMENT F1 - OVERHEAD PLANNING STUDY - E CENTRAL AVE	SHEET 10 OF 13	
ST2028	FRESNO SUBSECTION - ALIGNMENT F1 - OVERHEAD PLANNING STUDY - E AMERICAN AVE	SHEET 11 OF 13	
ST2051	FRESNO SUBSECTION - ALIGNMENT F1 - PEDESTRIAN PLANNING STUDY - STANISLAUS ST	SHEET 12 OF 13	
ST2052	FRESNO SUBSECTION - ALIGNMENT F1 - PEDESTRIAN PLANNING STUDY - STANISLAUS ST	SHEET 13 OF 13	

ALIGNMENT M - MONMOUTH SUBSECTION

DRAWING No	DRAWING DESCRIPTION	SHEET No.	PART No.
SB0049	MONMOUTH SUBSECTION - ALIGNMENT M - OVERHEAD PLANNING STUDY - KEY MAP	SHEET 1 OF 9	1
ST2101	MONMOUTH SUBSECTION - ALIGNMENT M - OVERHEAD PLANNING STUDY - E LINCOLN AVE	SHEET 2 OF 9	
ST2103	MONMOUTH SUBSECTION - ALIGNMENT M - OVERHEAD PLANNING STUDY - E ADAMS AVE	SHEET 3 OF 9	
ST2104	MONMOUTH SUBSECTION - ALIGNMENT M - OVERHEAD PLANNING STUDY - E SOUTH AVE	SHEET 4 OF 9	
ST2106	MONMOUTH SUBSECTION - ALIGNMENT M - OVERHEAD PLANNING STUDY - E MANNING AVE	SHEET 5 OF 9	
ST2107	MONMOUTH SUBSECTION - ALIGNMENT M - OVERHEAD PLANNING STUDY - E MANNING AVE	SHEET 6 OF 9	
ST2109	MONMOUTH SUBSECTION - ALIGNMENT M - OVERHEAD PLANNING STUDY - E FLORAL AVE	SHEET 7 OF 9	
ST2111	MONMOUTH SUBSECTION - ALIGNMENT M - OVERHEAD PLANNING STUDY - E NEBRASKA AVE	SHEET 8 OF 9	
ST2113	MONMOUTH SUBSECTION - ALIGNMENT M - OVERHEAD PLANNING STUDY - E MOUNTAIN VIEW AVE	SHEET 9 OF 9	

ALIGNMENT H - HANFORD SUBSECTION

DRAWING No	DRAWING DESCRIPTION	SHEET No.	PART No.
SB0050	HANFORD SUBSECTION - ALIGNMENT H - OVERHEAD PLANNING STUDY - KEY MAP	SHEET 1 OF 14	1
ST2117	HANFORD SUBSECTION - ALIGNMENT H - OVERHEAD PLANNING STUDY - S CLOVIS AVE	SHEET 2 OF 14	
ST2119	HANFORD SUBSECTION - ALIGNMENT H - OVERHEAD PLANNING STUDY - E ELKHORN AVE	SHEET 3 OF 14	
ST2121	HANFORD SUBSECTION - ALIGNMENT H - OVERHEAD PLANNING STUDY - S FOWLER AVE	SHEET 4 OF 14	
ST2123	HANFORD SUBSECTION - ALIGNMENT H - OVERHEAD PLANNING STUDY - E DAVIS AVE	SHEET 5 OF 14	
ST2129	HANFORD SUBSECTION - ALIGNMENT H - OVERHEAD PLANNING STUDY - DOVER AVE	SHEET 6 OF 14	
ST2133	HANFORD SUBSECTION - ALIGNMENT H - OVERHEAD PLANNING STUDY - EXCELSIOR AVE	SHEET 7 OF 14	
ST2135	HANFORD SUBSECTION - ALIGNMENT H - OVERHEAD PLANNING STUDY - ELDER AVE	SHEET 8 OF 14	
ST2137	HANFORD SUBSECTION - ALIGNMENT H - OVERHEAD PLANNING STUDY - FLINT AVE	SHEET 9 OF 14	
ST2139	HANFORD SUBSECTION - ALIGNMENT H - OVERHEAD PLANNING STUDY - FARGO AVE	SHEET 10 OF 14	
ST2143	HANFORD SUBSECTION - ALIGNMENT H - OVERHEAD PLANNING STUDY - HANFORD ARMONA RD	SHEET 11 OF 14	
ST2145	HANFORD SUBSECTION - ALIGNMENT H - OVERHEAD PLANNING STUDY - HOUSTON AVE	SHEET 12 OF 14	
ST2146	HANFORD SUBSECTION - ALIGNMENT H - OVERHEAD PLANNING STUDY - HOUSTON AVE	SHEET 13 OF 14	
ST2147	HANFORD SUBSECTION - ALIGNMENT H - OVERHEAD PLANNING STUDY - IONA AVE	SHEET 14 OF 14	

ALIGNMENT HW - HANFORD WEST BYPASS SUBSECTION

DRAWING No	DRAWING DESCRIPTION	SHEET No.	PART No.
SB0055	HANFORD WEST BYPASS SUBSECTION - ALIGNMENT HW - OVERHEAD PLANNING STUDY - KEY MAP	SHEET 1 OF 10	1
ST2300	HANFORD WEST BYPASS SUBSECTION - ALIGNMENT HW - OVERHEAD PLANNING STUDY - E ELKHORN AVE	SHEET 2 OF 10	
ST2301	HANFORD WEST BYPASS SUBSECTION - ALIGNMENT HW - OVERHEAD PLANNING STUDY - EXCELSIOR AVE	SHEET 3 OF 10	
ST2302	HANFORD WEST BYPASS SUBSECTION - ALIGNMENT HW - OVERHEAD PLANNING STUDY - FLINT AVE	SHEET 4 OF 10	
ST2303	HANFORD WEST BYPASS SUBSECTION - ALIGNMENT HW - OVERHEAD PLANNING STUDY - FARGO AVE	SHEET 5 OF 10	
ST2306	HANFORD WEST BYPASS SUBSECTION - ALIGNMENT HW (AT-GRADE) - OVERHEAD PLANNING STUDY - GLENDALE AVE	SHEET 6 OF 10	
ST2308	HANFORD WEST BYPASS SUBSECTION - ALIGNMENT HW (AT-GRADE) - OVERHEAD PLANNING STUDY - STATE ROUTE 198	SHEET 7 OF 10	
ST2310	HANFORD WEST BYPASS SUBSECTION - ALIGNMENT HW (AT-GRADE) - OVERHEAD PLANNING STUDY - HANFORD ARMONA RD	SHEET 8 OF 10	
ST2312	HANFORD WEST BYPASS SUBSECTION - ALIGNMENT HW - OVERHEAD PLANNING STUDY - HOUSTON AVE	SHEET 9 OF 10	
ST2313	HANFORD WEST BYPASS SUBSECTION - ALIGNMENT HW - OVERHEAD PLANNING STUDY - IONA AVE	SHEET 10 OF 10	

ALIGNMENT HW2 - HANFORD WEST BYPASS SUBSECTION

DRAWING No	DRAWING DESCRIPTION	SHEET No.	PART No.
SB0054	HANFORD WEST BYPASS SUBSECTION - ALIGNMENT HW2 (BELOW-GRADE) - MODIFIED - OVERHEAD PLANNING STUDY - KEY MAP	SHEET 1 OF 11	1
ST2350	HANFORD WEST BYPASS SUBSECTION - ALIGNMENT HW2 (BELOW-GRADE) - MODIFIED - OVERHEAD PLANNING STUDY - ELK HORN AVE	SHEET 2 OF 11	
ST2351	HANFORD WEST BYPASS SUBSECTION - ALIGNMENT HW2 (BELOW-GRADE) - MODIFIED - OVERHEAD PLANNING STUDY - EXCELSIOR AVE	SHEET 3 OF 11	
ST2352	HANFORD WEST BYPASS SUBSECTION - ALIGNMENT HW2 (BELOW-GRADE) - MODIFIED - OVERHEAD PLANNING STUDY - FLINT AVE	SHEET 4 OF 11	
ST2353	HANFORD WEST BYPASS SUBSECTION - ALIGNMENT HW2 (BELOW-GRADE) - MODIFIED - OVERHEAD PLANNING STUDY - FARGO AVE	SHEET 5 OF 11	
ST2354	HANFORD WEST BYPASS SUBSECTION - ALIGNMENT HW2 (BELOW-GRADE) - MODIFIED - OVERHEAD PLANNING STUDY - W LACEY BLVD	SHEET 6 OF 11	
ST2355	HANFORD WEST BYPASS SUBSECTION - ALIGNMENT HW2 (BELOW-GRADE) - MODIFIED - OVERHEAD PLANNING STUDY - 13TH AVE	SHEET 7 OF 11	
ST2356	HANFORD WEST BYPASS SUBSECTION - ALIGNMENT HW2 (BELOW-GRADE) - MODIFIED - OVERHEAD PLANNING STUDY - GLENDALE AVE	SHEET 8 OF 11	
ST2357	HANFORD WEST BYPASS SUBSECTION - ALIGNMENT HW2 (BELOW-GRADE) - MODIFIED - OVERHEAD PLANNING STUDY - STATE ROUTE 198	SHEET 9 OF 11	
ST2358	HANFORD WEST BYPASS SUBSECTION - ALIGNMENT HW2 (BELOW-GRADE) - MODIFIED - OVERHEAD PLANNING STUDY - HANFORD ARMONA RD	SHEET 10 OF 11	
ST2359	HANFORD WEST BYPASS SUBSECTION - ALIGNMENT HW2 (BELOW-GRADE) - MODIFIED - OVERHEAD PLANNING STUDY - HOUSTON AVE	SHEET 11 OF 11	

$USER$ $DATE$ $TIME$ $FILE$

REV	DATE	BY	CHK	APP	DESCRIPTION

DESIGNED BY B. LUSCOMBE
DRAWN BY J. VALENZUELA
CHECKED BY P. TONKIN
IN CHARGE R. COFFIN
DATE 12/31/13

RECORD SET 15% DESIGN SUBMISSION - NOT FOR CONSTRUCTION

URS | HMM | ARUP
CALIFORNIA HIGH-SPEED TRAIN

CALIFORNIA HIGH-SPEED RAIL AUTHORITY

CALIFORNIA HIGH-SPEED TRAIN PROJECT
FRESNO TO BAKERSFIELD
ROADWAY STRUCTURES
INDEX OF SHEETS
SHEET 1 OF 3

CONTRACT NO. HSR 06-0003
DRAWING NO. SB2020
SCALE NO SCALE
SHEET NO. 3 OF 7

ALIGNMENT K1 - KAWEAH SUBSECTION

DRAWING No	DRAWING DESCRIPTION	SHEET No.	PART No.
SB0056	KAWEAH SUBSECTION - ALIGNMENT K1 - OVERHEAD PLANNING STUDY - KEY MAP	SHEET 1 OF 5	1
ST2320	KAWEAH SUBSECTION - ALIGNMENT K1 - OVERHEAD PLANNING STUDY - JACKSON AVE	SHEET 2 OF 5	
ST2321	KAWEAH SUBSECTION - ALIGNMENT K1 - OVERHEAD PLANNING STUDY - KANSAS AVE	SHEET 3 OF 5	
ST2322	KAWEAH SUBSECTION - ALIGNMENT K1 - OVERHEAD PLANNING STUDY - KANSAS AVE	SHEET 4 OF 5	
ST2323	KAWEAH SUBSECTION - ALIGNMENT K1 - OVERHEAD PLANNING STUDY - LANSING AVE	SHEET 5 OF 5	

ALIGNMENT K2 - KAWEAH SUBSECTION

DRAWING No	DRAWING DESCRIPTION	SHEET No.	PART No.
SB0057	KAWEAH SUBSECTION - ALIGNMENT K2 - OVERHEAD PLANNING STUDY - KEY MAP	SHEET 1 OF 4	1
ST2330	KAWEAH SUBSECTION - ALIGNMENT K2 - OVERHEAD PLANNING STUDY - JACKSON AVE	SHEET 2 OF 4	
ST2331	KAWEAH SUBSECTION - ALIGNMENT K2 - OVERHEAD PLANNING STUDY - LANSING AVE	SHEET 3 OF 4	
ST2332	KAWEAH SUBSECTION - ALIGNMENT K2 - OVERHEAD PLANNING STUDY - NEVADA AVE	SHEET 4 OF 4	

ALIGNMENT K3 - KAWEAH SUBSECTION

DRAWING No	DRAWING DESCRIPTION	SHEET No.	PART No.
SB0060	KAWEAH SUBSECTION - ALIGNMENT K3 - OVERHEAD PLANNING STUDY - KEY MAP	SHEET 1 OF 6	1
ST2201	KAWEAH SUBSECTION - ALIGNMENT K3 - OVERHEAD PLANNING STUDY - IDAHO AVE	SHEET 2 OF 6	
ST2203	KAWEAH SUBSECTION - ALIGNMENT K3 - OVERHEAD PLANNING STUDY - JACKSON AVE	SHEET 3 OF 6	
ST2207	KAWEAH SUBSECTION - ALIGNMENT K3 - OVERHEAD PLANNING STUDY - KENT AVE	SHEET 4 OF 6	
ST2209	KAWEAH SUBSECTION - ALIGNMENT K3 - OVERHEAD PLANNING STUDY - KANSAS AVE	SHEET 5 OF 6	
ST2211	KAWEAH SUBSECTION - ALIGNMENT K3 - OVERHEAD PLANNING STUDY - NEVADA AVE	SHEET 6 OF 6	

ALIGNMENT K4 - KAWEAH SUBSECTION

DRAWING No	DRAWING DESCRIPTION	SHEET No.	PART No.
SB0065	KAWEAH SUBSECTION - ALIGNMENT K4 - OVERHEAD PLANNING STUDY - KEY MAP	SHEET 1 OF 5	1
ST2200	KAWEAH SUBSECTION - ALIGNMENT K4 - OVERHEAD PLANNING STUDY - IDAHO AVE	SHEET 2 OF 5	
ST2222	KAWEAH SUBSECTION - ALIGNMENT K4 - OVERHEAD PLANNING STUDY - JACKSON AVE	SHEET 3 OF 5	
ST2226	KAWEAH SUBSECTION - ALIGNMENT K4 - OVERHEAD PLANNING STUDY - KENT AVE	SHEET 4 OF 5	
ST2228	KAWEAH SUBSECTION - ALIGNMENT K4 - OVERHEAD PLANNING STUDY - KANSAS AVE	SHEET 5 OF 5	

ALIGNMENT K5 - KAWEAH SUBSECTION

DRAWING No	DRAWING DESCRIPTION	SHEET No.	PART No.
SB0066	KAWEAH SUBSECTION - ALIGNMENT K5 - OVERHEAD PLANNING STUDY - KEY MAP	SHEET 1 OF 7	1
ST2250	KAWEAH SUBSECTION - ALIGNMENT K5 - OVERHEAD PLANNING STUDY - IONA AVE	SHEET 2 OF 7	
ST2251	KAWEAH SUBSECTION - ALIGNMENT K5 - OVERHEAD PLANNING STUDY - JACKSON AVE	SHEET 3 OF 7	
ST2252	KAWEAH SUBSECTION - ALIGNMENT K5 - OVERHEAD PLANNING STUDY - KANSAS AVE	SHEET 4 OF 7	
ST2253	KAWEAH SUBSECTION - ALIGNMENT K5 - OVERHEAD PLANNING STUDY - KANSAS AVE	SHEET 5 OF 7	
ST2254	KAWEAH SUBSECTION - ALIGNMENT K5 - OVERHEAD PLANNING STUDY - LANSING AVE	SHEET 6 OF 7	
ST2255	KAWEAH SUBSECTION - ALIGNMENT K5 - OVERHEAD PLANNING STUDY - LANSING AVE	SHEET 7 OF 7	

ALIGNMENT K6 - KAWEAH SUBSECTION

DRAWING No	DRAWING DESCRIPTION	SHEET No.	PART No.
SB0067	KAWEAH SUBSECTION - ALIGNMENT K6 - OVERHEAD PLANNING STUDY - KEY MAP	SHEET 1 OF 7	1
ST2260	KAWEAH SUBSECTION - ALIGNMENT K6 - OVERHEAD PLANNING STUDY - IONA AVE	SHEET 2 OF 7	
ST2261	KAWEAH SUBSECTION - ALIGNMENT K6 - OVERHEAD PLANNING STUDY - JACKSON AVE	SHEET 3 OF 7	
ST2262	KAWEAH SUBSECTION - ALIGNMENT K6 - OVERHEAD PLANNING STUDY - LANSING AVE	SHEET 4 OF 7	
ST2263	KAWEAH SUBSECTION - ALIGNMENT K6 - OVERHEAD PLANNING STUDY - LANSING AVE	SHEET 5 OF 7	
ST2264	KAWEAH SUBSECTION - ALIGNMENT K6 - OVERHEAD PLANNING STUDY - NEVADA AVE	SHEET 6 OF 7	
ST2265	KAWEAH SUBSECTION - ALIGNMENT K6 - OVERHEAD PLANNING STUDY - NEVADA AVE	SHEET 7 OF 7	

ALIGNMENT C1 - CORCORAN SUBSECTION

DRAWING No	DRAWING DESCRIPTION	SHEET No.	PART No.
SB0070	CORCORAN SUBSECTION - ALIGNMENT C1 - OVERHEAD PLANNING STUDY - KEY MAP	SHEET 1 OF 3	1
ST2230	CORCORAN SUBSECTION - ALIGNMENT C1 - OVERHEAD PLANNING STUDY - NEVADA AVE	SHEET 2 OF 3	
ST2232	CORCORAN SUBSECTION - ALIGNMENT C1 - OVERHEAD PLANNING STUDY - AVE 144	SHEET 3 OF 3	

ALIGNMENT C2 - CORCORAN BYPASS SUBSECTION

DRAWING No	DRAWING DESCRIPTION	SHEET No.	PART No.
SB0075	CORCORAN BYPASS SUBSECTION - ALIGNMENT C2 - OVERHEAD PLANNING STUDY - KEY MAP	SHEET 1 OF 3	1
ST2239	CORCORAN BYPASS SUBSECTION - ALIGNMENT C2 - OVERHEAD PLANNING STUDY - NEVADA AVE	SHEET 2 OF 3	
ST2244	CORCORAN BYPASS SUBSECTION - ALIGNMENT C2 - OVERHEAD PLANNING STUDY - CORCORAN HWY	SHEET 3 OF 3	

ALIGNMENT C3 - CORCORAN SUBSECTION

DRAWING No	DRAWING DESCRIPTION	SHEET No.	PART No.
SB0080	CORCORAN SUBSECTION - ALIGNMENT C3 - OVERHEAD PLANNING STUDY - KEY MAP	SHEET 1 OF 4	1
ST2271	CORCORAN SUBSECTION - ALIGNMENT C3 - OVERHEAD PLANNING STUDY - CHARLES ST	SHEET 2 OF 4	
ST2281	CORCORAN SUBSECTION - ALIGNMENT C3 - OVERHEAD PLANNING STUDY - AVE 148	SHEET 3 OF 4	
ST2282	CORCORAN SUBSECTION - ALIGNMENT C3 - OVERHEAD PLANNING STUDY - AVE 148	SHEET 4 OF 4	

ALIGNMENT P - PIXLEY SUBSECTION

DRAWING No	DRAWING DESCRIPTION	SHEET No.	PART No.
SB0090	PIXLEY SUBSECTION - ALIGNMENT P - OVERHEAD PLANNING STUDY - KEY MAP	SHEET 1 OF 5	1
ST2401	PIXLEY SUBSECTION - ALIGNMENT P - OVERHEAD PLANNING STUDY - AVE 128	SHEET 2 OF 5	
ST2411	PIXLEY SUBSECTION - ALIGNMENT P - OVERHEAD PLANNING STUDY - HESSE AVE	SHEET 3 OF 5	
ST2421	PIXLEY SUBSECTION - ALIGNMENT P - OVERHEAD PLANNING STUDY - AVE 112	SHEET 4 OF 5	
ST2431	PIXLEY SUBSECTION - ALIGNMENT P - OVERHEAD PLANNING STUDY - AVE 88	SHEET 5 OF 5	

ALIGNMENT A1 - ALLENSWORTH SUBSECTION

DRAWING No	DRAWING DESCRIPTION	SHEET No.	PART No.
SB0100	ALLENSWORTH BYPASS SUBSECTION - ALIGNMENT A1 - OVERHEAD PLANNING STUDY - KEY MAP	SHEET 1 OF 5	1
ST2501	ALLENSWORTH BYPASS SUBSECTION - ALIGNMENT A1 - OVERHEAD PLANNING STUDY - COUNTY RD J22	SHEET 2 OF 5	
ST2511	ALLENSWORTH BYPASS SUBSECTION - ALIGNMENT A1 - OVERHEAD PLANNING STUDY - GARCES HWY	SHEET 3 OF 5	
ST2521	ALLENSWORTH BYPASS SUBSECTION - ALIGNMENT A1 - OVERHEAD PLANNING STUDY - POND RD	SHEET 4 OF 5	
ST2531	ALLENSWORTH BYPASS SUBSECTION - ALIGNMENT A1 - OVERHEAD PLANNING STUDY - PETERSON RD	SHEET 5 OF 5	

ALIGNMENT A2 - ALLENSWORTH SUBSECTION

DRAWING No	DRAWING DESCRIPTION	SHEET No.	PART No.
SB0110	THROUGH ALLENSWORTH SUBSECTION - ALIGNMENT A2 - OVERHEAD PLANNING STUDY - KEY MAP	SHEET 1 OF 6	1
ST2601	THROUGH ALLENSWORTH SUBSECTION - ALIGNMENT A2 - OVERHEAD PLANNING STUDY - COUNTY RD J22	SHEET 2 OF 6	
ST2611	THROUGH ALLENSWORTH SUBSECTION - ALIGNMENT A2 - OVERHEAD PLANNING STUDY - AVE 24	SHEET 3 OF 6	
ST2621	THROUGH ALLENSWORTH SUBSECTION - ALIGNMENT A2 - OVERHEAD PLANNING STUDY - GARCES HWY	SHEET 4 OF 6	
ST2631	THROUGH ALLENSWORTH SUBSECTION - ALIGNMENT A2 - OVERHEAD PLANNING STUDY - SCHUSTER RD	SHEET 5 OF 6	
ST2641	THROUGH ALLENSWORTH SUBSECTION - ALIGNMENT A2 - OVERHEAD PLANNING STUDY - PETERSON RD	SHEET 6 OF 6	

$FILE$
$TIME$
$DATE$
$USER$

REV	DATE	BY	CHK	APP	DESCRIPTION

DESIGNED BY B. LUSCOMBE
DRAWN BY J. VALENZUELA
CHECKED BY P. TONKIN
IN CHARGE R. COFFIN
DATE 12/31/13

RECORD SET 15% DESIGN SUBMISSION - NOT FOR CONSTRUCTION

URS | HMM | ARUP
CALIFORNIA HIGH-SPEED TRAIN

CALIFORNIA HIGH-SPEED RAIL AUTHORITY

CALIFORNIA HIGH-SPEED TRAIN PROJECT
FRESNO TO BAKERSFIELD
ROADWAY STRUCTURES
INDEX OF SHEETS
SHEET 2 OF 3

CONTRACT NO. HSR 06-0003
DRAWING NO. SB2021
SCALE NO SCALE
SHEET NO. 4 OF 7

ALIGNMENT L2 - POSO CREEK SUBSECTION

DRAWING No	DRAWING DESCRIPTION	SHEET No.	PART No.
SB0130	POSO CREEK SUBSECTION - ALIGNMENT L2 - OVERHEAD PLANNING STUDY - KEY MAP	SHEET 1 OF 2	1
ST2751	POSO CREEK SUBSECTION - ALIGNMENT L2 - OVERHEAD PLANNING STUDY - STATE ROUTE 46	SHEET 2 OF 2	

ALIGNMENT L4 - POSO CREEK SUBSECTION

DRAWING No	DRAWING DESCRIPTION	SHEET No.	PART No.
SB0150	POSO CREEK SUBSECTION - ALIGNMENT L4 - OVERHEAD PLANNING STUDY - KEY MAP	SHEET 1 OF 2	1
ST2851	POSO CREEK SUBSECTION - ALIGNMENT L4 - OVERHEAD PLANNING STUDY - STATE ROUTE 46	SHEET 2 OF 2	

ALIGNMENT WS1 - WASCO-SHAFTER SUBSECTION

DRAWING No	DRAWING DESCRIPTION	SHEET No.	PART No.
SB0170	THROUGH WASCO-SHAFTER SUBSECTION - ALIGNMENT WS1 - OVERHEAD PLANNING STUDY - KEY MAP	SHEET 1 OF 14	1
ST2900	THROUGH WASCO-SHAFTER SUBSECTION - ALIGNMENT WS1 - OVERHEAD PLANNING STUDY - McCOMBS AVE	SHEET 2 OF 14	
ST2911	THROUGH WASCO-SHAFTER SUBSECTION - ALIGNMENT WS1 - OVERHEAD PLANNING STUDY - MERCED AVE	SHEET 3 OF 14	
ST2912	THROUGH WASCO-SHAFTER SUBSECTION - ALIGNMENT WS1 - OVERHEAD PLANNING STUDY - MERCED AVE	SHEET 4 OF 14	
ST2913	THROUGH WASCO-SHAFTER SUBSECTION - ALIGNMENT WS1 - OVERHEAD PLANNING STUDY - POPLAR AVE	SHEET 5 OF 14	
ST2914	THROUGH WASCO-SHAFTER SUBSECTION - ALIGNMENT WS1 - OVERHEAD PLANNING STUDY - POPLAR AVE	SHEET 6 OF 14	
ST2915	THROUGH WASCO-SHAFTER SUBSECTION - ALIGNMENT WS1 - OVERHEAD PLANNING STUDY - FRESNO AVE	SHEET 7 OF 14	
ST2926	THROUGH WASCO-SHAFTER SUBSECTION - ALIGNMENT WS1 - OVERHEAD PLANNING STUDY - BURBANK ST	SHEET 8 OF 14	
ST2927	THROUGH WASCO-SHAFTER SUBSECTION - ALIGNMENT WS1 - OVERHEAD PLANNING STUDY - BURBANK ST	SHEET 9 OF 14	
ST2917	THROUGH WASCO-SHAFTER SUBSECTION - ALIGNMENT WS1 - OVERHEAD PLANNING STUDY - 7TH STANDARD RD	SHEET 10 OF 14	
ST2918	THROUGH WASCO-SHAFTER SUBSECTION - ALIGNMENT WS1 - TYPICAL SECTIONS - 7TH STANDARD RD	SHEET 11 OF 14	
ST2921	THROUGH WASCO-SHAFTER SUBSECTION - ALIGNMENT WS1 - OVERHEAD PLANNING STUDY - KRATZMEYER RD	SHEET 12 OF 14	
ST2922	THROUGH WASCO-SHAFTER SUBSECTION - ALIGNMENT WS1 - OVERHEAD PLANNING STUDY - KRATZMEYER RD	SHEET 13 OF 14	
ST2925	THROUGH WASCO-SHAFTER SUBSECTION - ALIGNMENT WS1 - OVERHEAD PLANNING STUDY - RENFRO RD	SHEET 14 OF 14	

ALIGNMENT WS2 - WASCO-SHAFTER SUBSECTION

DRAWING No	DRAWING DESCRIPTION	SHEET No.	PART No.
SB0180	WASCO-SHAFTER BYPASS SUBSECTION - ALIGNMENT WS2 - OVERHEAD PLANNING STUDY - KEY MAP	SHEET 1 OF 11	1
ST2931	WASCO-SHAFTER BYPASS SUBSECTION - ALIGNMENT WS2 - OVERHEAD PLANNING STUDY - KIMBERLINA AVE	SHEET 2 OF 11	
ST2941	WASCO-SHAFTER BYPASS SUBSECTION - ALIGNMENT WS2 - OVERHEAD PLANNING STUDY - SHAFTER AVE	SHEET 3 OF 11	
ST2951	WASCO-SHAFTER BYPASS SUBSECTION - ALIGNMENT WS2 - OVERHEAD PLANNING STUDY - BEECH AVE	SHEET 4 OF 11	
ST2961	WASCO-SHAFTER BYPASS SUBSECTION - ALIGNMENT WS2 - OVERHEAD PLANNING STUDY - EAST LERDO HWY	SHEET 5 OF 11	
ST2963	WASCO-SHAFTER BYPASS SUBSECTION - ALIGNMENT WS2 - OVERHEAD PLANNING STUDY - CHERRY AVE	SHEET 6 OF 11	
ST2970	WASCO-SHAFTER BYPASS SUBSECTION - ALIGNMENT WS2 - OVERHEAD PLANNING STUDY - 7TH STANDARD RD	SHEET 7 OF 11	
ST2971	WASCO-SHAFTER BYPASS SUBSECTION - ALIGNMENT WS2 - TYPICAL SECTIONS - 7TH STANDARD RD	SHEET 8 OF 11	
ST2972	WASCO-SHAFTER BYPASS SUBSECTION - ALIGNMENT WS2 - OVERHEAD PLANNING STUDY - KRATZMEYER RD	SHEET 9 OF 11	
ST2973	WASCO-SHAFTER BYPASS SUBSECTION - ALIGNMENT WS2 - OVERHEAD PLANNING STUDY - KRATZMEYER RD	SHEET 10 OF 11	
ST2976	WASCO-SHAFTER BYPASS SUBSECTION - ALIGNMENT WS2 - OVERHEAD PLANNING STUDY - RENFRO RD	SHEET 11 OF 11	

ALIGNMENT B1 - BAKERSFIELD URBAN SUBSECTION

DRAWING No	DRAWING DESCRIPTION	SHEET No.	PART No.
SB0190	BAKERSFIELD URBAN SUBSECTION - ALIGNMENT B1 - OVERHEAD PLANNING STUDY - KEY MAP	SHEET 1 OF 3	1
ST2980	BAKERSFIELD URBAN SUBSECTION - ALIGNMENT B1 - OVERHEAD PLANNING STUDY - ROSEDALE HWY/ STATE ROUTE 58	SHEET 2 OF 3	
ST2981	BAKERSFIELD URBAN SUBSECTION - ALIGNMENT B1 - TYPICAL SECTIONS - ROSEDALE HWY/ STATE ROUTE 58	SHEET 3 OF 3	

ALIGNMENT B2 - BAKERSFIELD URBAN SUBSECTION

DRAWING No	DRAWING DESCRIPTION	SHEET No.	PART No.
SB0200	BAKERSFIELD URBAN SUBSECTION - ALIGNMENT B2 - OVERHEAD PLANNING STUDY - KEY MAP	SHEET 1 OF 4	1
ST2982	BAKERSFIELD URBAN SUBSECTION - ALIGNMENT B2 - OVERHEAD PLANNING STUDY - ROSEDALE HWY/ STATE ROUTE 58	SHEET 2 OF 4	
ST2983	BAKERSFIELD URBAN SUBSECTION - ALIGNMENT B2 - TYPICAL SECTIONS - ROSEDALE HWY/ STATE ROUTE 58	SHEET 3 OF 4	
ST2986	BAKERSFIELD URBAN SUBSECTION - ALIGNMENT B2 - OVERHEAD PLANNING STUDY - WESTSIDE PKWY/ COFFEE RD OFF RAMPS	SHEET 4 OF 4	

ALIGNMENT B3 - BAKERSFIELD URBAN SUBSECTION

DRAWING No	DRAWING DESCRIPTION	SHEET No.	PART No.
SB0210	BAKERSFIELD URBAN SUBSECTION - ALIGNMENT B3 - OVERHEAD PLANNING STUDY - KEY MAP	SHEET 1 OF 4	1
ST2984	BAKERSFIELD URBAN SUBSECTION - ALIGNMENT B3 - OVERHEAD PLANNING STUDY - ROSEDALE HWY/ STATE ROUTE 58	SHEET 2 OF 4	
ST2985	BAKERSFIELD URBAN SUBSECTION - ALIGNMENT B3 - TYPICAL SECTIONS - ROSEDALE HWY/ STATE ROUTE 58	SHEET 3 OF 4	
ST2987	BAKERSFIELD URBAN SUBSECTION - ALIGNMENT B3 - OVERHEAD PLANNING STUDY - WESTSIDE PKWY/ COFFEE RD OFF RAMPS	SHEET 4 OF 4	

$USER$ $DATE$ $TIME$ $FILE$

REV	DATE	BY	CHK	APP	DESCRIPTION

DESIGNED BY B. LUSCOMBE
DRAWN BY J. VALENZUELA
CHECKED BY P. TONKIN
IN CHARGE R. COFFIN
DATE 12/31/13

RECORD SET 15% DESIGN SUBMISSION - NOT FOR CONSTRUCTION

URS | HMM | ARUP
CALIFORNIA HIGH-SPEED TRAIN

CALIFORNIA HIGH-SPEED RAIL AUTHORITY

CALIFORNIA HIGH-SPEED TRAIN PROJECT
FRESNO TO BAKERSFIELD
ROADWAY STRUCTURES
INDEX OF SHEETS
SHEET 3 OF 3

CONTRACT NO. HSR 06-0003
DRAWING NO. SB2022
SCALE NO SCALE
SHEET NO. 5 OF 7

A

AB	AGGREGATE BASE
ABBC	ASBESTOS BONDED BITUMINOUS COATED
ABM	AIR-BLOWN MORTAR
ABN	ABANDON
ABUT	ABUTMENT
AC	ASPHALT CONCRETE
ACB	ASPHALT CONCRETE BASE
ACP	ASBESTOS CEMENT PIPE
ADL	ADDED DEAD LOAD
ADJ	ADJUST
AFES	ALTERNATIVE FLARED END SECTION
AHD	AHEAD
ALT	ALTERNATE
AM	TIME FROM MIDNIGHT TO NOON
AP	ALTERNATIVE PIPE
APC	ALTERNATIVE PIPE CULVERT
APPROX	APPROXIMATE
APU	ALTERNATIVE PIPE UNDERDRAIN
ARS	ACCELERATION RESPONSE SPECTRUM
AR	ACCESS RESTRICTION
AS	AGGREGATE SUBBASE
ASRP	ALUMINUM SPIRAL RIB PIPE
ASSY	ASSEMBLY
ATPB	ASPHALT TREATED PERMEABLE BASE
ATPM	ASPHALT TREATED PERMEABLE MATERIAL
AVE	AVENUE
AVG	AVERAGE
@	AT

B

BAGR	BRIDGE APPROACH GUARD RAILING
BB	BEGINNING OF BRIDGE
BC	BEGIN HORIZONTAL CURVE
BCC	BALANCED CANTILEVER CONSTRUCTION
BCR	BEGIN CURB RETURN
BEG	BEGIN
BIT CTD	BITUMINOUS COATED
BK	BACK
BKF	BACKFILL
BLDG	BUILDING
BLM	BRIDGE-LOG MILE
BLVD	BOULEVARD
BM	BENCH MARK
BND	BOUND
BNSF	BURLINGTON NORTH & SANTA FE
BOT	BOTTOM
BR	BRIDGE
BRG	BEARING
BTU	BRITISH THERMAL UNIT
BVC	BEGIN VERTICAL CURVE
BW	BARBED WIRE

C

CAA	CABLE ANCHOR ASSEMBLY
CAP	CORRUGATED ALUMINUM PIPE
CAPA	CORRUGATED ALUMINUM PIPE ARCH
CAS	CONSTRUCTION AREA SIGN
CB	CONCRETE BARRIER
CBW	CONCRETE BLOCK WALL
C-C	CENTER TO CENTER

C CONTINUED

CHSRA	CALIFORNIA HIGH SPEED RAIL AUTHORITY
CHST	CALIFORNIA HIGH SPEED TRAIN
CHSR	CALIFORNIA HIGH SPEED RAIL
CG	CENTER OF GRAVITY
CHNL	CHANNEL
CI	CAST IRON
CIDH	CAST-IN-DRILLED-HOLE
CIP,C-I-P	CAST-IN-PLACE, CAST IRON PIPE
CIPCP	CAST IN PLACE CONCRETE PIPE
CISS	CAST-IN-STEEL-SHELL
CJP	COMPLETE JOINT PENETRATION
CL	CENTERLINE, CLASS
CL2	CLASS 2
CL-6	CHAIN LINK FENCE (6 FT)
CLR	CLEAR, CLEARANCE
CM	CORRUGATED METAL
CMP	CORRUGATED METAL PIPE
CO	COUNTY
COL	COLUMN
CONC	CONCRETE
COND	CONDUIT
CONN	CONNECTOR
CONST	CONSTRUCT, CONSTRUCTION
CONT	CONTINUOUS
COORD	COORDINATE
CP	CLEARANCE POINT
CR	CREEK
CRCP	CONTINUOUS REINFORCED CONCRETE PAVEMENT
CRSP	CONCRETED ROCK SLOPE PROTECTION
CS	CURVE TO SPIRAL
CSP	CORRUGATED STEEL PIPE
CSPA	CORRUGATED STEEL PIPE ARCH
CTB	CEMENT TREATED BASE
CTPB	CEMENT TREATED PERMEABLE BASE
CTPM	CEMENT TREATED PERMEABLE MATERIAL
CTRS	CENTERS
CVFPB	CENTRAL VALLEY FLOOD PROTECTION BOARD
CULV	CULVERT
℄	CENTERLINE

D

D	DEPTH
DD	DOWNDRAIN, DIRECTIVE DRILLING
DBL	DOUBLE
DEG	DEGREE
DEL	DELINEATOR
DET	DETAIL, DETOUR
DF	DOUGLAS FIR
DI	DRAINAGE INLET, DROP INLET
DIA	DIAMETER
DIAPH	DIAPHRAGM
DIST	DISTANCE, DISTRICT
DMBB	DOUBLE METAL BEAM BARRIER
DR	DRIVE
DTBB	DOUBLE THRIE BEAM BARRIER
DWY	DRIVEWAY

E

E	EAST, EASTING
EA	ACTUAL SUPERELEVATION
EU	UNBALANCED SUPERELEVATION

E CONTINUED

EASE	EASEMENT
EB	END OF BRIDGE, EASTBOUND
EC	END HORIZONTAL CURVE
ECR	END CURB RETURN
ED	EDGE DRAIN
EDC	EDGE DRAIN CLEANOUT
EDO	EDGE DRAIN OUTLET
EDV	EDGE DRAIN VENT
ELEC	ELECTROLIER
ELECT	ELECTRIC
ELEV	ELEVATION
EMB	EMBANKMENT
ENGR	ENGINEER
EOD	EDGE OF DECK
EP	EDGE OF PAVEMENT
EQ	EQUATION, EQUAL
ES	EDGE OF SHOULDER
ETW	EDGE OF TRAVELED WAY
EVC	END VERTICAL CURVE
EW	ENDWALL
EXC	EXCAVATION
EXIST, EX.	EXISTING
EXP	EXPANSION
EXP JT	EXPANSION JOINT
EXWY	EXPRESSWAY
EXT	EXTERIOR

F

F & C	FRAME AND COVER
F & G	FRAME AND GRATE
FB	FLOOR BEAM
F-B	FRESNO TO BAKERSFIELD
FDN	FOUNDATION
FEBT	FACING EASTBOUND TRAFFIC
FES	FLARED END SECTION
FF	FILTER FABRIC
FG	FINISHED GRADE
FH	FIRE HYDRANT
FIG	FIGURE
FL	FLOW LINE
FNBT	FACING NORTHBOUND TRAFFIC
FOC	FACE OF CONCRETE
FR RD	FRONTAGE ROAD
FS	FAR SIDE, FINISHED SURFACE
FSBT	FACING SOUTHBOUND TRAFFIC
FT	FOOT, FEET
FTG	FOOTING
FWBT	FACING WESTBOUND TRAFFIC
FWY	FREEWAY
FPLM	FULL SPAN PRECAST LAUNCHING METHOD

G

G	ACCELERATION DUE TO GRAVITY
GA	GAGE
GALV	GALVANIZED
GP	GRADING PLANE
GR	GUARD RAILING
GSP	GALVANIZED STEEL PIPE
GTR	GUTTER

H

H	HEIGHT
HR	HOUR
HD	HORIZONTAL DRAIN
HDWL	HEADWALL
HEX HD	HEXAGONAL HEAD
HMA	HOT MIXED ASPHALT
HORIZ	HORIZONTAL
HP	HINGE POINT, HORSEPOWER
HPS	HIGH PERFORMANCE STEEL
HS	HIGH STRENGTH
HST	HIGH SPEED TRAIN
HSR	HIGH SPEED RAIL
HW	HEADWALL, HIGH WATER
HWM	HIGH WATER MARK
HWY	HIGHWAY

I

IB	IMPORTED BORROW
ID	INSIDE DIAMETER
IF	INSIDE FACE
IN	INCH, INCHES
INT	INTERIOR
INV	INVERT
IRR	IRRIGATION

J

JCT	JUNCTION
JP	JOINT POLE
JPCP	JOINTED PLAIN CONCRETE PAVEMENT
JS	JUNCTION STRUCTURE
JT	JOINT

K

K	DISTANCE TO ACHIEVE 1% GRADE CHANGE

L

L	LENGTH
LAT	LATITUDE
LCB	LEAN CONCRETE BASE
LN	LANE
LOC	LOCATION
LOL	LAYOUT LINE
LONG	LONGITUDE
LONGIT	LONGITUDINAL
LS	LENGTH OF SPIRAL
LC	LENGTH OF CURVE
LT	LEFT

M

MAINT	MAINTENANCE
MAX	MAXIMUM
MB	METAL BEAM
MBB	METAL BEAM BARRIER
MBGR	METAL BEAM GUARD RAILING
MED	MEDIAN
M-F	MERCED TO FRESNO
MH	MANHOLE
MIN	MINIMUM
MISC	MISCELLANEOUS
MISC I & S	MISCELLANEOUS IRON AND STEEL
MKR	MARKER
M/L	MAIN LINE (RAILWAY)

M CONTINUED

MOD	MODIFIED, MODIFY
MON	MONUMENT
MP	METAL PLATE
MPGR	METAL PLATE GUARD RAILING
MPH	MILES PER HOUR
MR	MOVEMENT RATING
MSE	MECHANICALLY STABILIZED EARTH
MTL	MATERIAL
MSS	MOVING SCAFFOLDING SYSTEM

N

N	NORTH, NORTHING
NB	NORTHBOUND
NO.	NUMBER (MUST HAVE PERIOD)
NOS.	NUMBERS (MUST HAVE PERIOD)
NPS	NOMINAL PIPE SIZE
NS	NEAR SIDE
NTS	NOT TO SCALE
N/A	NOT APPLICABLE

O

OBLR	OBLITERATE
OC	OVERCROSSING
OCS	OVERHEAD CONTACT SYSTEM
OD	OUTSIDE DIAMETER
OF	OUTSIDE FACE
OG	ORIGINAL GROUND
OGAC	OPEN GRADED ASPHALT CONCRETE
OH	OVERHEAD
O-O	OUT TO OUT
OPP	OPPOSITE

P

P	PAGE
PAP	PERFORATED ALUMINUM PIPE
PB	PULL BOX
PC	POINT OF CURVATURE, PRECAST
PCC	POINT OF COMPOUND CURVE, PORTLAND CEMENT CONCRETE
PCP	PERFORATED CONCRETE PIPE, PRESTRESSED CONCRETE PIPE
PCVC	POINT OF COMPOUND VERTICAL CURVE
PED	PEDESTRIAN
PED OC	PEDESTRIAN OVERCROSSING
PED UC	PEDESTRIAN UNDERCROSSING
PERM MTL	PERMEABLE MATERIAL
PG	PROFILE GRADE
PI	POINT OF INTERSECTION
PJP	PARTIAL JOINT PENETRATION
₱,PL	PLATE
P/L	PROPERTY LINE
PM	POST MILE, TIME FROM NOON TO MIDNIGHT
PN	PAVING NOTCH
POB	POINT OF BEGINNING
POC	POINT OF HORIZONTAL CURVE
POE	POINT OF ENDING
POT	POINT OF TANGENT
POVC	POINT OF VERTICAL CURVE
PP	PIPE PILE, PLASTIC PIPE, POWER POLE
PPL	PREFORMED PERMEABLE LINER
PPP	PERFORATED PLASTIC PIPE
PRC	POINT OF REVERSE CURVE

$FILE$
$TIME$
$DATE$
$USER$

REV	DATE	BY	CHK	APP	DESCRIPTION

DESIGNED BY K. SEYMOUR
DRAWN BY P. TONKIN
CHECKED BY D. HUNT
IN CHARGE R. COFFIN
DATE 12/31/13

RECORD SET 15% DESIGN SUBMISSION - NOT FOR CONSTRUCTION

URS | HMM | ARUP
CALIFORNIA HIGH-SPEED TRAIN

CALIFORNIA HIGH-SPEED RAIL AUTHORITY

CALIFORNIA HIGH-SPEED TRAIN PROJECT
FRESNO TO BAKERSFIELD
GENERAL
ABBREVIATIONS AND LEGENDS
SHEET 1 OF 2

CONTRACT NO. HSR 06-0003
DRAWING NO. CB0010
SCALE NO SCALE
SHEET NO. 6 OF 7

P CONTINUED

PRF	PAVEMENT REINFORCING FABRIC
PRVC	POINT OF REVERSE VERTICAL CURVE
PS&E	PLANS, SPECIFICATIONS AND ESTIMATES
PS, P/S	PRESTRESSED, PARALLEL STATION
PSP	PERFORATED STEEL PIPE
PT	POINT OF TANGENCY
PVC	POLYVINYL CHLORIDE
PVI	POINT OF VERTICAL INTERSECTION
PVMT	PAVEMENT
PVP	MAINTENANCE VEHICLE PULLOUT

Q

QTY	QUANTITY

R

R	RADIUS
R & D	REMOVE AND DISPOSE
R & S	REMOVE AND SALVAGE
R/C	RATE OF CHANGE
RCA	REINFORCED CONCRETE ARCH
RCB	REINFORCED CONCRETE BOX
RCP	REINFORCED CONCRETE PIPE
RCPA	REINFORCED CONCRETE PIPE ARCH
RD	ROAD
REINF	REINFORCED, REINFORCEMENT, REINFORCING
REL	RELOCATE
REPL	REPLACEMENT
RET	RETAINING
REV	REVISED
RDWY	ROADWAY
RM	ROAD-MIXED
RP	RADIUS POINT, REFERENCE POINT
RR	RAILROAD
RSP	ROCK SLOPE PROTECTION
RT	RIGHT
RTE	ROUTE
RW	REDWOOD, RETAINING WALL
R/W, ROW	RIGHT OF WAY
RWY	RAILWAY

S

S	SOUTH, SUPPLEMENT
SAE	STRUCTURE APPROACH EMBANKMENT
SALV	SALVAGE
SAPP	STRUCTURAL ALUMINUM PLATE PIPE
SB	SOUTHBOUND
SC	SPIRAL TO CURVE
SCSP	SLOTTED CORRUGATED STEEL PIPE
SD	STORM DRAIN
SEC	SECOND
SECT	SECTION
SEP	SEPARATION
SG	SUBGRADE
SHLD	SHOULDER
SHT	SHEET
SIM	SIMILAR
S	STATION LINE
SM	SELECTED MATERIAL
SPEC	SPECIAL, SPECIFICATIONS
SPP	SLOTTED PLASTIC PIPE
SS	SLOPE STAKE, SPIRAL TO SPIRAL

S CONTINUED

SSBM	STRAP AND SADDLE BRACKET METHOD
SSD	STRUCTURAL SECTION DRAIN
SSPA	STRUCTURAL STEEL PLATE ARCH
SSPP	STRUCTURAL STEEL PLATE PIPE
SSPPA	STRUCTURAL STEEL PLATE PIPE ARCH
SSRP	STEEL SPIRAL RIB PIPE
SR	STATE ROUTE
ST	STREET, SPIRAL TO TANGENT
STA	STATION
STBB	SINGLE THRIE BEAM BARRIER
STD	STANDARD
STR	STRUCTURE
SRS	STAND ALONE RADIO SITE
SURF	SURFACING
SW	SIDEWALK, SOUND WALL
SWR	SEWER
SWS	SWITCHING STATION
SYM	SYMMETRICAL
S4S	SURFACE 4 SIDES
SJVR	SAN JOAQUIN VALLEY RAILROAD

T

T	SEMI-TANGENT
TAB	TABLET
TAN	TANGENT
TBB	THRIE BEAM BARRIER
TBR	TIMBER
TC	TOP OF CURB, TANGENT TO CURVE
TCB	TRAFFIC CONTROL BOX
TEL	TELEPHONE
TEMP	TEMPORARY
TG	TOP OF GRADE
TOT	TOTAL
TM	TECHNICAL MEMORANDUM
TP	TELEPHONE POLE
TPB	TREATED PERMEABLE BASE
TPM	TREATED PERMEABLE MATERIAL
TPSS	TRACTION POWER SUPPLY STATION
TRANS	TRANSITION, TRANSVERSE
TS	TRAFFIC SIGNAL, TUBULAR STEEL, TANGET TO SPIRAL
TYP	TYPICAL
TOR	TOP OF RAIL

U

UC	UNDERCROSSING
UD	UNDERDRAIN
UON	UNLESS OTHERWISE NOTED
UP	UNDERPASS
UPRR	UNION PACIFIC RAILROAD
USFWS	UNITED STATES FISH AND WILDLIFE SERVICE

V

V	VALVE, DESIGN SPEED
VAR	VARIABLE
VC	VERTICAL CURVE
VCP	VITRIFIED CLAY PIPE
VERT	VERTICAL
VIA	VIADUCT
VOL	VOLUME

W

W	WEST, WIDTH
WB	WESTBOUND
WH	WEEP HOLE
WM	WIRE MESH
WS	WATER SURFACE
WSP	WELDED STEEL PIPE
WT	WEIGHT
WV	WATER VALVE
WW	WINGWALL
WWLOL	WINGWALL LAYOUT LINE
W/	WITH

X

X SEC	CROSS SECTION
XING	CROSSING

Y

YR	YEAR
YRS	YEARS

LEGEND

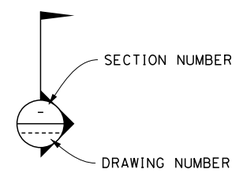

—E—	PROPOSED ELECTRICITY LINE
—e—	EXISTING ELECTRICITY LINE
—e—(oh)—	EXISTING OVERHEAD ELECTRICITY LINE
—E—(OH)—	PROPOSED OVERHEAD ELECTRICTY LINE
— — —	PROPOSED HST RIGHT OF WAY
— — — —	PROPOSED HST TRACK CENTERLINE
▲—▲	RETAINING WALL
- - - - - - -	TOE OF SLOPE / TOP OF CUT

CONTROL LINE EXAMPLE "A" LINE

255+00 260+00 265+00

OR	TRACK (PLAN AND ELEVATION)
REL	TRACK TO BE REMOVED AND RELOCATED PER BNSF
	REMOVE BASE & SURFACING
	SOUND BARRIER (POTENTIAL)
	DIRECTION OF FLOW
	WATER SURFACE

GENERAL NOTES

1. TRACK PROFILE IS DESIGNED AS TOP OF THE LOW RAIL. VERTICAL CLEARANCE REQUIREMENTS ARE MEASURED FROM THE TOP OF THE HIGH RAIL ON SUPERELEVATED TRACK. THE CLEARANCE ENVELOPES SHOWN DEMONSTRATE THE MINIMUM CLEARANCE REQUIREMENTS.

2. MINIMUM VERTICAL CLEARANCE REQUIREMENTS TO CANALS AND DITCHES ARE NOT KNOWN. FURTHER CONSULTATION WITH THE WATERCOURSE OWNERS WILL BE REQUIRED TO DETERMINE NECESSARY CLEARANCES.

3. THE FOLLOWING ARE ROADWAY DESIGN STANDARDS AND GUIDELINES:
   A. CALTRANS HIGHWAY DESIGN MANUAL (2012)
   B. AASHTO A POLICY ON GEOMETRIC DESIGN OF HIGHWAYS AND STREETS (2011)
   C. AASHTO ROADSIDE DESIGN GUIDE (2011)
   D. APPLICABLE LOCAL DESIGN STANDARD AND GUIDELINES (I.E., CITY OF FRESNO)

4. THE FEMA FLOODPLAIN BOUNDARIES ARE CALLED OUT AS "LIMIT OF 100YR FEMA FLOODPLAIN". THE LIMITS OF THE MODELED 100 YEAR WATER SURFACE ELEVATIONS (WSE) ARE APPROXIMATE AND ARE MARKED WITH THE NAME OF THE WATERBODY ASSOCIATED WITH THE MODELED FLOODING, E.G. "LIMIT OF POSO CREEK FLOODPLAIN".

5. THE STRUCTURE DESIGN ASSUMES THAT THE DEPTH FROM TOR TO TOP OF DECK IS 2'-6" THROUGHOUT. HOWEVER, WHERE BALLASTED TRACK FORM IS USED, THE HEIGHT FROM TOR TO DECK SHALL BE 2'-9" PLUS AN ALLOWANCE FOR WATERPROOF MEMBRANE, AND PROTECTION LAYER IF REQUIRED. FOR SLAB TRACKFORM, THE HEIGHT FROM TOR TO DECK SHALL BE 2'-6" PLUS AN ALLOWANCE FOR WATERPROOF MEMBRANE AND PROTECTION LAYER IF REQUIRED.

6. WHERE THE VERTICAL ALIGNMENT GRADE IS LESS THAN 0.5% THE UPPER SURFACE OF THE VIADUCT STRUCTURE SHALL BE PROFILED TO GIVE A MINIMUM LONGITUDINAL FALL OF 0.5%. TYPICALLY FOR A SPAN OF 120'-00" ON A 0% GRADE SECTION OF VIADUCT THIS COULD BE ACHIEVED BY MODIFYING THE CROSS SLOPE OF THE GIRDER LINEARLY BETWEEN 0.8% AT MID-SPAN TO 2% AT EACH END.

7. WHEN LATERAL SEPARATION BETWEEN THE CONVENTIONAL RAILROAD AND HST SYSTEM IS LESS THAN 102', A SITE SPECIFIC HAZARD ANALYSIS WILL BE CONDUCTED TO DETERMINE WHAT SPECIFIC COLLISION PROTECTION MEASURES MAY NEED TO BE IMPLEMENTED.

8. RIP-RAP PROTECTION IS REQUIRED FOR EMBANKMENTS WITHIN FEMA SPECIAL FLOOD HAZARD ZONES, IN ACCORDANCE WITH DESIGN CRITERIA.

9. HST ALIGNMENT CONTROL LINE IS DESIGNED AS THE CENTERLINE BETWEEN THE TWO MAINLINE TRACKS.

10. TRACK FORM USED IN TYPICAL SECTIONS IS INDICATIVE.

	DIRECTION OF TRAFFIC
1	LINE DATA
	POINT OF MINIMUM VERTICAL CLEARANCE
	ROAD CLOSURE (ROADWAYS)
1	CURVE DATA (ALIGNMENTS)
3	CURVE DATA (STRUCTURES)
	EXISTING HIGH VOLTAGE TOWER FOOTPRINT
	OG / ORIGINAL GROUND

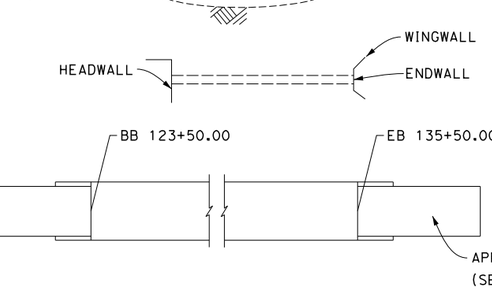

REV	DATE	BY	CHK	APP	DESCRIPTION

DESIGNED BY K. SEYMOUR
DRAWN BY P. TONKIN
CHECKED BY D. HUNT
IN CHARGE R. COFFIN
DATE 12/31/13

RECORD SET 15% DESIGN SUBMISSION - NOT FOR CONSTRUCTION

URS | HMM | ARUP
CALIFORNIA HIGH-SPEED TRAIN

CALIFORNIA HIGH-SPEED RAIL AUTHORITY

CALIFORNIA HIGH-SPEED TRAIN PROJECT
FRESNO TO BAKERSFIELD
GENERAL
ABBREVIATIONS AND LEGENDS
SHEET 2 OF 2

CONTRACT NO. HSR 06-0003
DRAWING NO. CB0011
SCALE NO SCALE
SHEET NO. 7 OF 7

$USER$ $DATE$ $TIME$ $FILE$

12/30/2013 3:14:11 PM c:\pwworking\hmm\external\bar50597\dms91103\FB-SB-0040-F1.dgn

BAR50597

REV	DATE	BY	CHK	APP	DESCRIPTION

DESIGNED BY L. SMITH
DRAWN BY D. BARNHART
CHECKED BY B. LUSCOMBE
IN CHARGE R. COFFIN
DATE 12/31/13

RECORD SET 15% DESIGN SUBMISSION - NOT FOR CONSTRUCTION

URS | HMM | ARUP
CALIFORNIA HIGH-SPEED TRAIN

CALIFORNIA HIGH-SPEED RAIL AUTHORITY

CALIFORNIA HIGH-SPEED TRAIN PROJECT FRESNO TO BAKERSFIELD

FRESNO SUBSECTION
ALIGNMENT F1
OVERHEAD PLANNING STUDY
KEY MAP

CONTRACT NO. HSR 06-0003
DRAWING NO. SB0040
SCALE AS SHOWN
SHEET NO. 1 OF 13

FOR NOTES AND LEGEND, SEE SHEET ST2012

PROFILE GRADE
NO SCALE

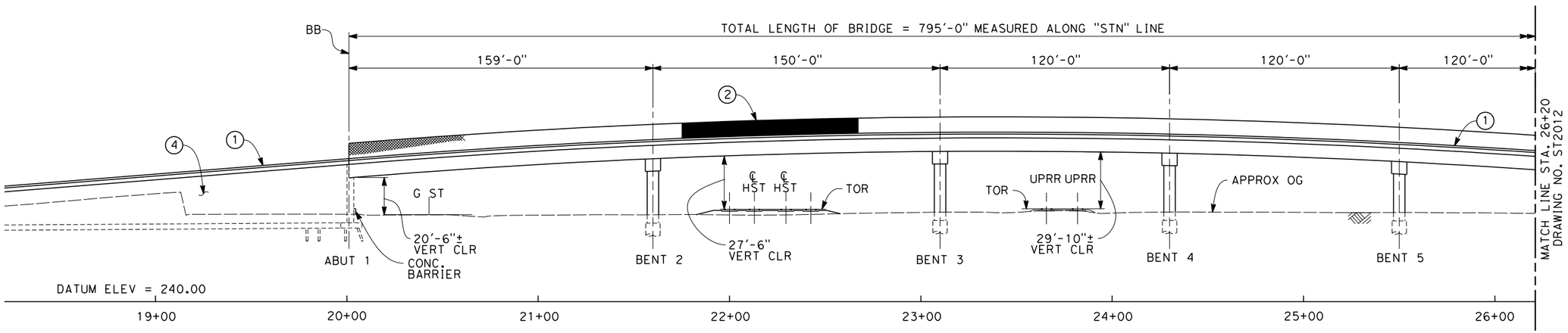

ELEVATION
SCALE: 1"=30'

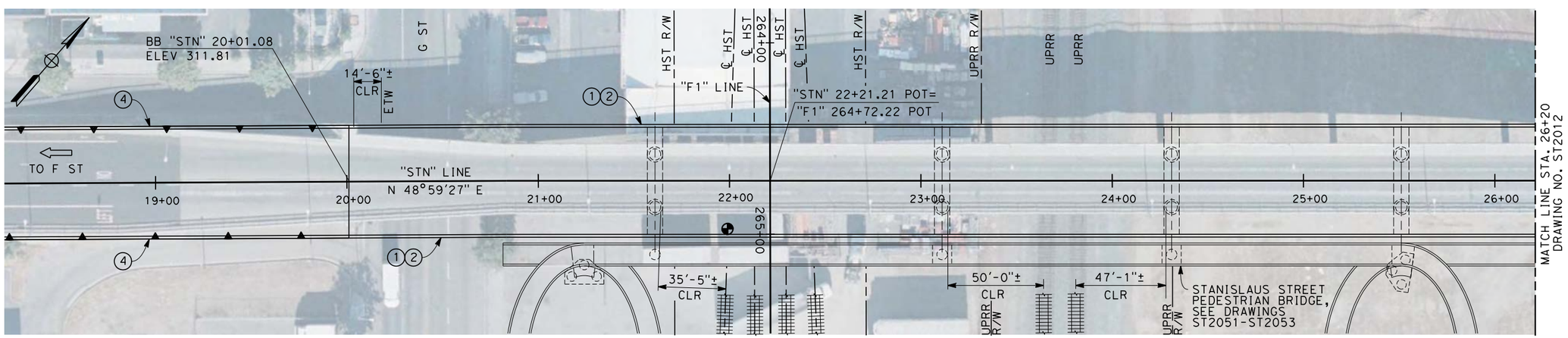

PLAN
SCALE: 1"=30'

30 0 30 60
1"=30'

REV	DATE	BY	CHK	APP	DESCRIPTION

DESIGNED BY L. SMITH
DRAWN BY D. BARNHART
CHECKED BY E. MORAN
IN CHARGE R. COFFIN
DATE 12/31/13

RECORD SET 15% DESIGN SUBMISSION - NOT FOR CONSTRUCTION

URS | HMM | ARUP
CALIFORNIA HIGH-SPEED TRAIN

CALIFORNIA HIGH-SPEED RAIL AUTHORITY

CALIFORNIA HIGH-SPEED TRAIN PROJECT
FRESNO TO BAKERSFIELD
FRESNO SUBSECTION
ALIGNMENT F1
OVERHEAD PLANNING STUDY
STANISLAUS ST

CONTRACT NO. HSR 06-0003
DRAWING NO. ST2011
SCALE AS SHOWN
SHEET NO. 2 OF 13

12/30/2013 3:01:35 PM c:\pwworking\hmm\external\bar50597\dms91103\VFB-ST-2011-F1.dgn
BAR50597

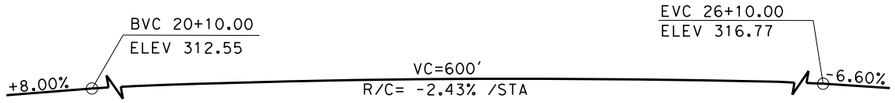

PROFILE GRADE
NO SCALE

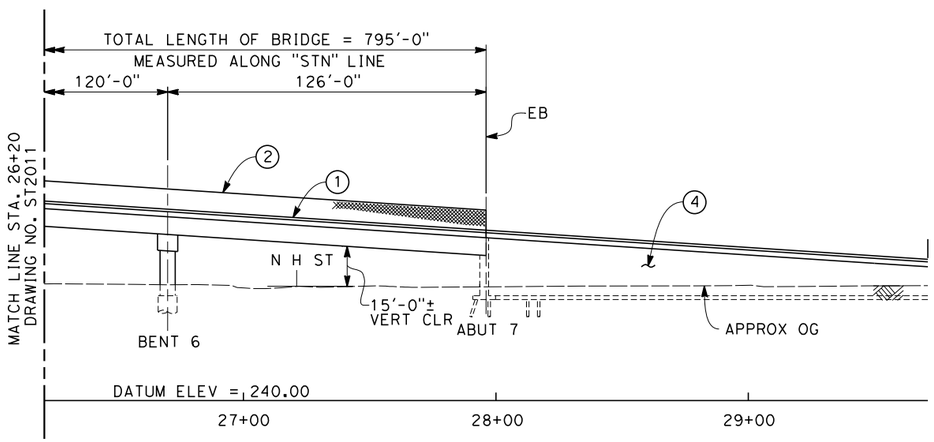

ELEVATION
SCALE: 1"=30'

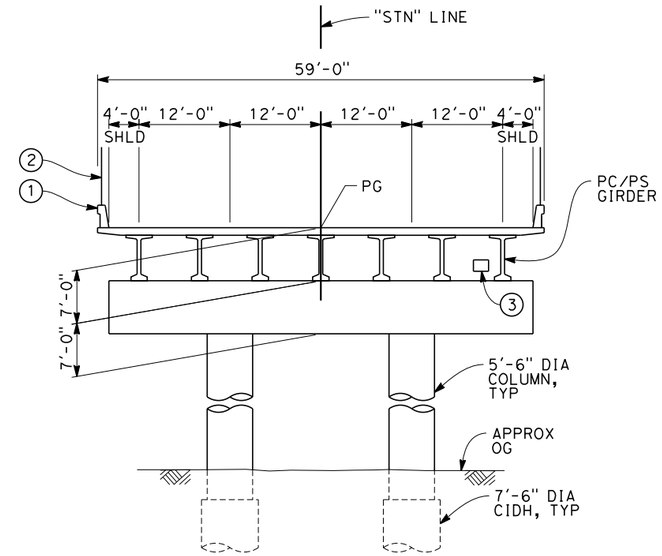

SECTION A
SCALE: 1"=10'

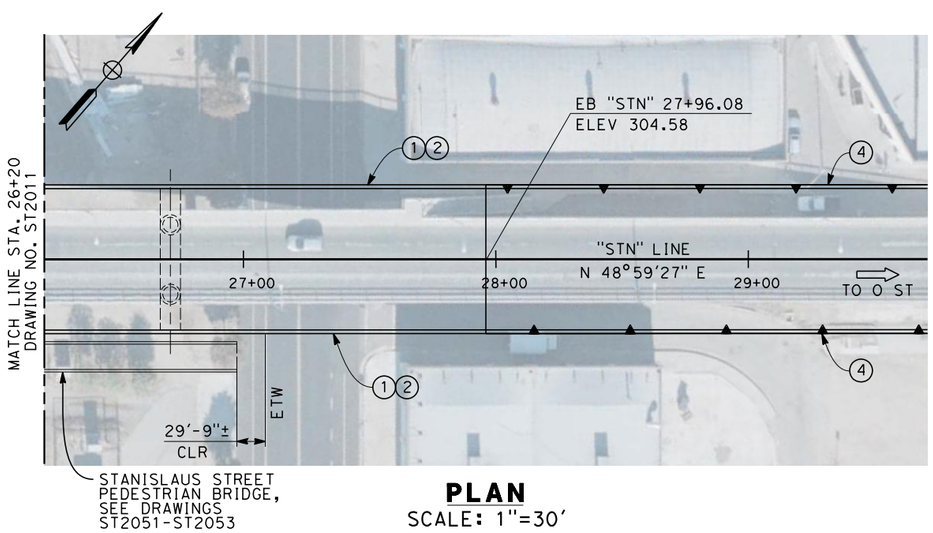

PLAN
SCALE: 1"=30'

NOTES:

1. ALL PILES NOT SHOWN
2. FOR MINIMUM VERTICAL CLEARANCES, HORIZONTAL CURVE DATA, AND DETAILS NOT SHOWN, SEE ROADWAY PLANS.

LEGEND:

1. CONCRETE BARRIER WITH AR FENCE
2. AR FENCE WITH SOLID PLATE OVER HST
3. FUTURE UTILITY ENCASEMENT OPENING
4. RETAINING WALL W/ BARRIER

10 0 10 20 — 1"=10'

30 0 30 60 — 1"=30'

REV	DATE	BY	CHK	APP	DESCRIPTION

DESIGNED BY L. SMITH
DRAWN BY D. BARNHART
CHECKED BY E. MORAN
IN CHARGE R. COFFIN
DATE 12/31/13

RECORD SET 15% DESIGN SUBMISSION - NOT FOR CONSTRUCTION

URS | HMM | ARUP
CALIFORNIA HIGH-SPEED TRAIN

CALIFORNIA HIGH-SPEED RAIL AUTHORITY

CALIFORNIA HIGH-SPEED TRAIN PROJECT
FRESNO TO BAKERSFIELD
FRESNO SUBSECTION
ALIGNMENT F1
OVERHEAD PLANNING STUDY
STANISLAUS ST

CONTRACT NO. HSR 06-0003
DRAWING NO. ST2012
SCALE AS SHOWN
SHEET NO. 3 OF 13

12/30/2013 3:02:25 PM c:\pwworking\hmm\external\bar50597\dms91103\VFB-ST-2012-F1.dgn
BAR50597

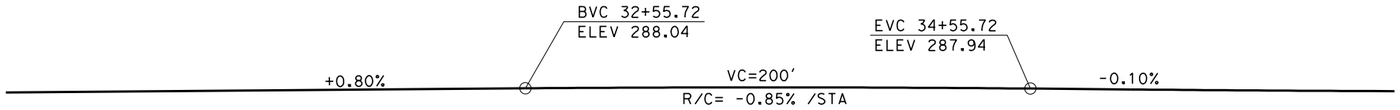

PROFILE GRADE
NO SCALE

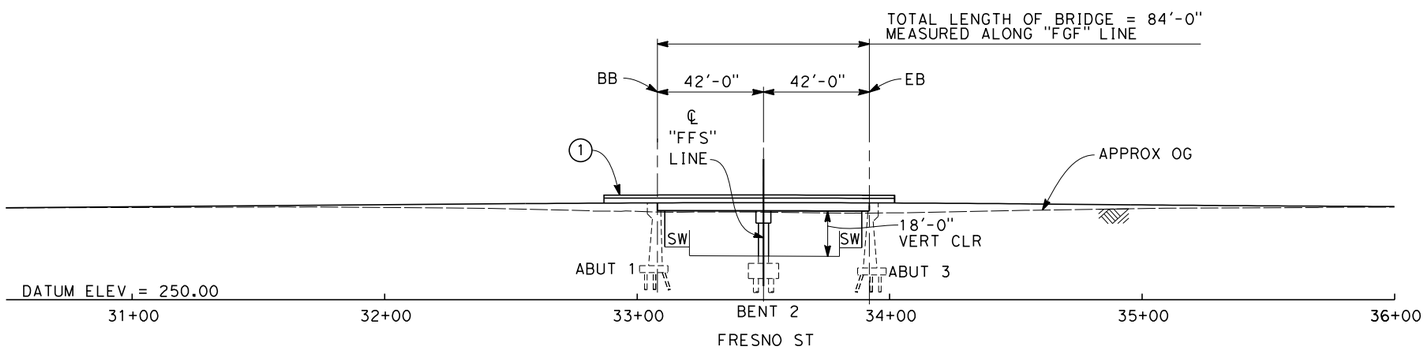

ELEVATION
SCALE: 1"=30'

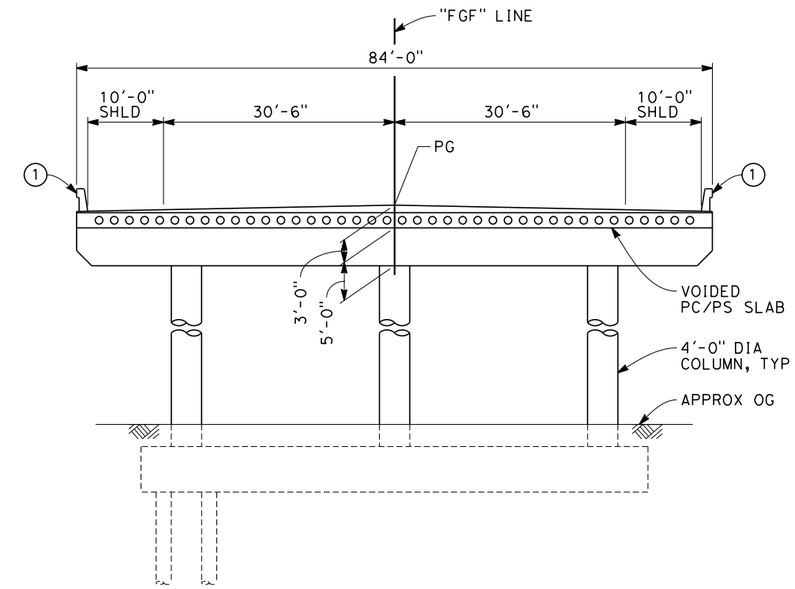

TYPICAL SECTION
SCALE: 1"=10'

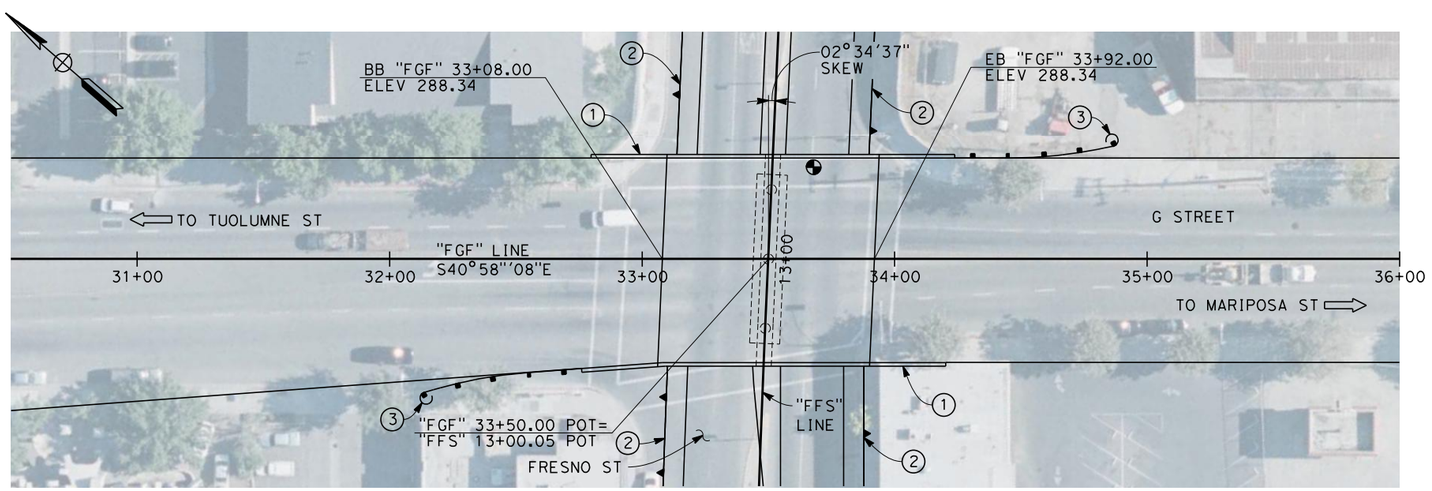

PLAN
SCALE: 1"=30'

NOTES:

1. ALL PILES NOT SHOWN
2. FOR MINIMUM VERTICAL CLEARANCES, HORIZONTAL CURVE DATA, AND DETAILS NOT SHOWN, SEE ROADWAY PLANS.

LEGEND:

1. CONCRETE BARRIER
2. RETAINING WALL
3. MBGR

10 0 10 20 — 1"=10'

30 0 30 60 — 1"=30'

REV	DATE	BY	CHK	APP	DESCRIPTION

DESIGNED BY L. SMITH
DRAWN BY D. BARNHART
CHECKED BY E. MORAN
IN CHARGE R. COFFIN
DATE 12/31/13

RECORD SET 15% DESIGN SUBMISSION - NOT FOR CONSTRUCTION

URS | HMM | ARUP
CALIFORNIA HIGH-SPEED TRAIN

CALIFORNIA HIGH-SPEED RAIL AUTHORITY

CALIFORNIA HIGH-SPEED TRAIN PROJECT
FRESNO TO BAKERSFIELD
FRESNO SUBSECTION
ALIGNMENT F1
UNDERPASS PLANNING STUDY
FRESNO ST

CONTRACT NO. HSR 06-0003
DRAWING NO. ST2015
SCALE AS SHOWN
SHEET NO. 4 OF 13

12/30/2013 3:03:09 PM c:\pwworking\hmm\external\bar50597\dms91103\FB-ST-2015-F1.dgn
BAR50597

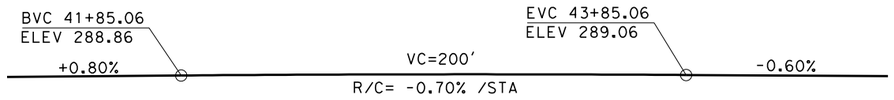

PROFILE GRADE
NO SCALE

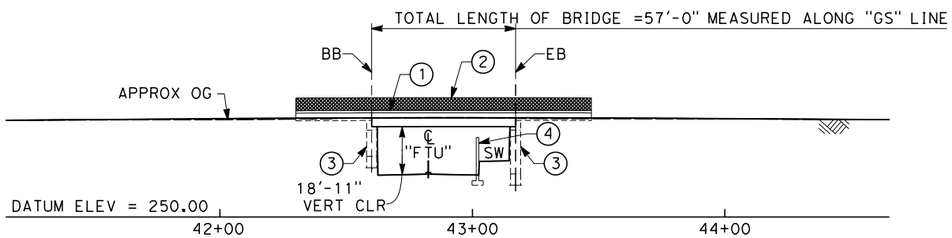

ELEVATION
SCALE: 1"=30'

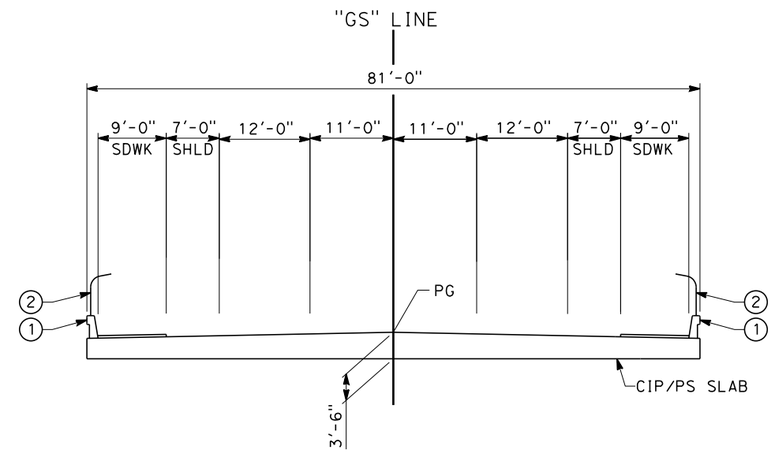

TYPICAL SECTION
SCALE: 1"=10'

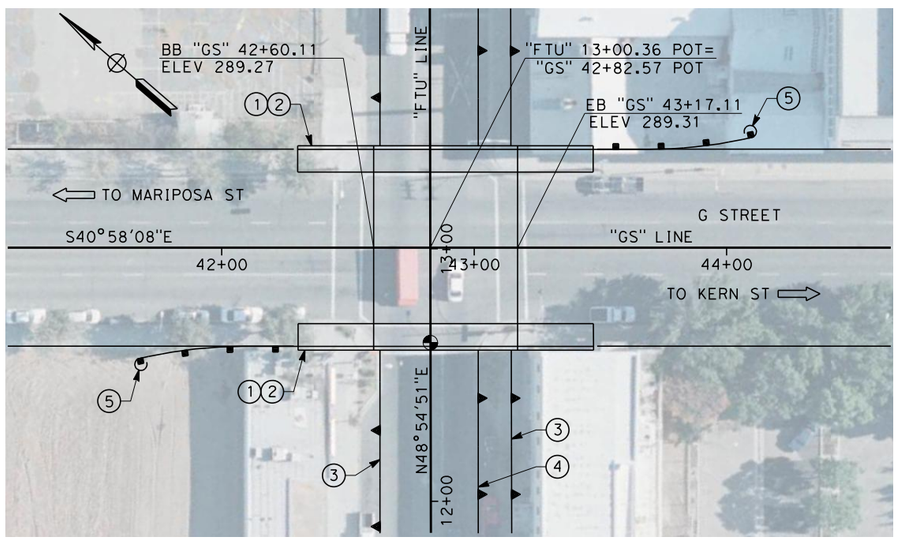

PLAN
SCALE: 1"=30'

NOTES:

1. ALL PILES NOT SHOWN
2. FOR MINIMUM VERTICAL CLEARANCES, HORIZONTAL CURVE DATA, AND DETAILS NOT SHOWN, SEE ROADWAY PLANS.

LEGEND:

1. CONCRETE BARRIER WITH AR FENCE
2. AR FENCE
3. TANGENT PILE RETAINING WALL
4. RETAINING WALL
5. MBGR

10 0 10 20 — 1"=10'

30 0 30 60 — 1"=30'

REV	DATE	BY	CHK	APP	DESCRIPTION

DESIGNED BY L. SMITH
DRAWN BY D. BARNHART
CHECKED BY B. LUSCOMBE
IN CHARGE R. COFFIN
DATE 12/31/13

RECORD SET 15% DESIGN SUBMISSION - NOT FOR CONSTRUCTION

URS | HMM | ARUP
CALIFORNIA HIGH-SPEED TRAIN

CALIFORNIA HIGH-SPEED RAIL AUTHORITY

CALIFORNIA HIGH-SPEED TRAIN PROJECT
FRESNO TO BAKERSFIELD
FRESNO SUBSECTION
ALIGNMENT F1
UNDERPASS PLANNING STUDY
TULARE ST

CONTRACT NO. HSR 06-0003
DRAWING NO. ST2018
SCALE AS SHOWN
SHEET NO. 5 OF 13

BAR50597 12/30/2013 3:07:09 PM CAHSRP-r1.tbl CHSR_PDF_half_black.pltc:\pwworking\hmm\external\bar50597\dms91103\FB-ST-2018-F1.dgn

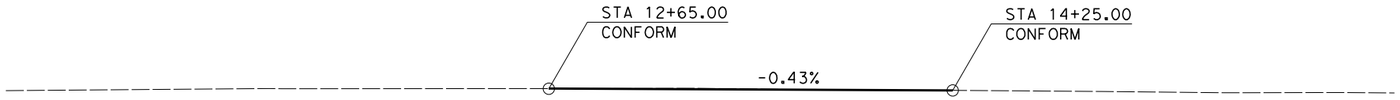

PROFILE GRADE
NO SCALE

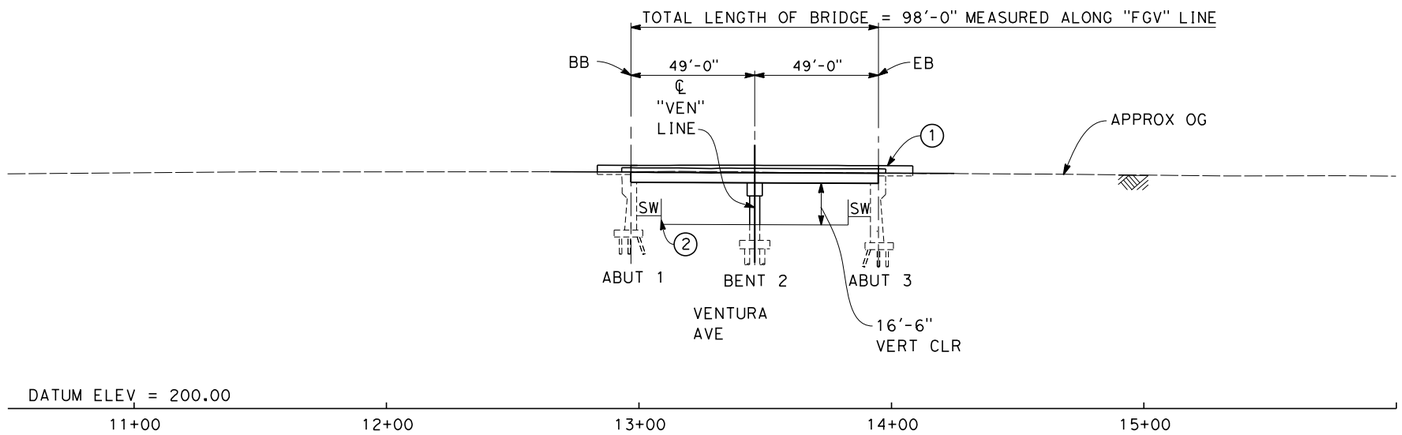

ELEVATION
SCALE: 1"=30'

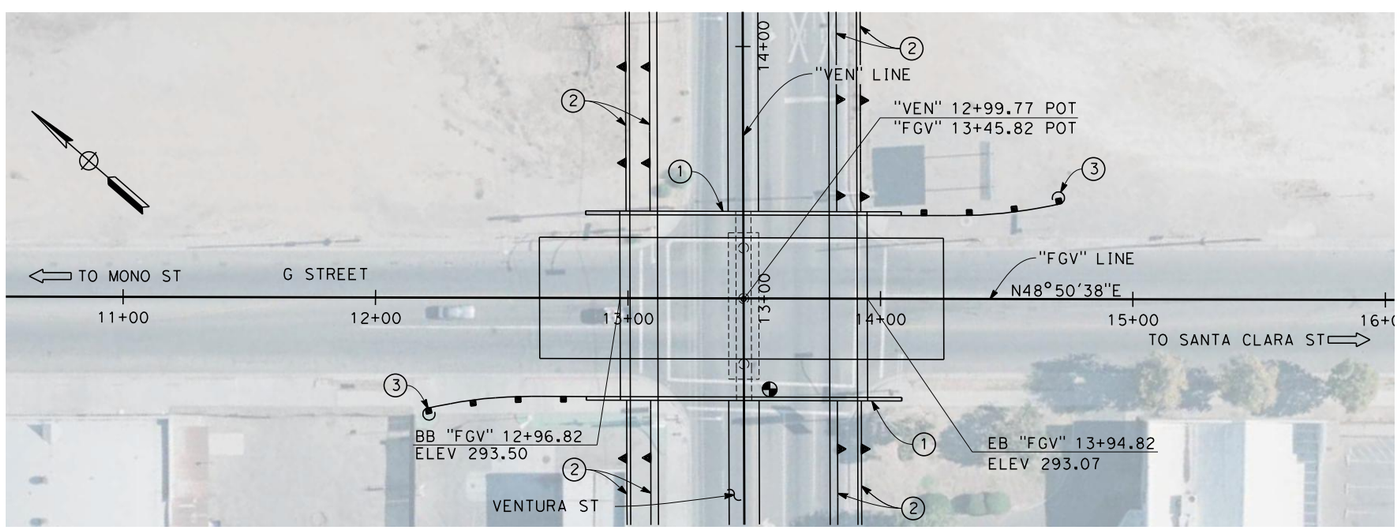

PLAN
SCALE: 1"=30'

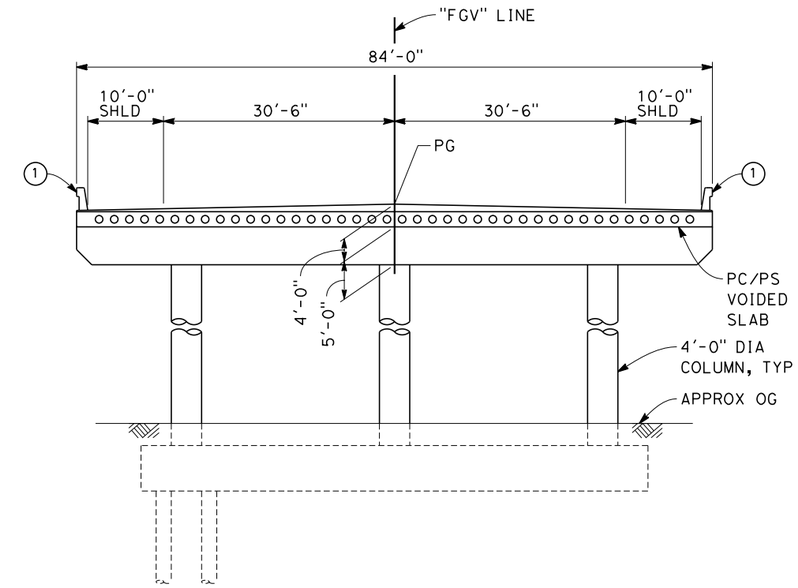

TYPICAL SECTION
SCALE: 1"=10'

NOTES:

1. ALL PILES NOT SHOWN
2. FOR MINIMUM VERTICAL CLEARANCES, HORIZONTAL CURVE DATA, AND DETAILS NOT SHOWN, SEE ROADWAY PLANS.

LEGEND:

(1) CONCRETE BARRIER

(2) RETAINING WALL

(3) MBGR

10 0 10 20 — 1"=10'

30 0 30 60 — 1"=30'

REV	DATE	BY	CHK	APP	DESCRIPTION

DESIGNED BY L. SMITH
DRAWN BY D. BARNHART
CHECKED BY E. MORAN
IN CHARGE R. COFFIN
DATE 12/31/13

RECORD SET 15% DESIGN SUBMISSION - NOT FOR CONSTRUCTION

URS | HMM | ARUP
CALIFORNIA HIGH-SPEED TRAIN

CALIFORNIA HIGH-SPEED RAIL AUTHORITY

CALIFORNIA HIGH-SPEED TRAIN PROJECT
FRESNO TO BAKERSFIELD
FRESNO SUBSECTION
ALIGNMENT F1
UNDERPASS PLANNING STUDY
VENTURA ST

CONTRACT NO. HSR 06-0003
DRAWING NO. ST2021
SCALE AS SHOWN
SHEET NO. 6 OF 13

12/30/2013 3:04:46 PM c:\pwworking\hmm\external\bar50597\dms91103\FB-ST-2021-F1.dgn
BAR50597

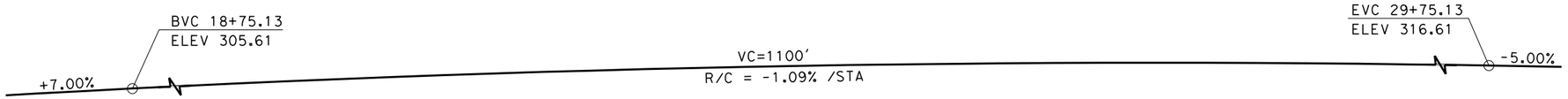

PROFILE GRADE
NO SCALE

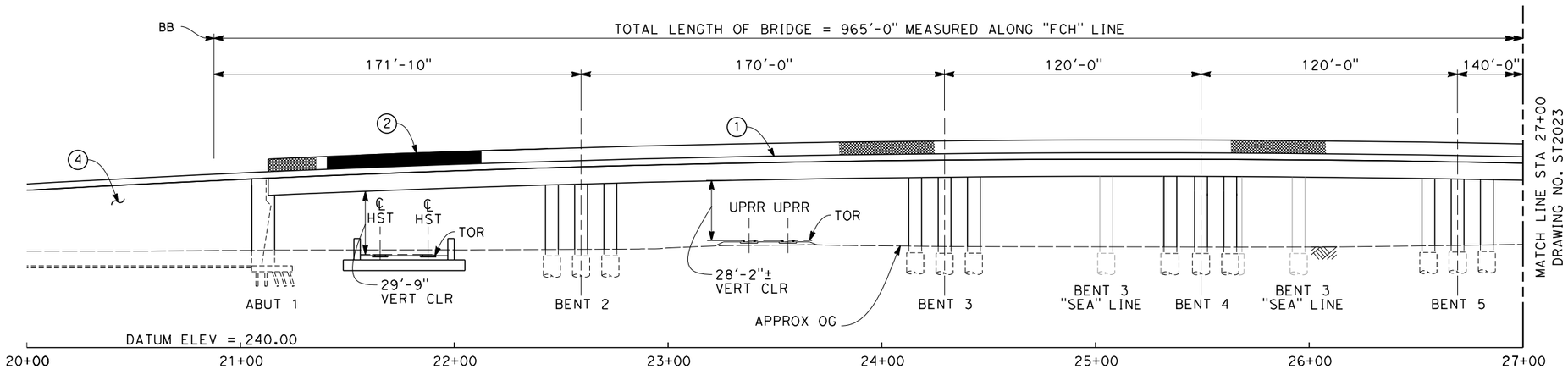

ELEVATION
SCALE: 1"=30'

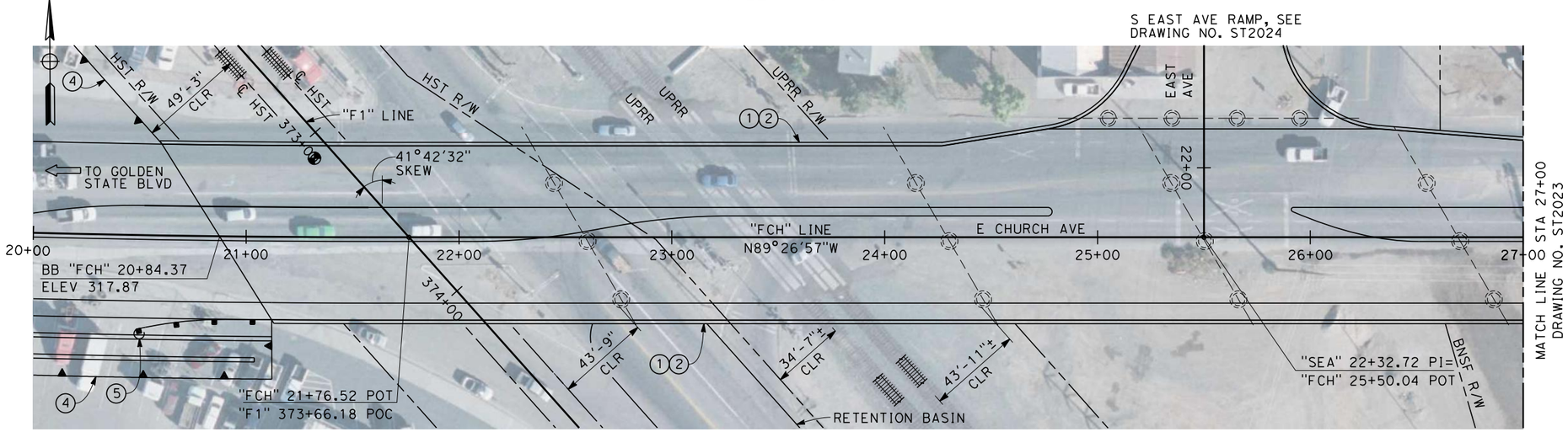

PLAN
SCALE: 1"=30'

NOTES:

1. ALL PILES NOT SHOWN
2. FOR MINIMUM VERTICAL CLEARANCES, HORIZONTAL CURVE DATA, AND DETAILS NOT SHOWN, SEE ROADWAY PLANS.

LEGEND:

1. CONCRETE BARRIER WITH AR FENCE
2. AR FENCE WITH SOLID PLATE OVER HST
3. FUTURE UTILITY ENCASEMENT OPENING
4. RETAINING WALL
5. MBGR

30 0 30 60
1"=30'

REV	DATE	BY	CHK	APP	DESCRIPTION

DESIGNED BY L. SMITH
DRAWN BY D. BARNHART
CHECKED BY B. LUSCOMBE
IN CHARGE R. COFFIN
DATE 12/31/13

RECORD SET 15% DESIGN SUBMISSION - NOT FOR CONSTRUCTION

URS | HMM | ARUP
CALIFORNIA HIGH-SPEED TRAIN

CALIFORNIA HIGH-SPEED RAIL AUTHORITY

CALIFORNIA HIGH-SPEED TRAIN PROJECT
FRESNO TO BAKERSFIELD
FRESNO SUBSECTION
ALIGNMENT F1
OVERHEAD PLANNING STUDY
E CHURCH AVE

CONTRACT NO. HSR 06-0003
DRAWING NO. ST2022
SCALE AS SHOWN
SHEET NO. 7 OF 13

12/30/2013 3:05:43 PM c:\pwworking\hmm\external\bar50597\dms91103\VFB-ST-2022-F1.dgn
BAR50597

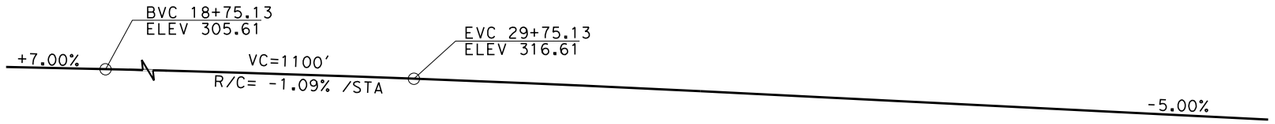

PROFILE GRADE
NO SCALE

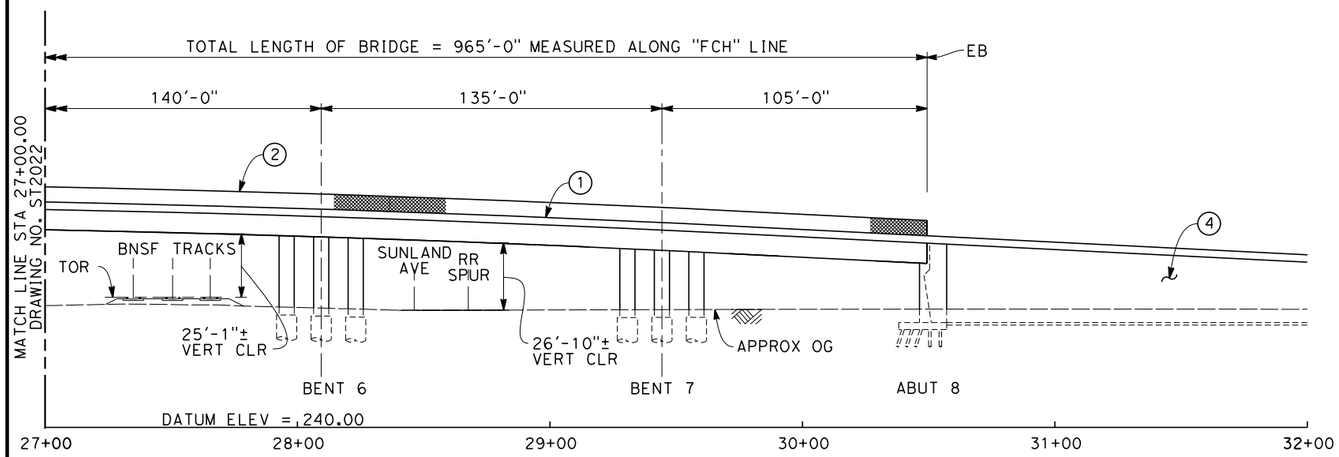

ELEVATION
SCALE: 1"=30'

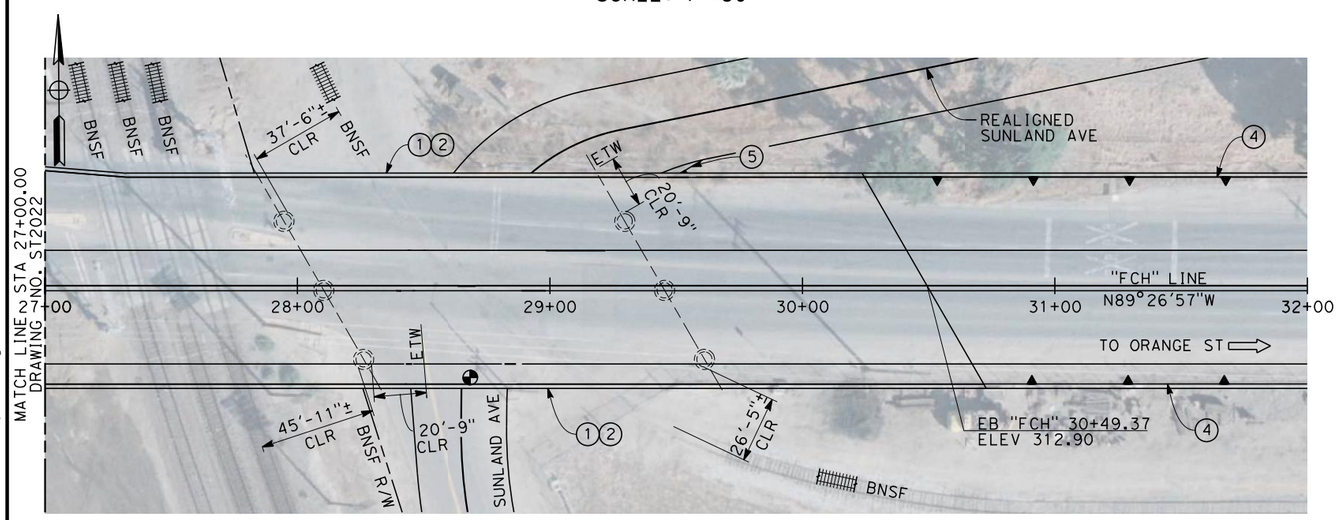

PLAN
SCALE: 1"=30'

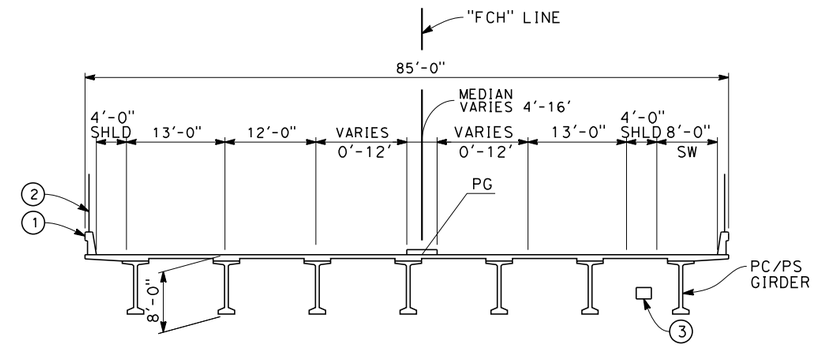

SECTION OVER BNSF AND UPRR

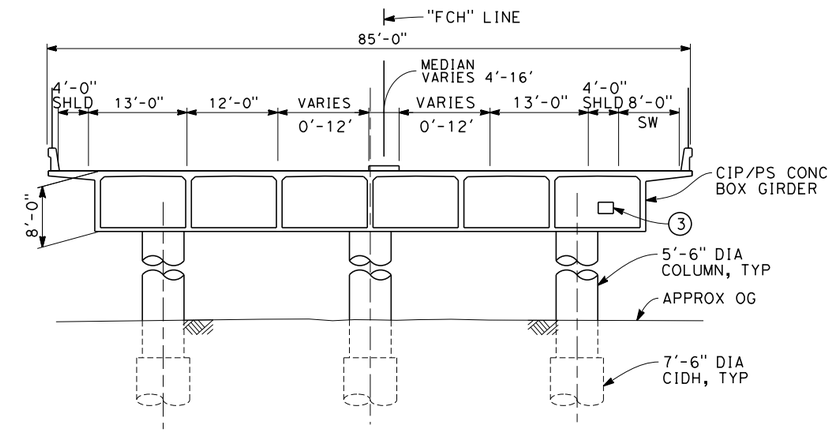

TYPICAL SECTION
SCALE: 1"=10'

NOTES:

1. ALL PILES NOT SHOWN
2. FOR MINIMUM VERTICAL CLEARANCES, HORIZONTAL CURVE DATA, AND DETAILS NOT SHOWN, SEE ROADWAY PLANS.

LEGEND:

1. CONCRETE BARRIER WITH AR FENCE
2. AR FENCE
3. FUTURE UTILITY ENCASEMENT OPENING
4. RETAINING WALL W/ BARRIER
5. MBGR

10 0 10 20 — 1"=10'

30 0 30 60 — 1"=30'

REV	DATE	BY	CHK	APP	DESCRIPTION

DESIGNED BY L. SMITH
DRAWN BY D. BARNHART
CHECKED BY B. LUSCOMBE
IN CHARGE R. COFFIN
DATE 12/31/13

RECORD SET 15% DESIGN SUBMISSION - NOT FOR CONSTRUCTION

URS | HMM | ARUP
CALIFORNIA HIGH-SPEED TRAIN

CALIFORNIA HIGH-SPEED RAIL AUTHORITY

CALIFORNIA HIGH-SPEED TRAIN PROJECT
FRESNO TO BAKERSFIELD
FRESNO SUBSECTION
ALIGNMENT F1
OVERHEAD PLANNING STUDY
E CHURCH AVE

CONTRACT NO. HSR 06-0003
DRAWING NO. ST2023
SCALE AS SHOWN
SHEET NO. 8 OF 13

12/30/2013 3:06:33 PM c:\pwworking\hmm\external\bar50597\dms91103\FB-ST-2023-F1.dgn
BAR50597

PROFILE GRADE
NO SCALE

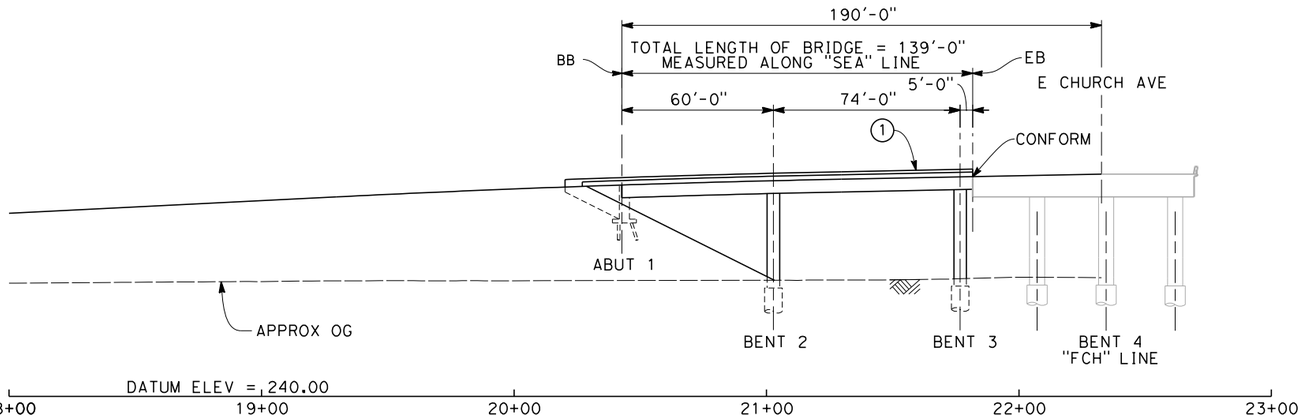

ELEVATION
SCALE: 1"=30'

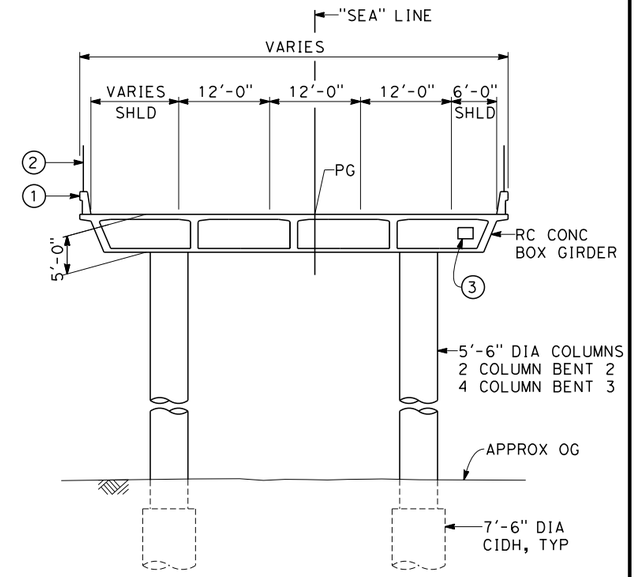

TYPICAL SECTION
SCALE: 1"=10'

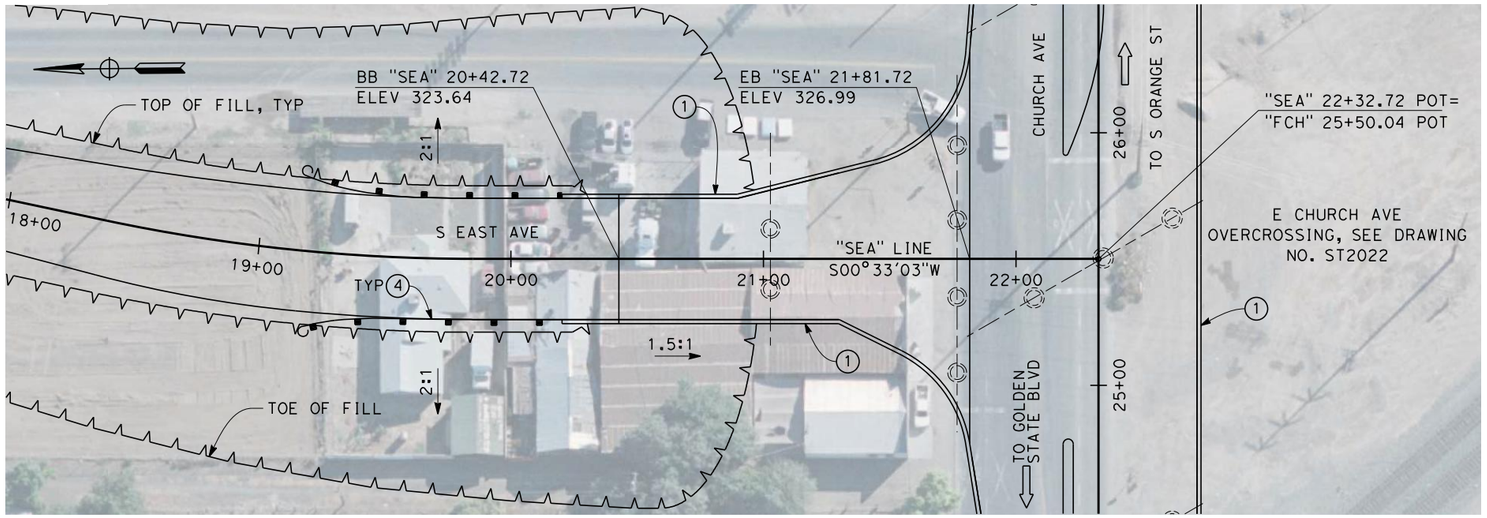

PLAN
SCALE: 1"=30'

NOTES:

1. ALL PILES NOT SHOWN
2. FOR MINIMUM VERTICAL CLEARANCES, HORIZONTAL CURVE DATA, AND DETAILS NOT SHOWN, SEE ROADWAY PLANS.

LEGEND:

1. CONCRETE BARRIER
2. AR FENCE WITH SOLID PLATE OVER HST
3. FUTURE UTILITY ENCASEMENT OPENING
4. MBGR

10 0 10 20 — 1"=10'

30 0 30 60 — 1"=30'

REV	DATE	BY	CHK	APP	DESCRIPTION

DESIGNED BY L. SMITH
DRAWN BY D. BARNHART
CHECKED BY E. MORAN
IN CHARGE R. COFFIN
DATE 12/31/13

RECORD SET 15% DESIGN SUBMISSION - NOT FOR CONSTRUCTION

URS | HMM | ARUP
CALIFORNIA HIGH-SPEED TRAIN

CALIFORNIA HIGH-SPEED RAIL AUTHORITY

CALIFORNIA HIGH-SPEED TRAIN PROJECT
FRESNO TO BAKERSFIELD
FRESNO SUBSECTION
ALIGNMENT F1
OVERHEAD PLANNING STUDY
S EAST AVE

CONTRACT NO. HSR 06-0003
DRAWING NO. ST2024
SCALE AS SHOWN
SHEET NO. 9 OF 13

12/30/2013 3:07:20 PM c:\pwworking\hmm\external\bar50597\dms91103\VFB-ST-2024-F1.dgn
BAR50597

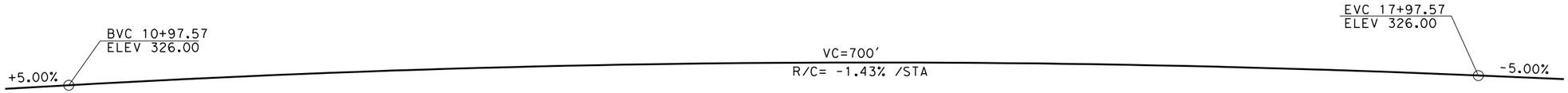

PROFILE GRADE
NO SCALE

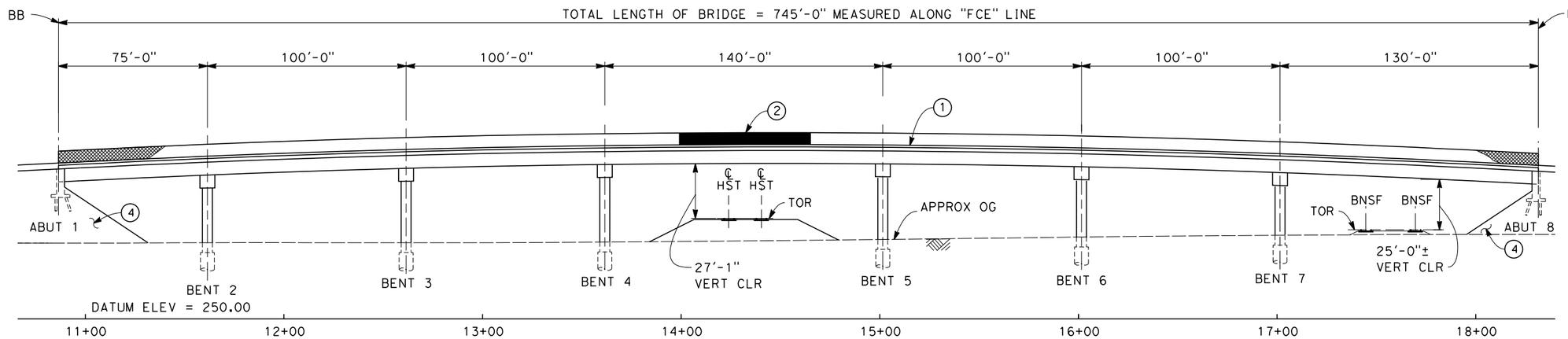

ELEVATION
SCALE: 1"=30'

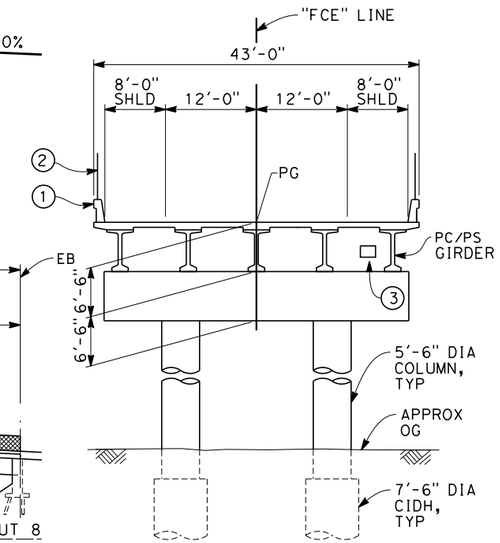

TYPICAL SECTION
SCALE: 1"=10'

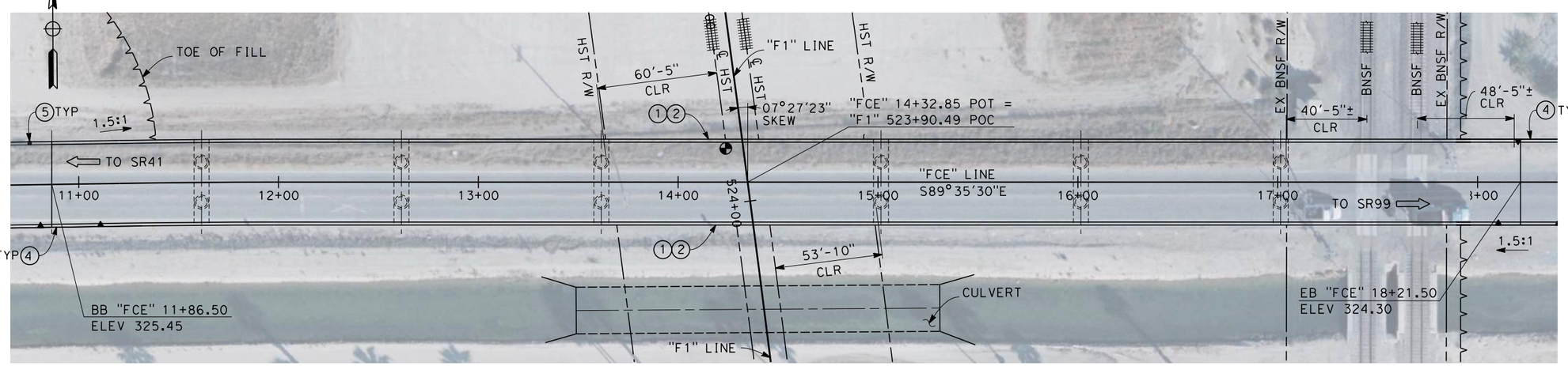

PLAN
SCALE: 1"=30'

NOTES:

1. ALL PILES NOT SHOWN
2. FOR MINIMUM VERTICAL CLEARANCES, HORIZONTAL CURVE DATA, AND DETAILS NOT SHOWN, SEE ROADWAY PLANS.

LEGEND:

1. CONCRETE BARRIER WITH AR FENCE
2. AR FENCE WITH SOLID PLATE OVER HST
3. FUTURE UTILITY ENCASEMENT OPENING
4. RETAINING WALL W/ BARRIER
5. MBGR

10 0 10 20 — 1"=10'

30 0 30 60 — 1"=30'

REV	DATE	BY	CHK	APP	DESCRIPTION

DESIGNED BY L. SMITH
DRAWN BY D. BARNHART
CHECKED BY E. MORAN
IN CHARGE R. COFFIN
DATE 12/31/13

RECORD SET 15% DESIGN SUBMISSION - NOT FOR CONSTRUCTION

URS | HMM | ARUP
CALIFORNIA HIGH-SPEED TRAIN

CALIFORNIA HIGH-SPEED RAIL AUTHORITY

CALIFORNIA HIGH-SPEED TRAIN PROJECT
FRESNO TO BAKERSFIELD
FRESNO SUBSECTION
ALIGNMENT F1
OVERHEAD PLANNING STUDY
E CENTRAL AVE

CONTRACT NO. HSR 06-0003
DRAWING NO. ST2025
SCALE AS SHOWN
SHEET NO. 10 OF 13

12/30/2013 3:08:11 PM c:\pwworking\hmm\external\bar50597\dms91103\VFB-ST-2025-F1.dgn
BAR50597

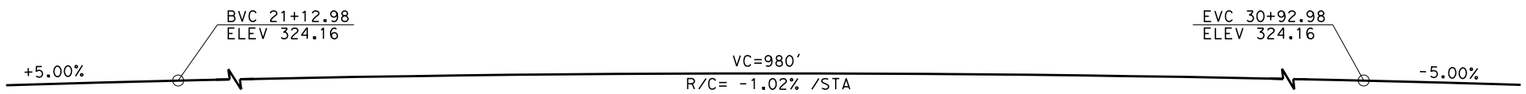

PROFILE GRADE
NO SCALE

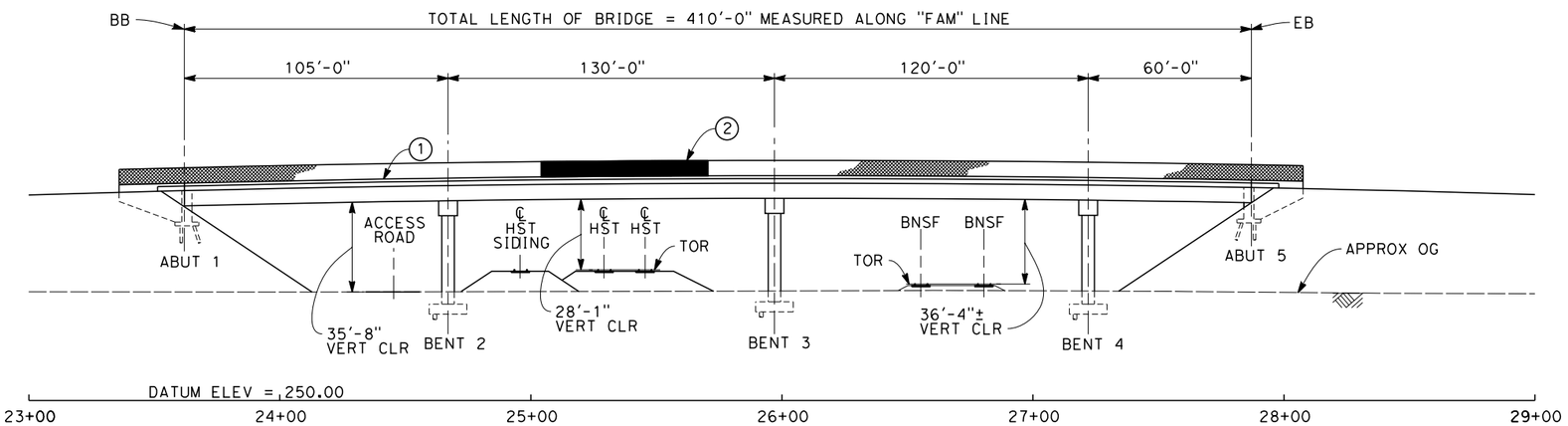

ELEVATION
SCALE: 1"=30'

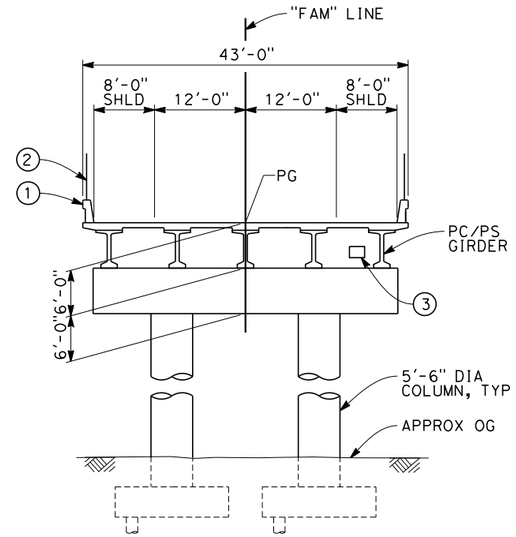

TYPICAL SECTION
SCALE: 1"=10'

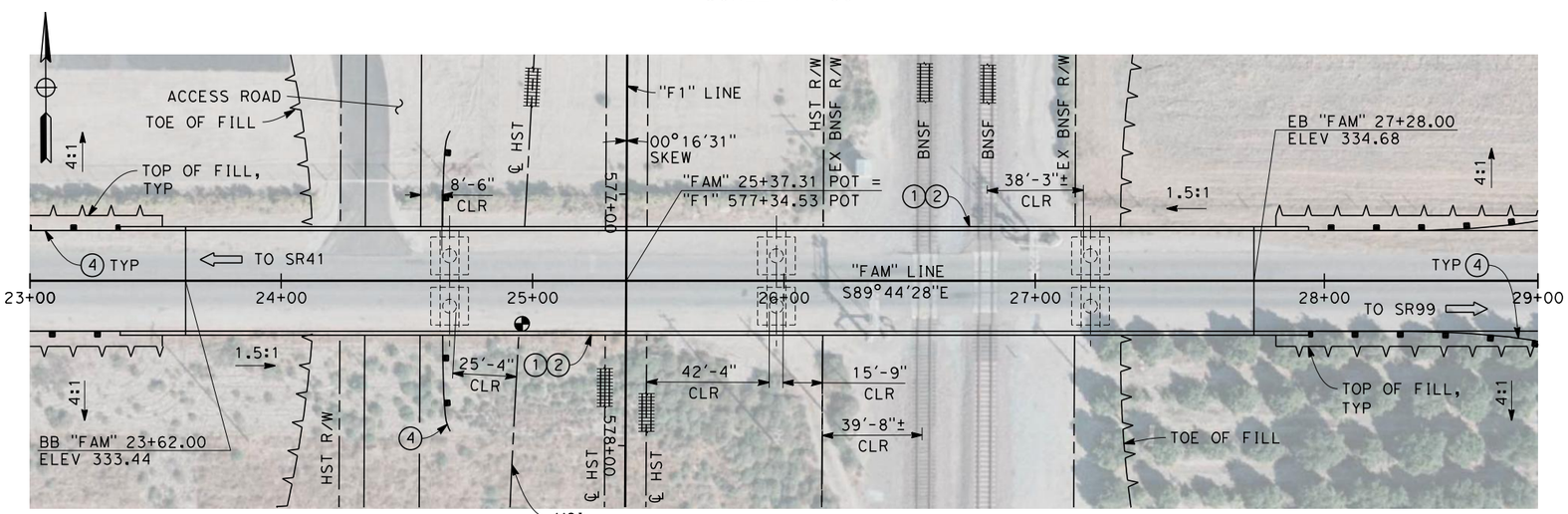

PLAN
SCALE: 1"=30'

NOTES:

1. ALL PILES NOT SHOWN
2. FOR MINIMUM VERTICAL CLEARANCES, HORIZONTAL CURVE DATA, AND DETAILS NOT SHOWN, SEE ROADWAY PLANS.

LEGEND:

1. CONCRETE BARRIER WITH AR FENCE
2. AR FENCE WITH SOLID PLATE OVER HST
3. FUTURE UTILITY ENCASEMENT OPENING
4. MBGR

10 0 10 20 — 1"=10'

30 0 30 60 — 1"=30'

REV	DATE	BY	CHK	APP	DESCRIPTION

DESIGNED BY L. SMITH
DRAWN BY D. BARNHART
CHECKED BY E. MORAN
IN CHARGE R. COFFIN
DATE 12/31/13

RECORD SET 15% DESIGN SUBMISSION - NOT FOR CONSTRUCTION

URS | HMM | ARUP
CALIFORNIA HIGH-SPEED TRAIN

CALIFORNIA HIGH-SPEED RAIL AUTHORITY

CALIFORNIA HIGH-SPEED TRAIN PROJECT
FRESNO TO BAKERSFIELD
FRESNO SUBSECTION
ALIGNMENT F1
OVERHEAD PLANNING STUDY
E AMERICAN AVE

CONTRACT NO. HSR 06-0003
DRAWING NO. ST2028
SCALE AS SHOWN
SHEET NO. 11 OF 13

12/30/2013 3:09:09 PM c:\pwworking\hmm\external\bar50597\dms91103\VFB-ST-2028-F1.dgn
BAR50597

FOR NOTES AND LEGEND,
SEE SHEET ST2052

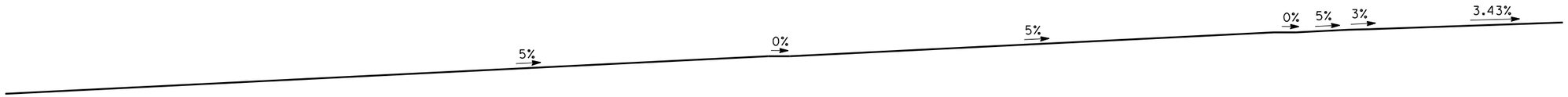

PROFILE GRADE

NO SCALE
SEE DEVELOPED ELEVATION

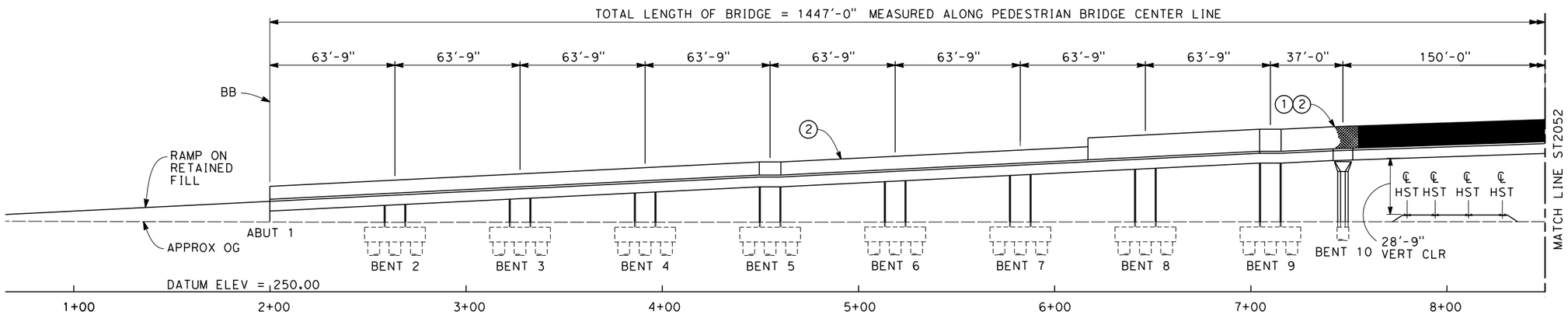

DEVELOPED ELEVATION

SCALE: 1"=30'

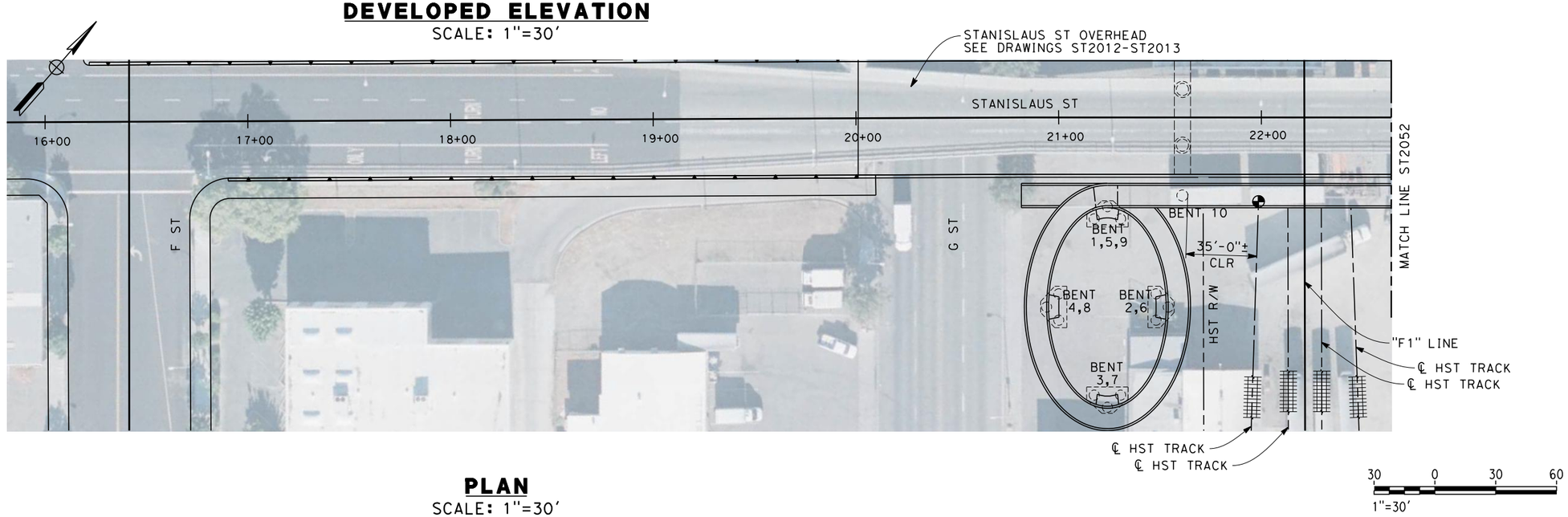

PLAN

SCALE: 1"=30'

REV	DATE	BY	CHK	APP	DESCRIPTION

DESIGNED BY L. SMITH
DRAWN BY D. BARNHART
CHECKED BY E. MORAN
IN CHARGE R. COFFIN
DATE 12/31/13

RECORD SET 15% DESIGN SUBMISSION - NOT FOR CONSTRUCTION

URS | HMM | ARUP
CALIFORNIA HIGH-SPEED TRAIN

CALIFORNIA HIGH-SPEED RAIL AUTHORITY

CALIFORNIA HIGH-SPEED TRAIN PROJECT
FRESNO TO BAKERSFIELD
FRESNO SUBSECTION
ALIGNMENT F1
PEDESTRIAN PLANNING STUDY
STANISLAUS ST

CONTRACT NO. HSR 06-0003
DRAWING NO. ST2051
SCALE AS SHOWN
SHEET NO. 12 OF 13

12/30/2013 3:09:53 PM c:\pwworking\hmm\external\bar50597\dms91103\FB-ST-2051-F1.dgn
BAR50597

PROFILE GRADE

NO SCALE
SEE DEVELOPED ELEVATION

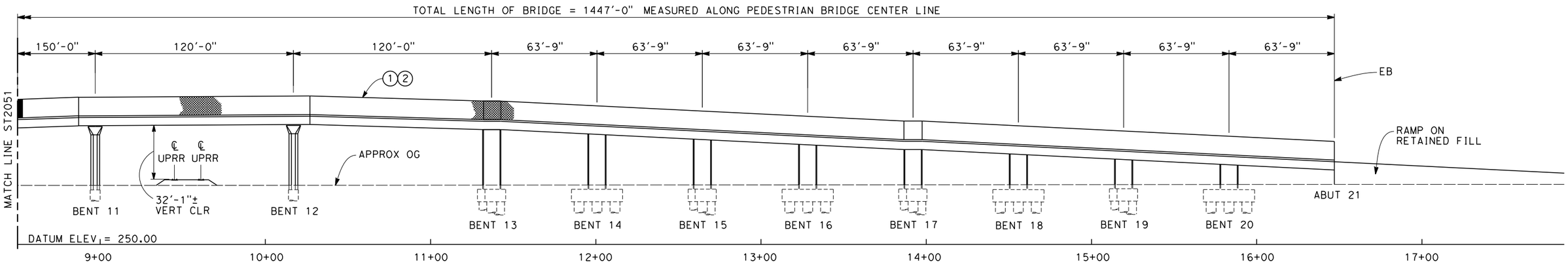

DEVELOPED ELEVATION

SCALE: 1"=30'

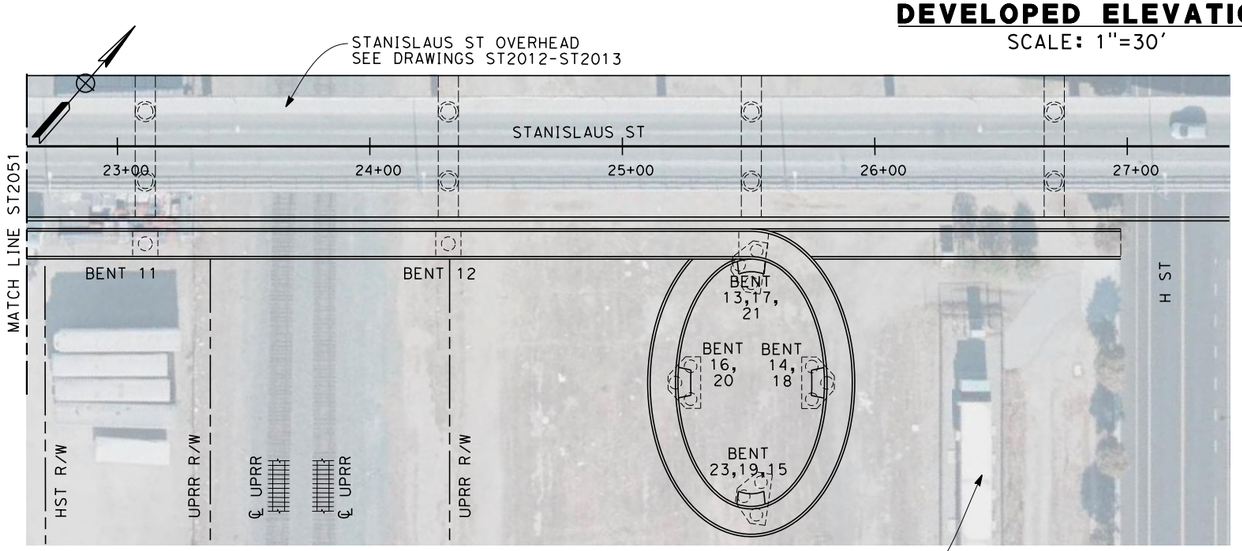

PLAN

SCALE: 1"=30'

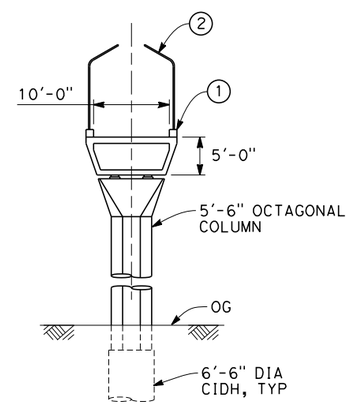

SECTION

SCALE: 1"=10'

NOTES:

1. STANISLAUS ST OVERHEAD NOT SHOWN IN ELEVATION
2. ALL PILES NOT SHOWN

LEGEND:

1. PEDESTRIAN CURB
2. AR FENCE

10 0 10 20
1"=10'

30 0 30 60
1"=30'

REV	DATE	BY	CHK	APP	DESCRIPTION

DESIGNED BY L. SMITH
DRAWN BY D. BARNHART
CHECKED BY E. MORAN
IN CHARGE R. COFFIN
DATE 12/31/13

RECORD SET 15% DESIGN SUBMISSION - NOT FOR CONSTRUCTION

URS | HMM | ARUP
CALIFORNIA HIGH-SPEED TRAIN

CALIFORNIA HIGH-SPEED RAIL AUTHORITY

CALIFORNIA HIGH-SPEED TRAIN PROJECT
FRESNO TO BAKERSFIELD
FRESNO SUBSECTION
ALIGNMENT F1
PEDESTRIAN PLANNING STUDY
STANISLAUS ST

CONTRACT NO. HSR 06-0003
DRAWING NO. ST2052
SCALE AS SHOWN
SHEET NO. 13 OF 13

12/30/2013 3:10:34 PM c:\pwworking\hmm\external\bar50597\dms91103\FB-ST-2052-F1.dgn
BAR50597

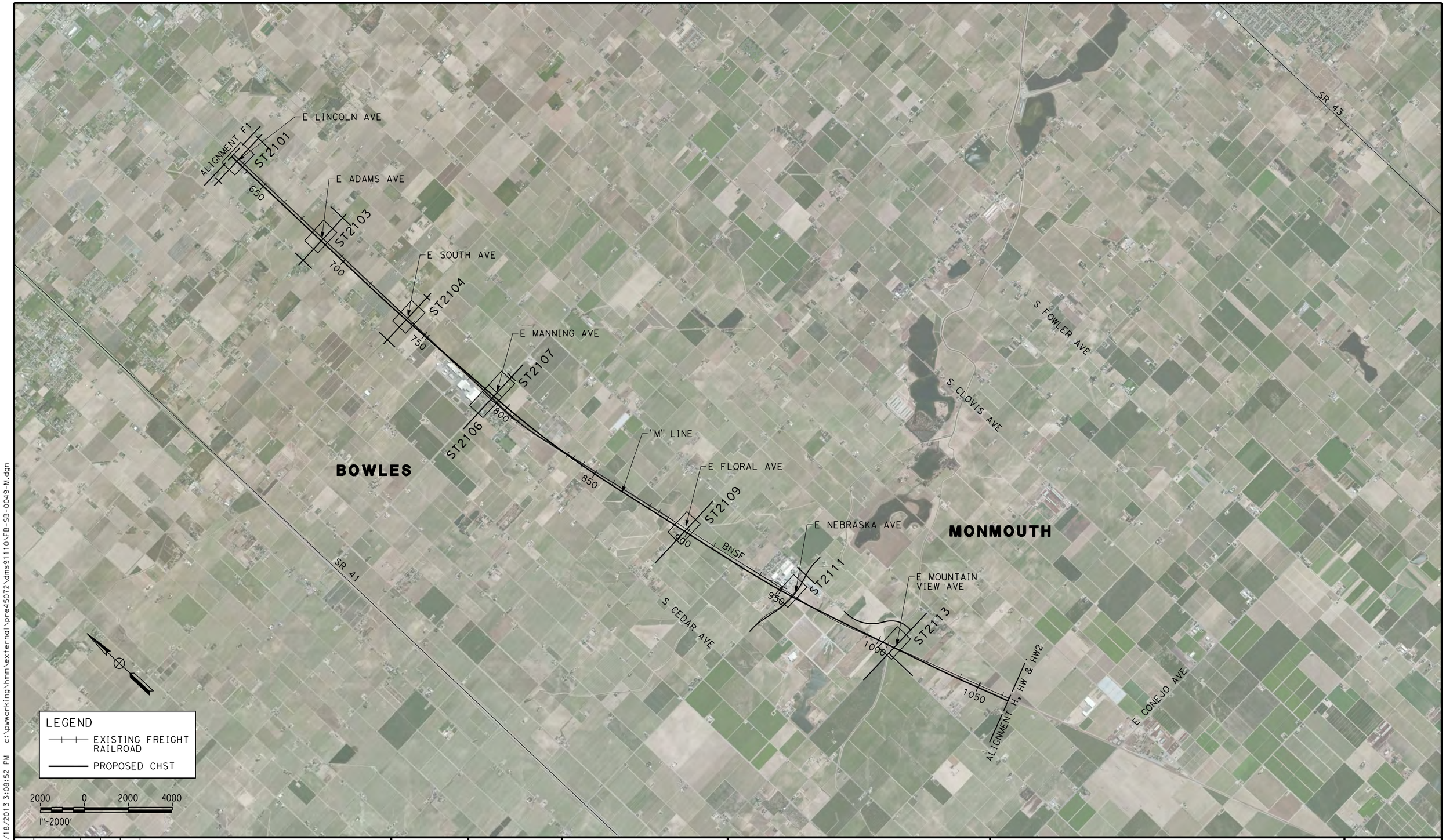

REV	DATE	BY	CHK	APP	DESCRIPTION

DESIGNED BY L. SMITH
DRAWN BY D. BARNHART
CHECKED BY E. MORAN
IN CHARGE R. COFFIN
DATE 12/31/13

RECORD SET 15% DESIGN SUBMISSION - NOT FOR CONSTRUCTION

URS | HMM | ARUP
CALIFORNIA HIGH-SPEED TRAIN

CALIFORNIA HIGH-SPEED RAIL AUTHORITY

CALIFORNIA HIGH-SPEED TRAIN PROJECT
FRESNO TO BAKERSFIELD
MONMOUTH SUBSECTION
ALIGNMENT M
OVERHEAD PLANNING STUDY
KEY MAP

CONTRACT NO. HSR 06-0003
DRAWING NO. SB0049
SCALE AS SHOWN
SHEET NO. 1 OF 9

12/18/2013 3:08:52 PM c:\pwworking\hmm\external\pre45072\dms91110\FB-SB-0049-M.dgn
PRE45072

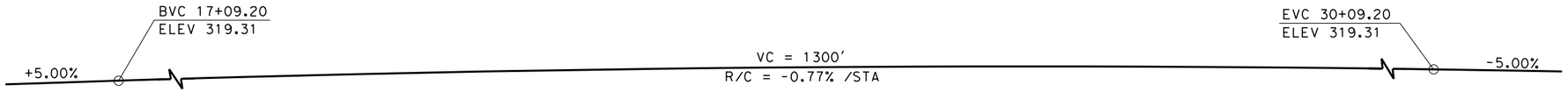

PROFILE GRADE
NO SCALE

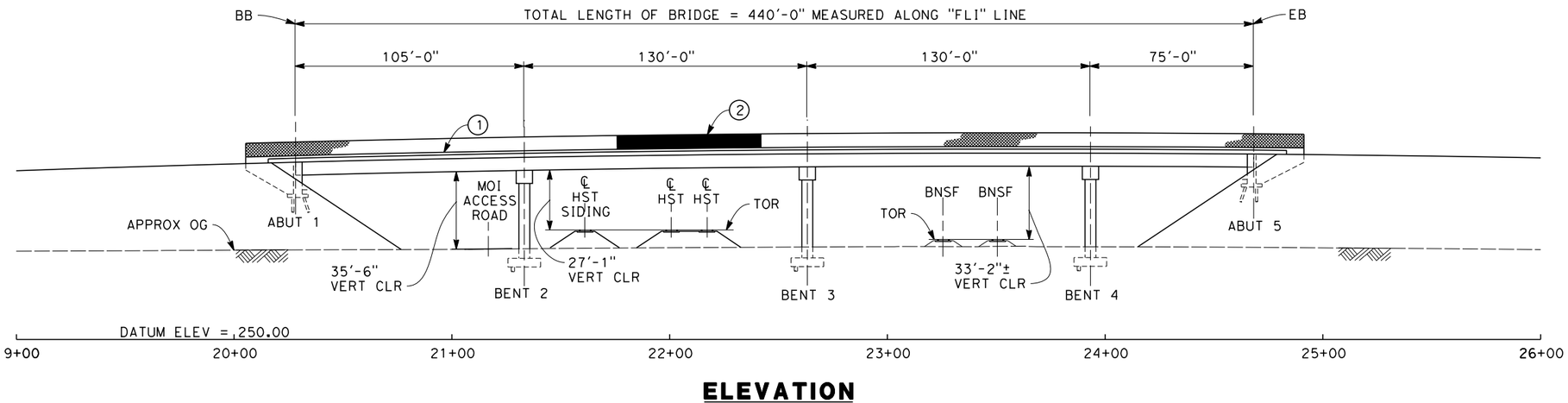

ELEVATION
SCALE: 1"=30'

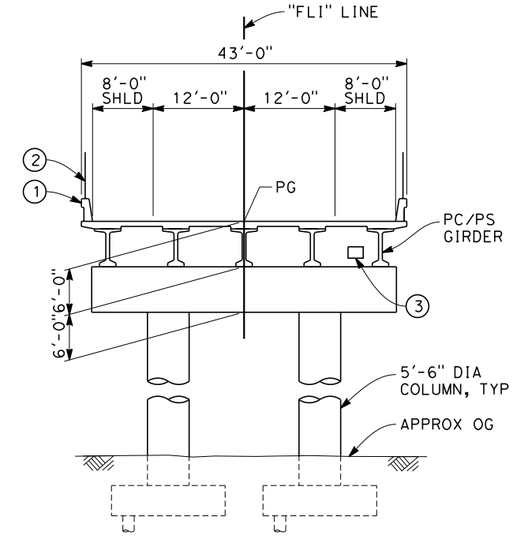

TYPICAL SECTION
SCALE: 1"=10'

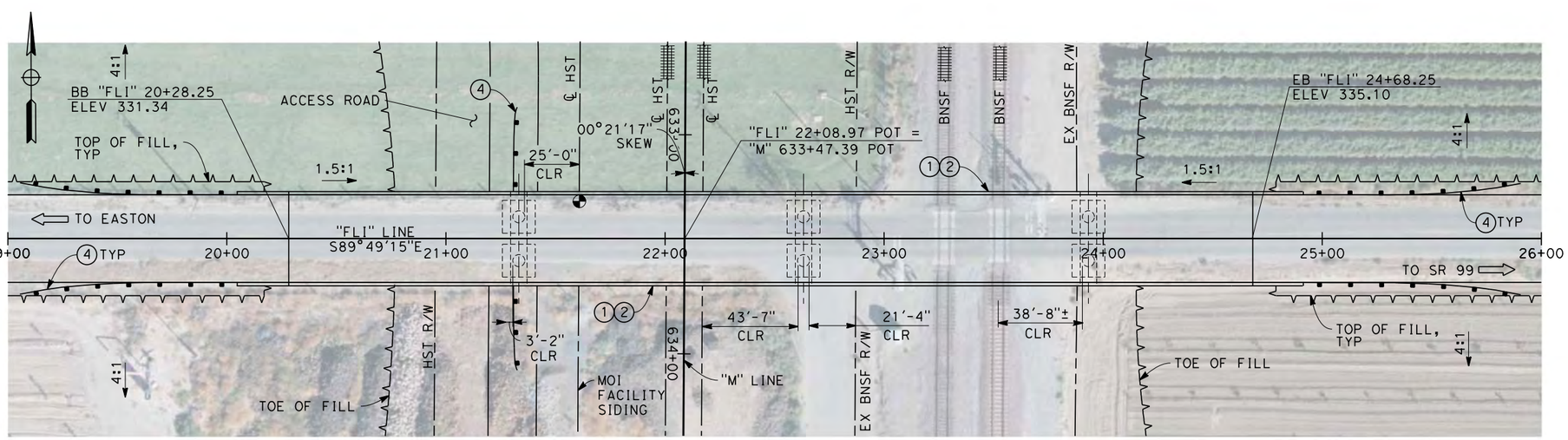

PLAN
SCALE: 1"=30'

NOTES:
1. ALL PILES NOT SHOWN
2. FOR MINIMUM VERTICAL CLEARANCES, HORIZONTAL CURVE DATA, AND DETAILS NOT SHOWN, SEE ROADWAY PLANS.

LEGEND:
1. CONCRETE BARRIER WITH AR FENCE
2. AR FENCE WITH SOLID PLATE OVER HST
3. FUTURE UTILITY ENCASEMENT OPENING
4. MBGR

10 0 10 20 — 1"=10'
30 0 30 60 — 1"=30'

REV	DATE	BY	CHK	APP	DESCRIPTION

DESIGNED BY L. SMITH
DRAWN BY T. PRETZER
CHECKED BY E. MORAN
IN CHARGE R. COFFIN
DATE 12/31/13

RECORD SET 15% DESIGN SUBMISSION - NOT FOR CONSTRUCTION

URS | HMM | ARUP
CALIFORNIA HIGH-SPEED TRAIN

CALIFORNIA HIGH-SPEED RAIL AUTHORITY

CALIFORNIA HIGH-SPEED TRAIN PROJECT
FRESNO TO BAKERSFIELD
MONMOUTH SUBSECTION
ALIGNMENT M
OVERHEAD PLANNING STUDY
E LINCOLN AVE

CONTRACT NO. HSR 06-0003
DRAWING NO. ST2101
SCALE AS SHOWN
SHEET NO. 2 OF 9

PRE45072 12/24/2013 7:41:15 AM c:\pwworking\hmm\external\pre45072\dms91110\FB-ST-2101-M.dgn

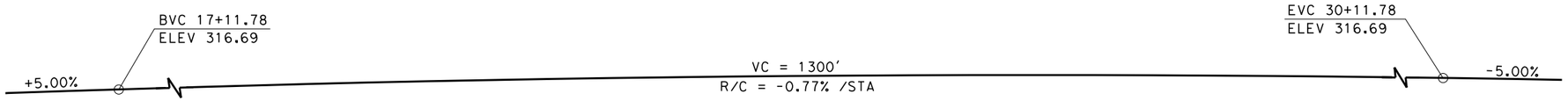

PROFILE GRADE
NO SCALE

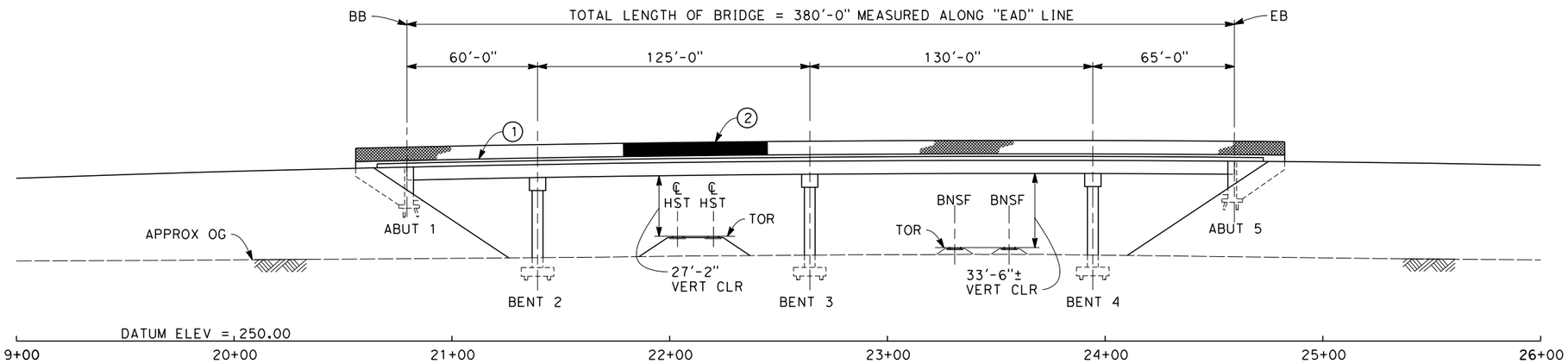

ELEVATION
SCALE: 1"=30'

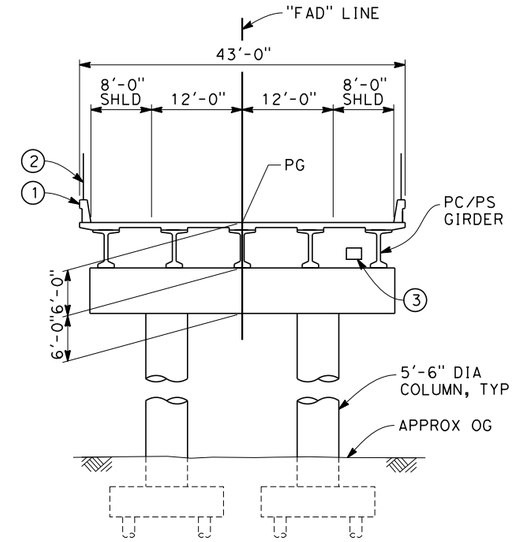

TYPICAL SECTION
SCALE: 1"=10'

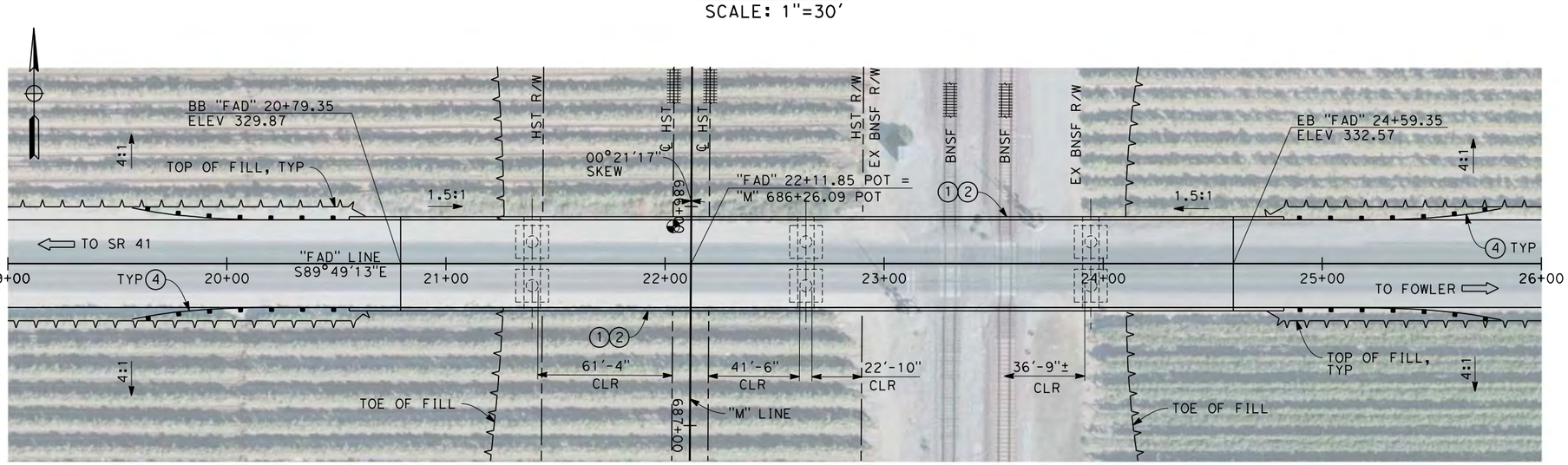

PLAN
SCALE: 1"=30'

NOTES:

1. ALL PILES NOT SHOWN
2. FOR MINIMUM VERTICAL CLEARANCES, HORIZONTAL CURVE DATA, AND DETAILS NOT SHOWN, SEE ROADWAY PLANS.

LEGEND:

1. CONCRETE BARRIER WITH AR FENCE
2. AR FENCE WITH SOLID PLATE OVER HST
3. FUTURE UTILITY ENCASEMENT OPENING
4. MBGR

10 0 10 20 — 1"=10'

30 0 30 60 — 1"=30'

REV	DATE	BY	CHK	APP	DESCRIPTION

DESIGNED BY L. SMITH
DRAWN BY T. PRETZER
CHECKED BY E. MORAN
IN CHARGE R. COFFIN
DATE 12/31/13

RECORD SET 15% DESIGN SUBMISSION - NOT FOR CONSTRUCTION

URS | HMM | ARUP
CALIFORNIA HIGH-SPEED TRAIN

CALIFORNIA HIGH-SPEED RAIL AUTHORITY

CALIFORNIA HIGH-SPEED TRAIN PROJECT
FRESNO TO BAKERSFIELD
MONMOUTH SUBSECTION
ALIGNMENT M
OVERHEAD PLANNING STUDY
E ADAMS AVE

CONTRACT NO. HSR 06-0003
DRAWING NO. ST2103
SCALE AS SHOWN
SHEET NO. 3 OF 9

PRE45072 12/24/2013 7:52:06 AM c:\pwworking\hmm\external\pre45072\dms91110\FB-ST-2103-M.dgn

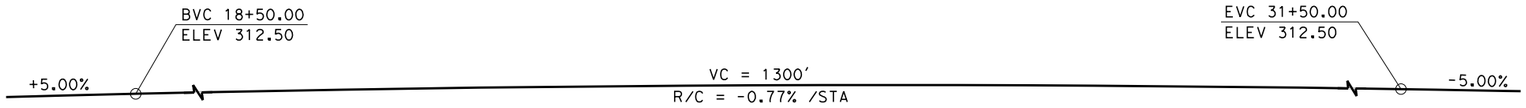

PROFILE GRADE
NO SCALE

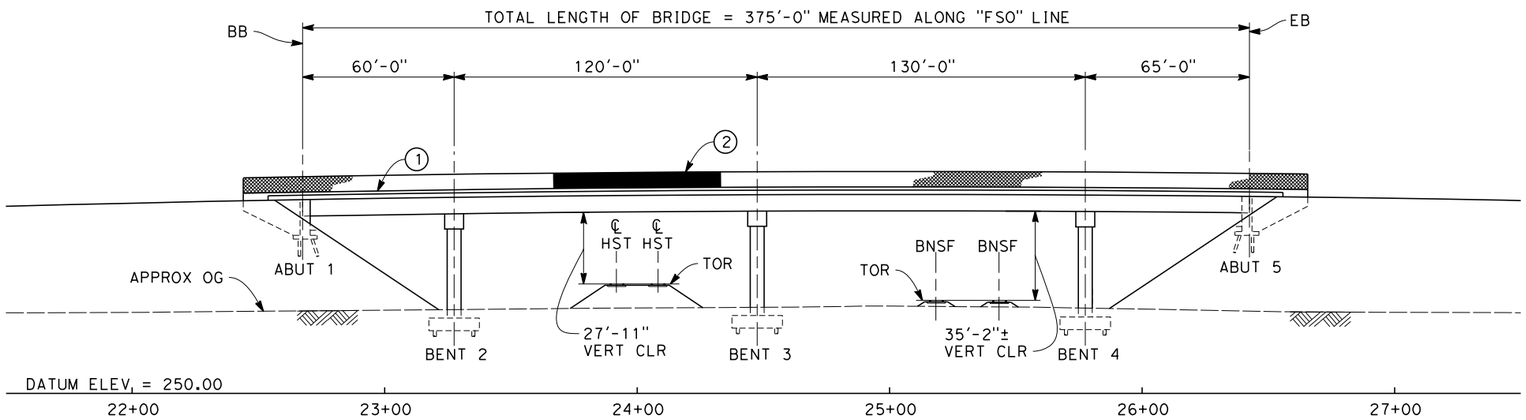

ELEVATION
SCALE: 1"=30'

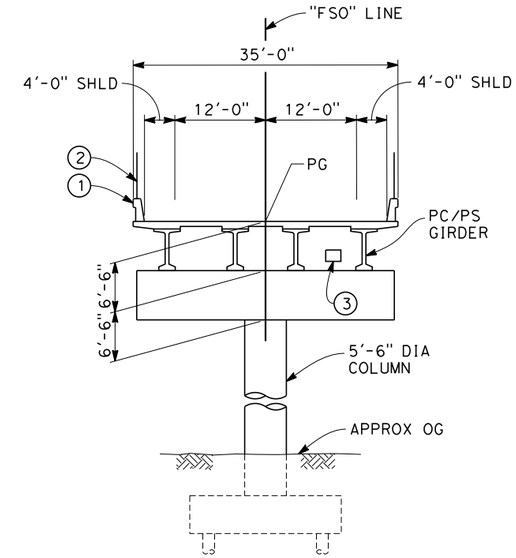

TYPICAL SECTION
SCALE: 1"=10'

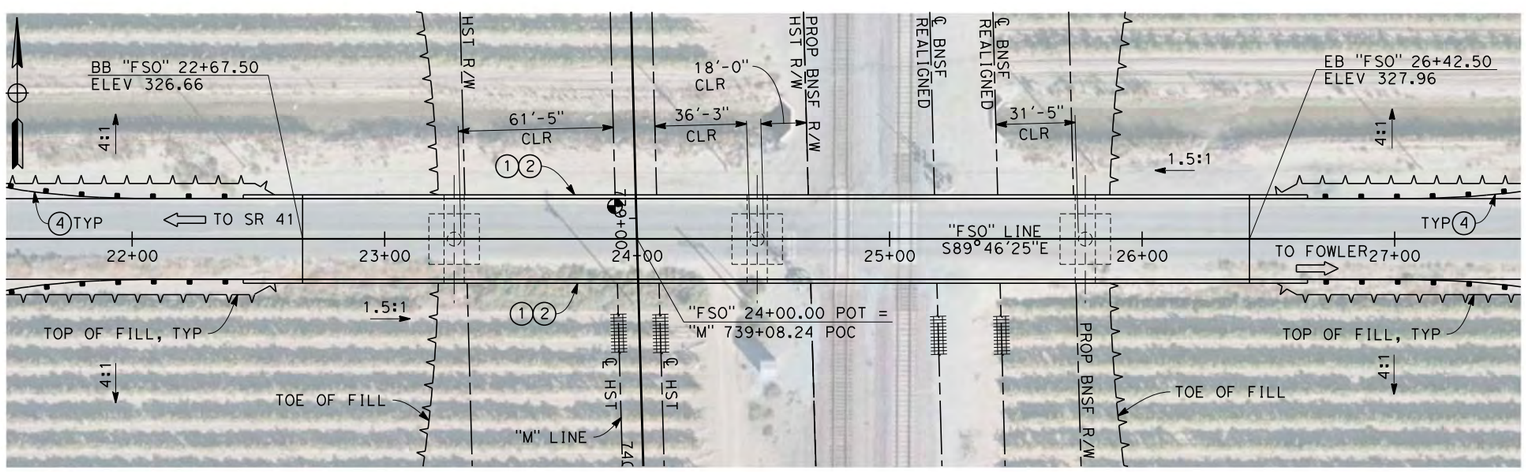

PLAN
SCALE: 1"=30'

NOTES:

1. ALL PILES NOT SHOWN
2. FOR MINIMUM VERTICAL CLEARANCES, HORIZONTAL CURVE DATA, AND DETAILS NOT SHOWN, SEE ROADWAY PLANS.

LEGEND:

1. CONCRETE BARRIER WITH AR FENCE
2. AR FENCE WITH SOLID PLATE OVER HST
3. FUTURE UTILITY ENCASEMENT OPENING
4. MBGR

10 0 10 20 — 1"=10'

30 0 30 60 — 1"=30'

REV	DATE	BY	CHK	APP	DESCRIPTION

DESIGNED BY L. SMITH
DRAWN BY T. PRETZER
CHECKED BY B. LUSCOMBE
IN CHARGE R. COFFIN
DATE 12/31/13

RECORD SET 15% DESIGN SUBMISSION - NOT FOR CONSTRUCTION

URS | HMM | ARUP
CALIFORNIA HIGH-SPEED TRAIN

CALIFORNIA HIGH-SPEED RAIL AUTHORITY

CALIFORNIA HIGH-SPEED TRAIN PROJECT
FRESNO TO BAKERSFIELD
MONMOUTH SUBSECTION
ALIGNMENT M
OVERHEAD PLANNING STUDY
E SOUTH AVE

CONTRACT NO. HSR 06-0003
DRAWING NO. ST2104
SCALE AS SHOWN
SHEET NO. 4 OF 9

12/24/2013 10:15:15 AM c:\pwworking\hmm\external\pre45072\dms91110\FB-ST-2104-M.dgn
PRE45072

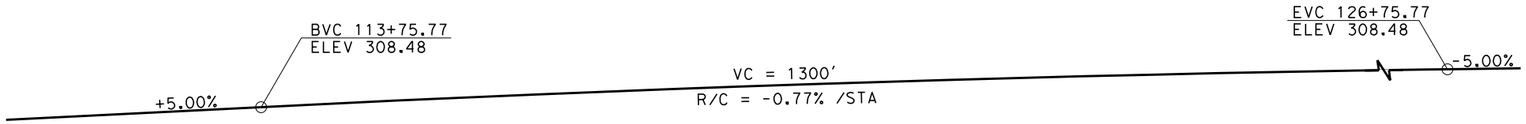

PROFILE GRADE
NO SCALE

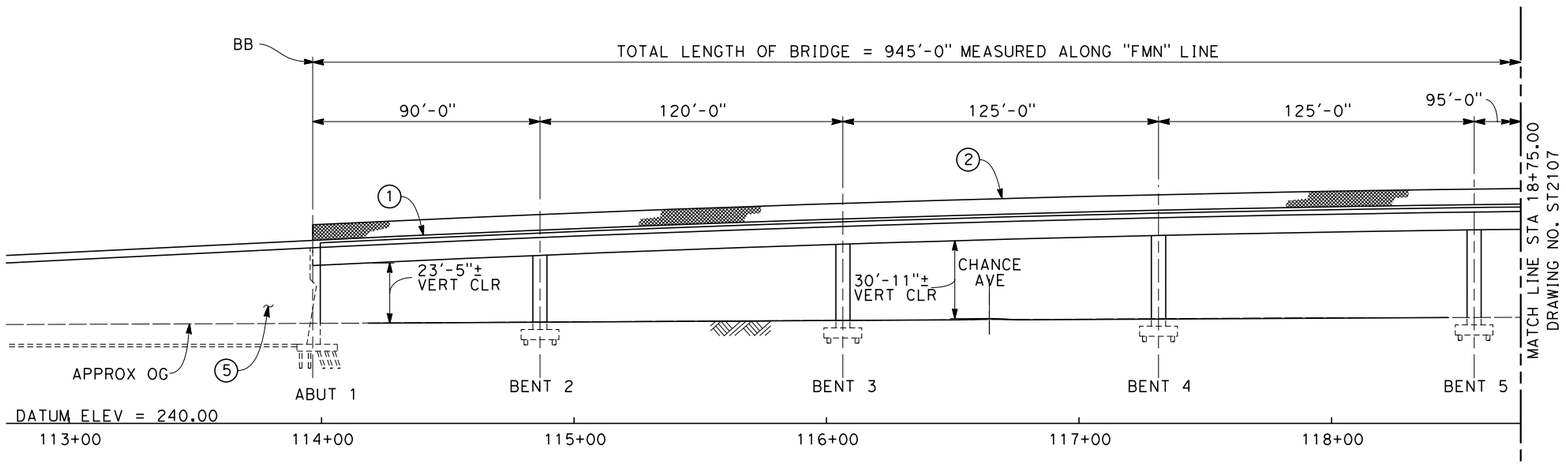

ELEVATION
SCALE: 1"=30'

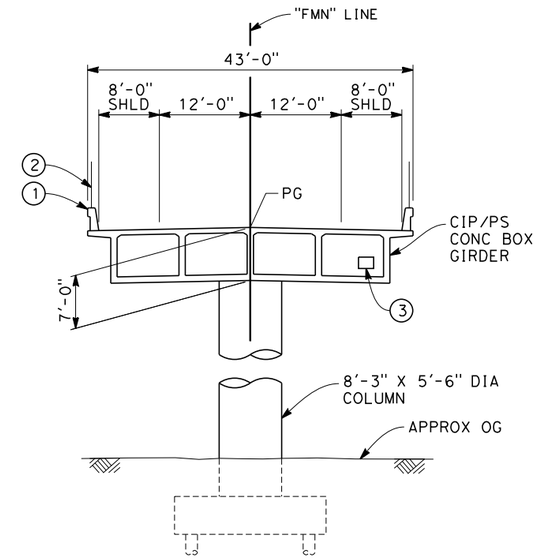

(BENT 2 - 4)

TYPICAL SECTION
SCALE: 1"=10'

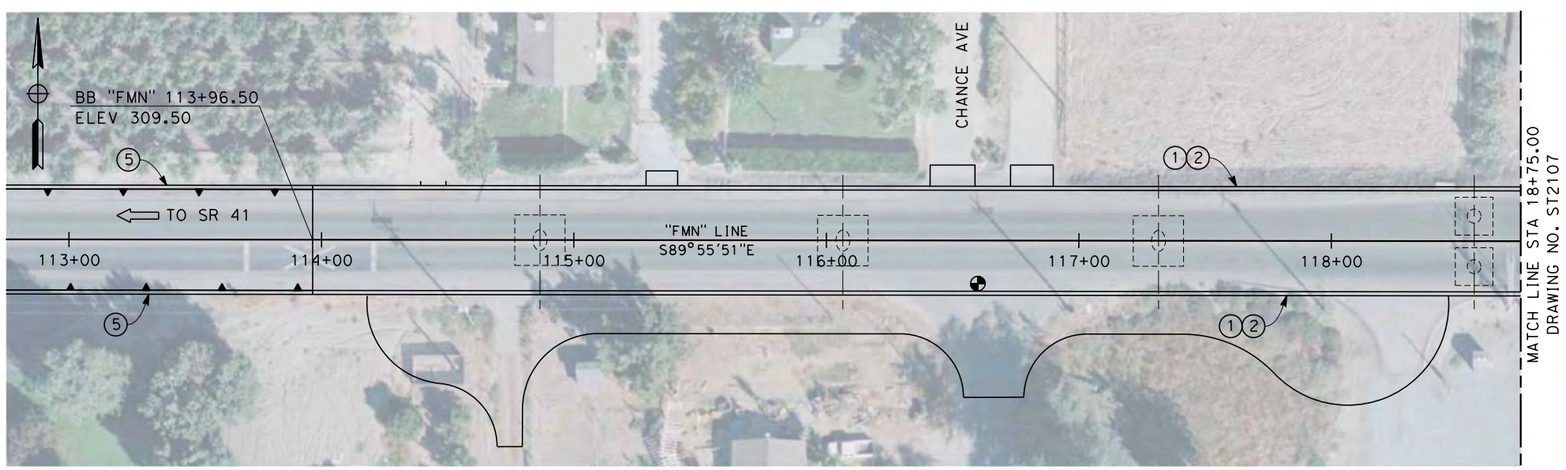

PLAN
SCALE: 1"=30'

NOTES:
1. ALL PILES NOT SHOWN
2. FOR MINIMUM VERTICAL CLEARANCES, HORIZONTAL CURVE DATA, AND DETAILS NOT SHOWN, SEE ROADWAY PLANS.

LEGEND:

1. CONCRETE BARRIER WITH AR FENCE
2. AR FENCE WITH SOLID PLATE OVER HST
3. FUTURE UTILITY ENCASEMENT OPENING
4. MBGR
5. RETAINING WALL WITH BARRIER

10 0 10 20 — 1"=10'
30 0 30 60 — 1"=30'

REV	DATE	BY	CHK	APP	DESCRIPTION

DESIGNED BY L. SMITH
DRAWN BY T. PRETZER
CHECKED BY E. MORAN
IN CHARGE R. COFFIN
DATE 12/31/13

RECORD SET 15% DESIGN SUBMISSION - NOT FOR CONSTRUCTION

URS | HMM | ARUP
CALIFORNIA HIGH-SPEED TRAIN

CALIFORNIA HIGH-SPEED RAIL AUTHORITY

CALIFORNIA HIGH-SPEED TRAIN PROJECT
FRESNO TO BAKERSFIELD
MONMOUTH SUBSECTION
ALIGNMENT M
OVERHEAD PLANNING STUDY
E MANNING AVE

CONTRACT NO. HSR 06-0003
DRAWING NO. ST2106
SCALE AS SHOWN
SHEET NO. 5 OF 9

PRE45072 12/24/2013 9:29:20 AM c:\pwworking\hmm\external\pre45072\dms91110\FB-ST-2106-M.dgn

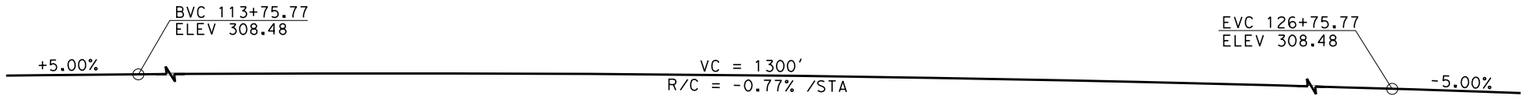

PROFILE GRADE
NO SCALE

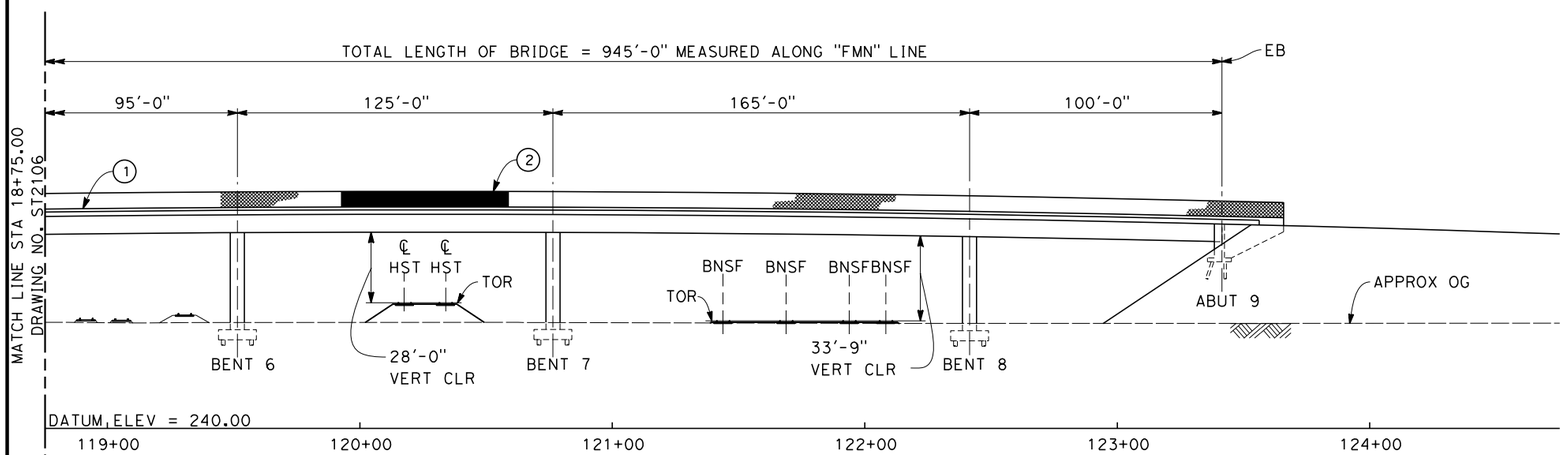

ELEVATION
SCALE: 1"=30'

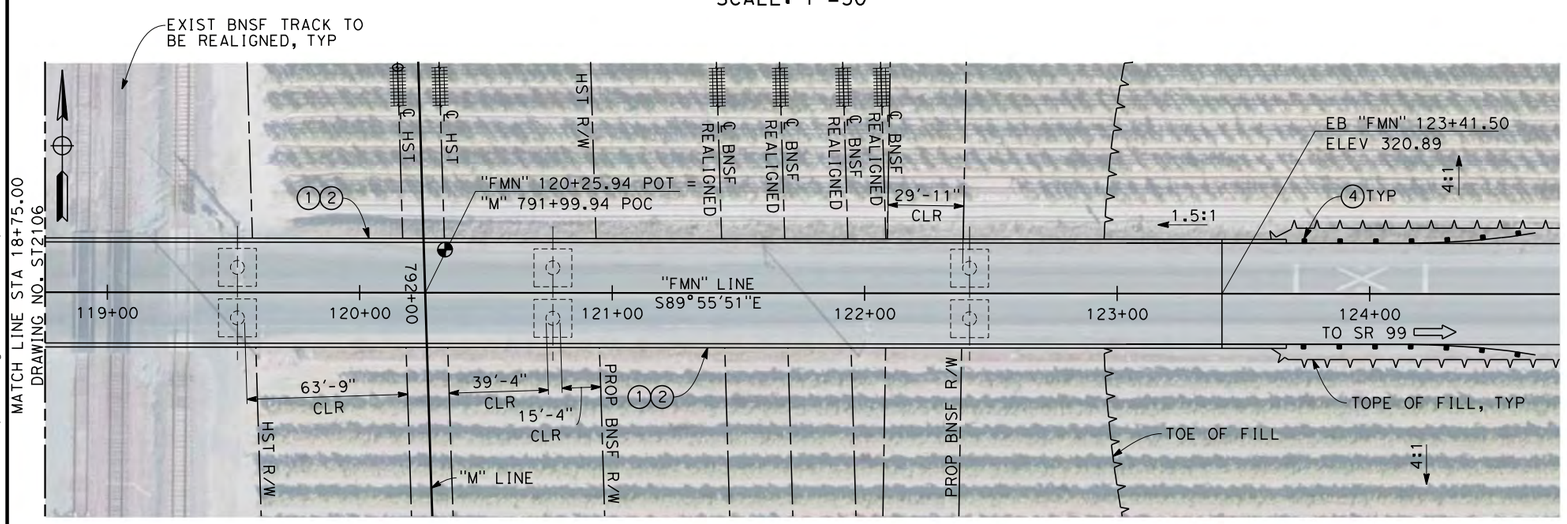

PLAN
SCALE: 1"=30'

NOTE:
FOR NOTES AND LEGEND
SEE SHEET ST2106

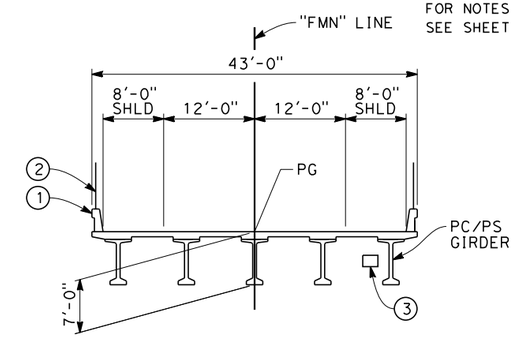

SECTION OVER BNSF

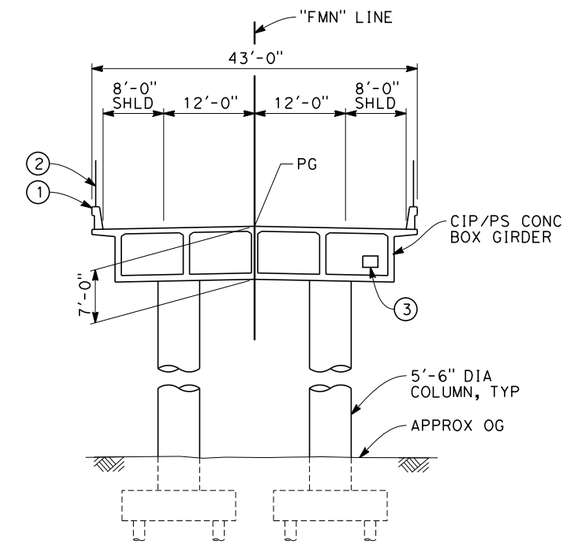

(BENT 5 - 8)

TYPICAL SECTION
SCALE: 1"=10'

10 0 10 20 — 1"=10'
30 0 30 60 — 1"=30'

REV	DATE	BY	CHK	APP	DESCRIPTION

DESIGNED BY L. SMITH
DRAWN BY T. PRETZER
CHECKED BY E. MORAN
IN CHARGE R. COFFIN
DATE 12/31/13

RECORD SET 15% DESIGN SUBMISSION - NOT FOR CONSTRUCTION

URS | HMM | ARUP
CALIFORNIA HIGH-SPEED TRAIN

CALIFORNIA HIGH-SPEED RAIL AUTHORITY

CALIFORNIA HIGH-SPEED TRAIN PROJECT
FRESNO TO BAKERSFIELD
MONMOUTH SUBSECTION
ALIGNMENT M
OVERHEAD PLANNING STUDY
E MANNING AVE

CONTRACT NO. HSR 06-0003
DRAWING NO. ST2107
SCALE AS SHOWN
SHEET NO. 6 OF 9

12/24/2013 10:10:31 AM c:\pwworking\hmm\external\pre45072\dms91110\FB-ST-2107-M.dgn
PRE45072

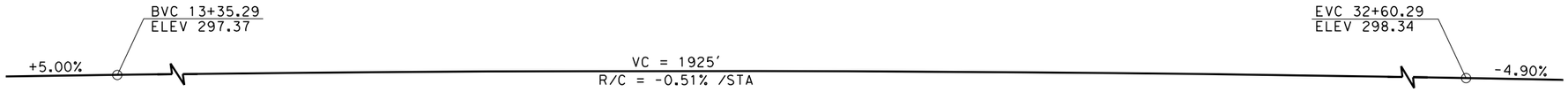

PROFILE GRADE
NO SCALE

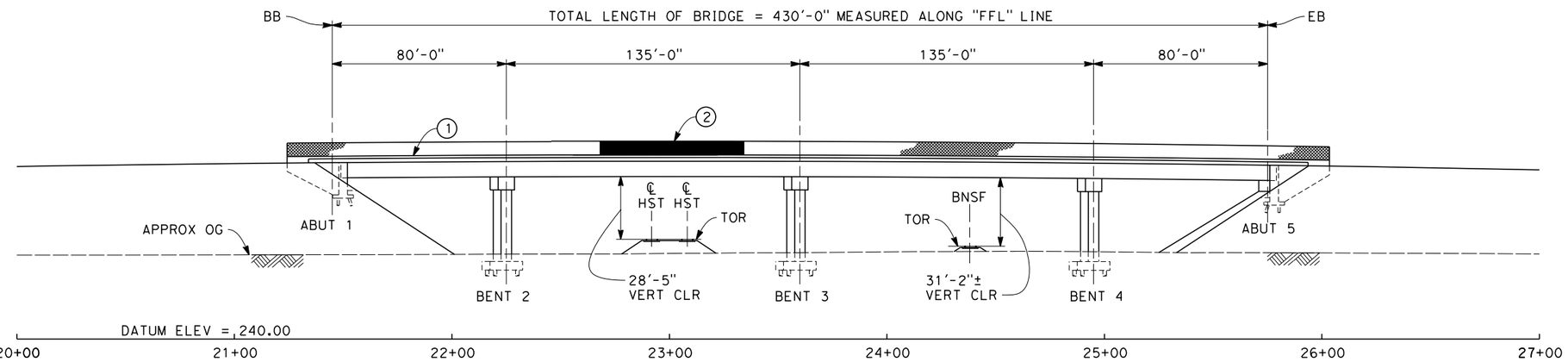

ELEVATION
SCALE: 1"=30'

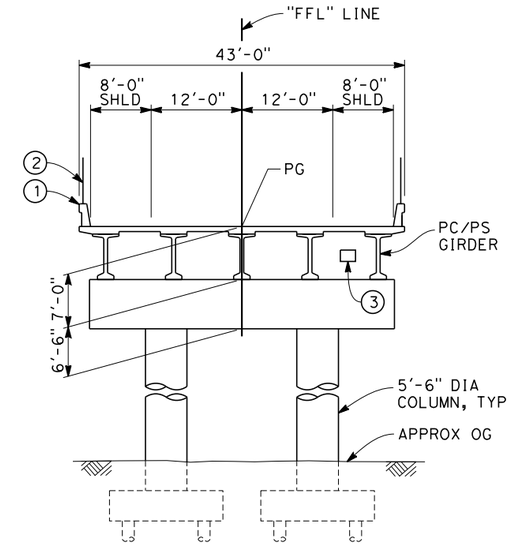

TYPICAL SECTION
SCALE: 1"=10'

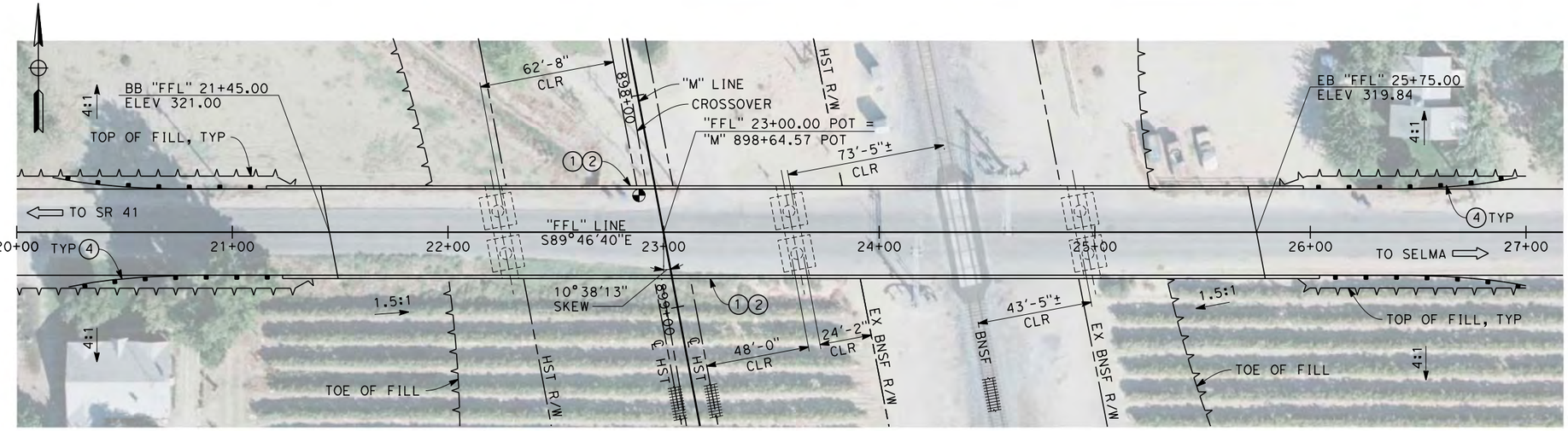

PLAN
SCALE: 1"=30'

NOTES:
1. ALL PILES NOT SHOWN
2. FOR MINIMUM VERTICAL CLEARANCES, HORIZONTAL CURVE DATA, AND DETAILS NOT SHOWN, SEE ROADWAY PLANS.

LEGEND:

1. CONCRETE BARRIER WITH AR FENCE
2. AR FENCE WITH SOLID PLATE OVER HST
3. FUTURE UTILITY ENCASEMENT OPENING
4. MBGR

10 0 10 20 — 1"=10'

30 0 30 60 — 1"=30'

REV	DATE	BY	CHK	APP	DESCRIPTION

DESIGNED BY L. SMITH
DRAWN BY T. PRETZER
CHECKED BY E. MORAN
IN CHARGE R. COFFIN
DATE 12/31/13

RECORD SET 15% DESIGN SUBMISSION - NOT FOR CONSTRUCTION

URS | HMM | ARUP
CALIFORNIA HIGH-SPEED TRAIN

CALIFORNIA HIGH-SPEED RAIL AUTHORITY

CALIFORNIA HIGH-SPEED TRAIN PROJECT
FRESNO TO BAKERSFIELD
MONMOUTH SUBSECTION
ALIGNMENT M
OVERHEAD PLANNING STUDY
E FLORAL AVE

CONTRACT NO. HSR 06-0003
DRAWING NO. ST2109
SCALE AS SHOWN
SHEET NO. 7 OF 9

PRE45072 12/24/2013 9:25:28 AM c:\pwworking\hmm\external\pre45072\dms91110\FB-ST-2109-M.dgn

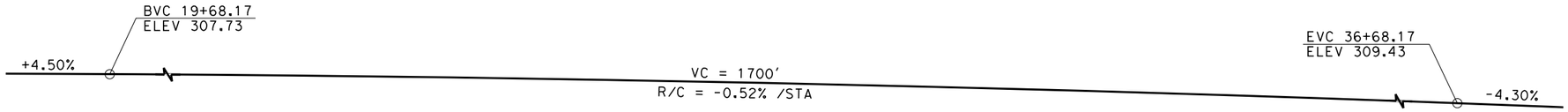

PROFILE GRADE
NO SCALE

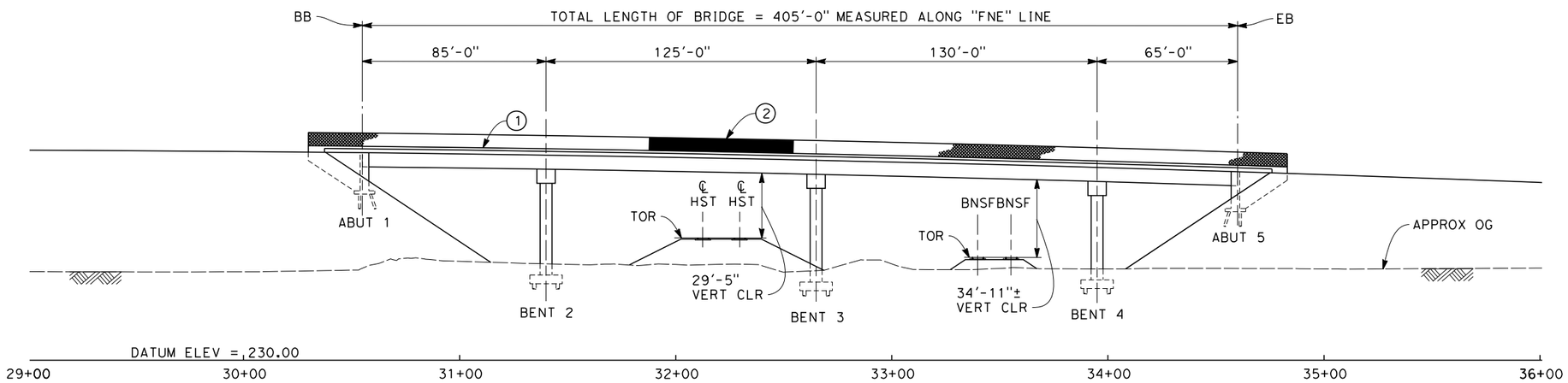

ELEVATION
SCALE: 1"=30'

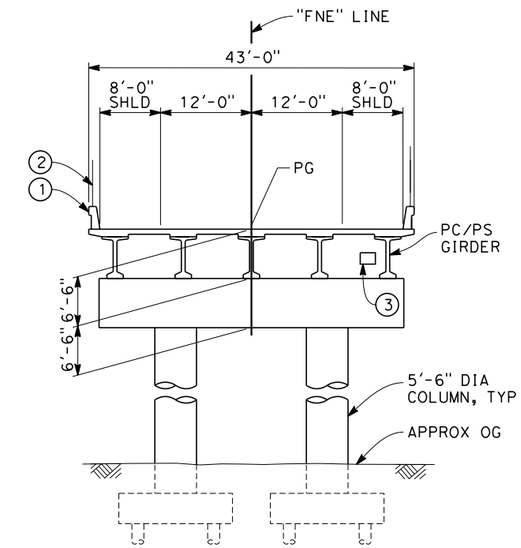

TYPICAL SECTION
SCALE: 1"=10'

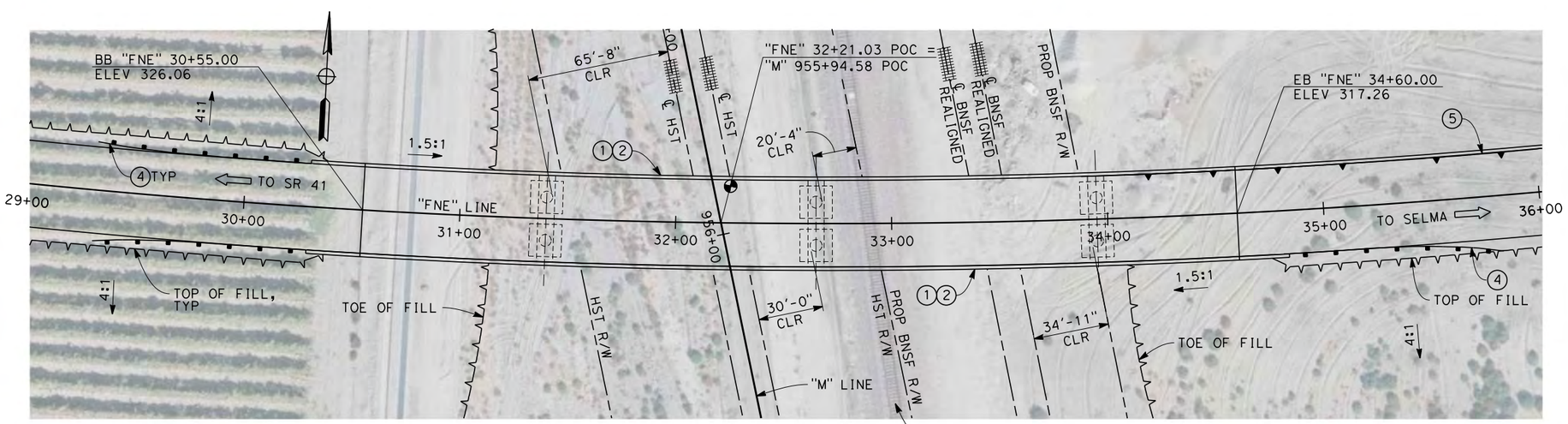

PLAN
SCALE: 1"=30'

NOTES:

1. ALL PILES NOT SHOWN
2. FOR MINIMUM VERTICAL CLEARANCES, HORIZONTAL CURVE DATA, AND DETAILS NOT SHOWN, SEE ROADWAY PLANS.

LEGEND:

1. CONCRETE BARRIER WITH AR FENCE
2. AR FENCE WITH SOLID PLATE OVER HST
3. FUTURE UTILITY ENCASEMENT OPENING
4. MBGR
5. RETAINING WALL

10 0 10 20 — 1"=10'

30 0 30 60 — 1"=30'

REV	DATE	BY	CHK	APP	DESCRIPTION

DESIGNED BY L. SMITH
DRAWN BY T. PRETZER
CHECKED BY E. MORAN
IN CHARGE R. COFFIN
DATE 12/31/13

RECORD SET 15% DESIGN SUBMISSION - NOT FOR CONSTRUCTION

URS | HMM | ARUP
CALIFORNIA HIGH-SPEED TRAIN

CALIFORNIA HIGH-SPEED RAIL AUTHORITY

CALIFORNIA HIGH-SPEED TRAIN PROJECT
FRESNO TO BAKERSFIELD
MONMOUTH SUBSECTION
ALIGNMENT M
OVERHEAD PLANNING STUDY
E NEBRASKA AVE

CONTRACT NO. HSR 06-0003
DRAWING NO. ST2111
SCALE AS SHOWN
SHEET NO. 8 OF 9

PRE45072 12/24/2013 9:05:27 AM c:\pwworking\hmm\external\pre45072\dms91110\FB-ST-2111-M.dgn

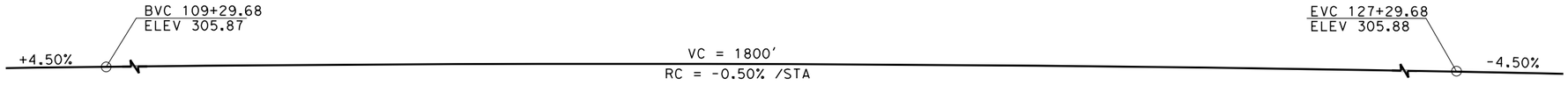

PROFILE GRADE
NO SCALE

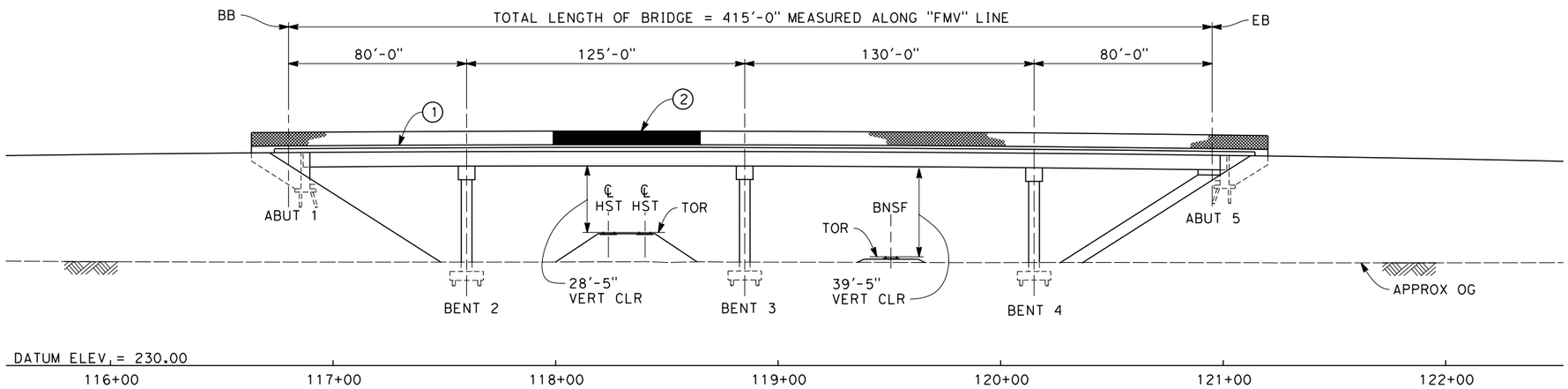

ELEVATION
SCALE: 1"=30'

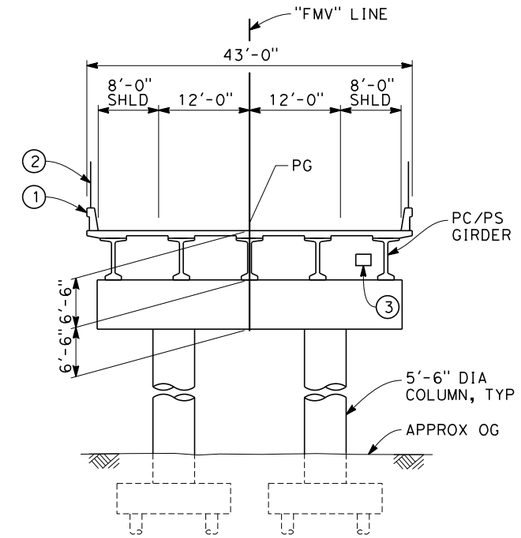

TYPICAL SECTION
SCALE: 1"=10'

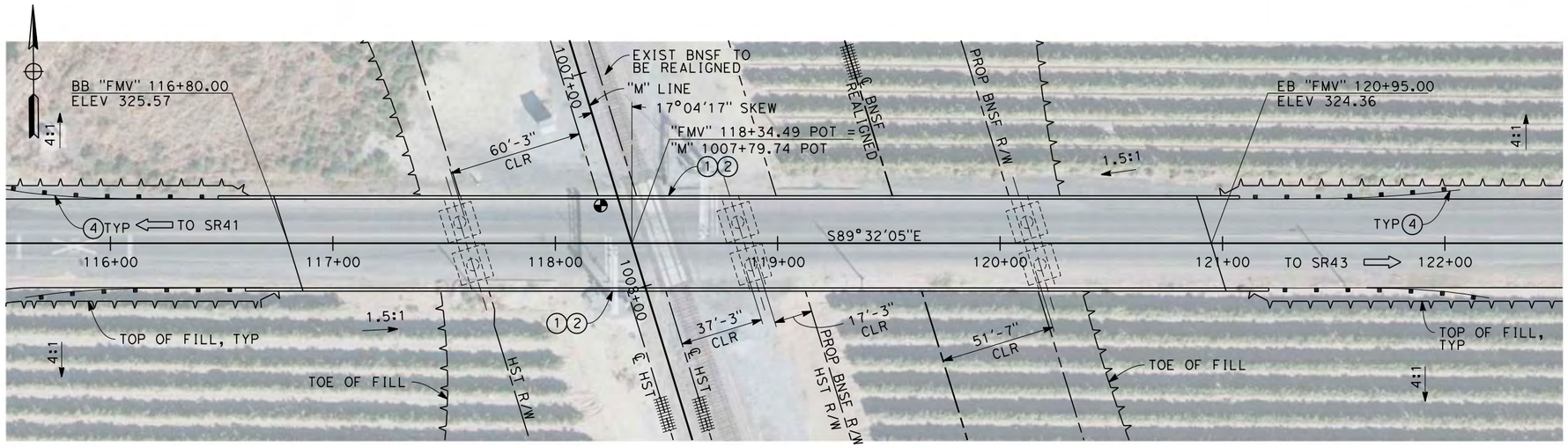

PLAN
SCALE: 1"=30'

NOTES:

1. ALL PILES NOT SHOWN
2. FOR MINIMUM VERTICAL CLEARANCES, HORIZONTAL CURVE DATA, AND DETAILS NOT SHOWN, SEE ROADWAY PLANS.

LEGEND:

1. CONCRETE BARRIER WITH AR FENCE
2. AR FENCE WITH SOLID PLATE OVER HST
3. FUTURE UTILITY ENCASEMENT OPENING
4. MBGR

10 0 10 20 — 1"=10'

30 0 30 60 — 1"=30'

REV	DATE	BY	CHK	APP	DESCRIPTION

DESIGNED BY L. SMITH
DRAWN BY T. PRETZER
CHECKED BY E. MORAN
IN CHARGE R. COFFIN
DATE 12/31/13

RECORD SET 15% DESIGN SUBMISSION - NOT FOR CONSTRUCTION

URS | HMM | ARUP
CALIFORNIA HIGH-SPEED TRAIN

CALIFORNIA HIGH-SPEED RAIL AUTHORITY

CALIFORNIA HIGH-SPEED TRAIN PROJECT
FRESNO TO BAKERSFIELD
MONMOUTH SUBSECTION
ALIGNMENT M
OVERHEAD PLANNING STUDY
E MOUNTAIN VIEW AVE

CONTRACT NO. HSR 06-0003
DRAWING NO. ST2113
SCALE AS SHOWN
SHEET NO. 9 OF 9

PRE45072 12/24/2013 9:32:45 AM c:\pwworking\hmm\external\pre45072\dms91110\FB-ST-2113-M.dgn

12/27/2013 11:22:14 AM c:\pwworking\hmm\external\bar59603\dms91106\FB-SB-0050-H.dgn

BAR59603

REV	DATE	BY	CHK	APP	DESCRIPTION

DESIGNED BY B. LUSCOMBE
DRAWN BY D. BARNHART
CHECKED BY M. ANDREWS
IN CHARGE R. COFFIN
DATE 12/31/13

RECORD SET 15% DESIGN SUBMISSION - NOT FOR CONSTRUCTION

URS | HMM | ARUP
CALIFORNIA HIGH-SPEED TRAIN

CALIFORNIA HIGH-SPEED RAIL AUTHORITY

CALIFORNIA HIGH-SPEED TRAIN PROJECT
FRESNO TO BAKERSFIELD
HANFORD SUBSECTION
ALIGNMENT H
OVERHEAD PLANNING STUDY
KEY MAP

CONTRACT NO. HSR 06-0003
DRAWING NO. SB0050
SCALE AS SHOWN
SHEET NO. 1 OF 14

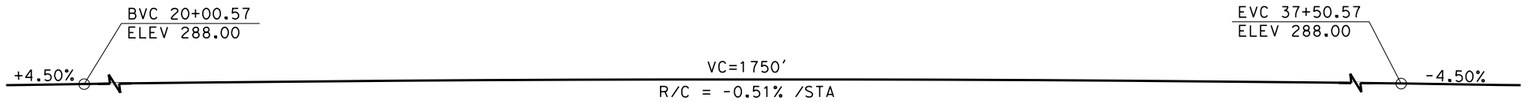

PROFILE GRADE
NO SCALE

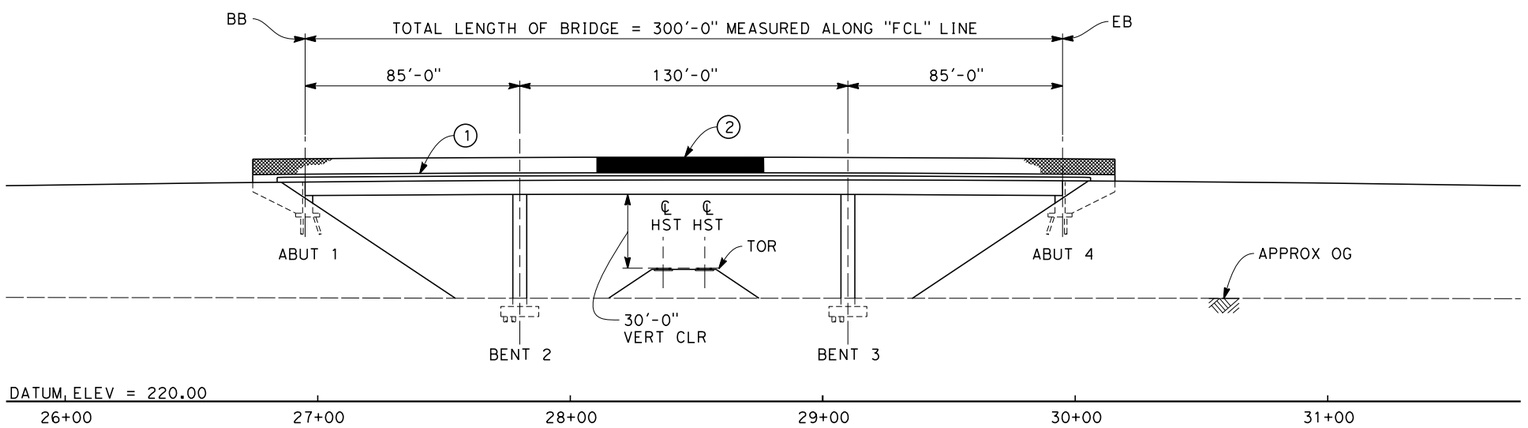

ELEVATION
SCALE: 1"=30'

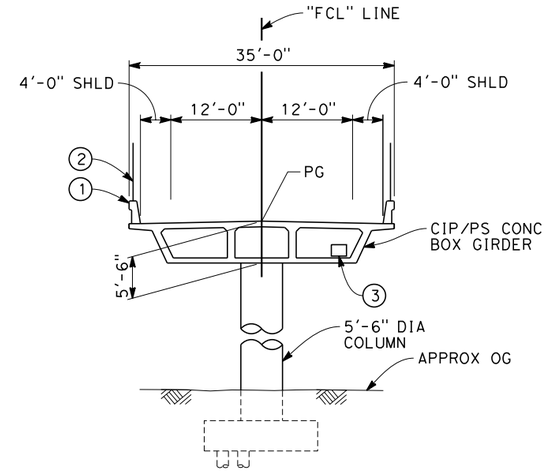

TYPICAL SECTION
SCALE: 1"=10'

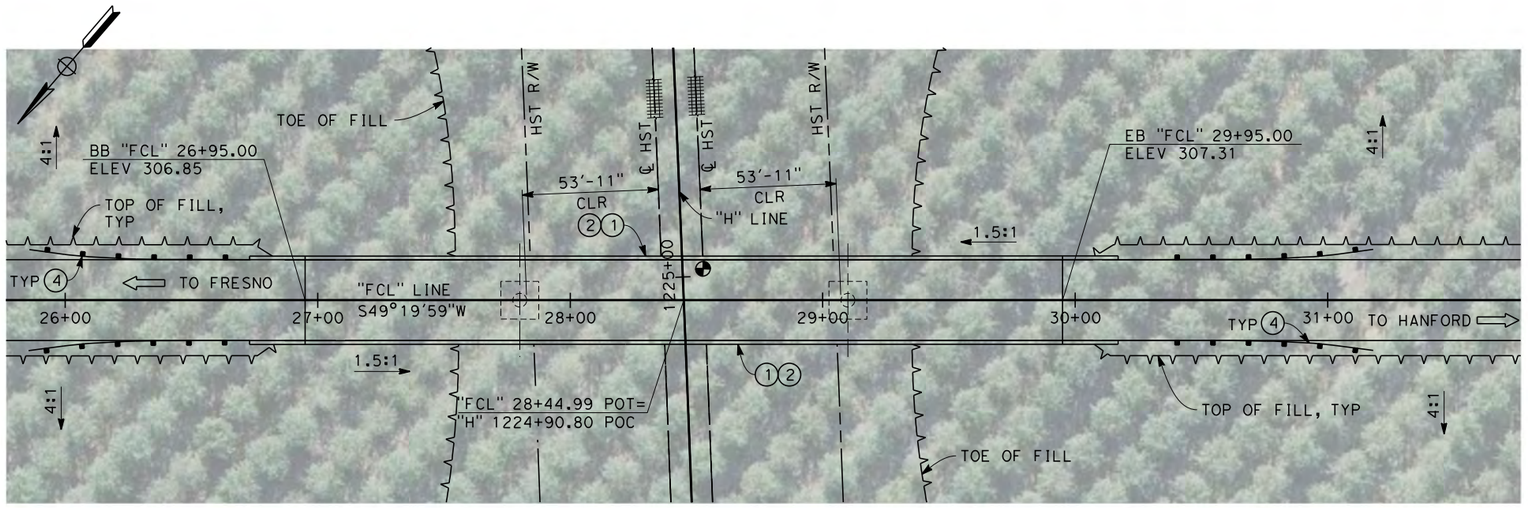

PLAN
SCALE: 1"=30'

NOTES:

1. ALL PILES NOT SHOWN
2. FOR MINIMUM VERTICAL CLEARANCES, HORIZONTAL CURVE DATA, AND DETAILS NOT SHOWN, SEE ROADWAY PLANS.

LEGEND:

1. CONCRETE BARRIER WITH AR FENCE
2. AR FENCE WITH SOLID PLATE OVER HST
3. FUTURE UTILITY ENCASEMENT OPENING
4. MBGR

10 0 10 20 — 1"=10'

30 0 30 60 — 1"=30'

REV	DATE	BY	CHK	APP	DESCRIPTION

DESIGNED BY B. LUSCOMBE
DRAWN BY D. BARNHART
CHECKED BY M. ANDREWS
IN CHARGE R. COFFIN
DATE 12/31/13

RECORD SET 15% DESIGN SUBMISSION - NOT FOR CONSTRUCTION

URS | HMM | ARUP
CALIFORNIA HIGH-SPEED TRAIN

CALIFORNIA HIGH-SPEED RAIL AUTHORITY

CALIFORNIA HIGH-SPEED TRAIN PROJECT
FRESNO TO BAKERSFIELD
HANFORD SUBSECTION
ALIGNMENT H
OVERHEAD PLANNING STUDY
S CLOVIS AVE

CONTRACT NO. HSR 06-0003
DRAWING NO. ST2117
SCALE AS SHOWN
SHEET NO. 2 OF 14

PRE45072 12/26/2013 4:36:31 PM c:\pwworking\hmm\external\pre45072\dms91106\FB-ST-2117-H.dgn

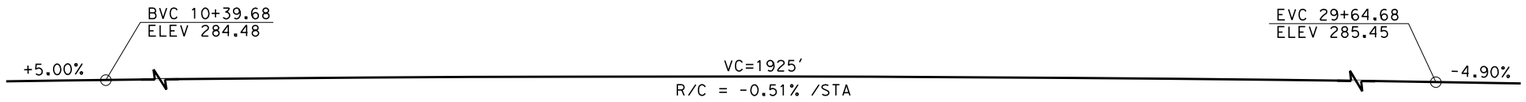

PROFILE GRADE
NO SCALE

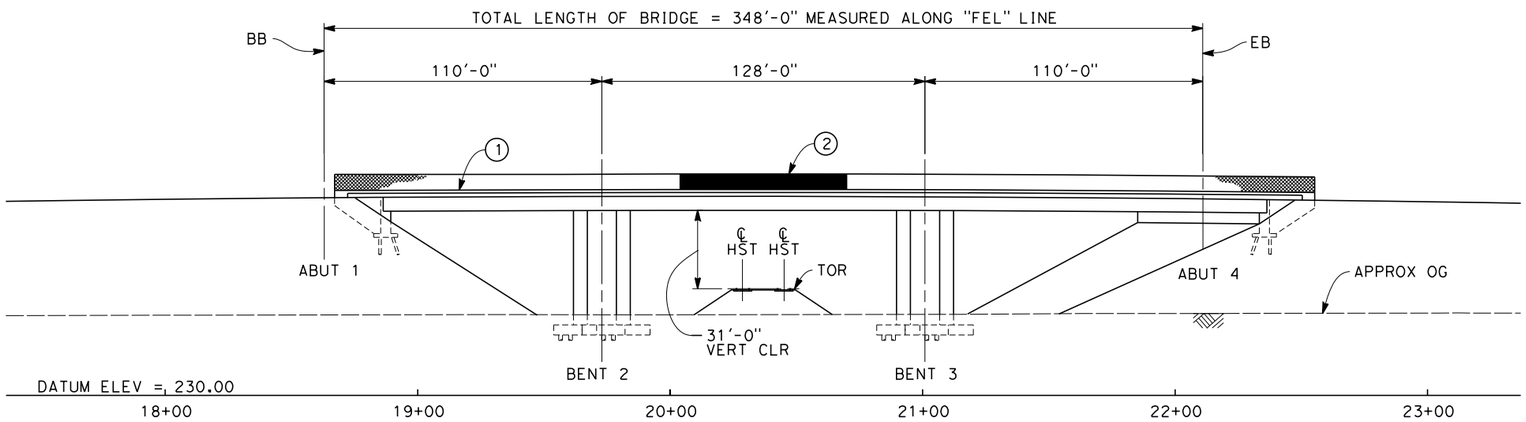

ELEVATION
SCALE: 1"=30'

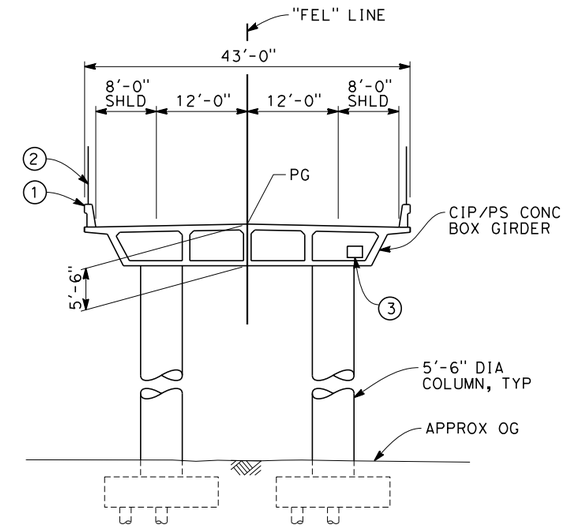

TYPICAL SECTION
SCALE: 1"=10'

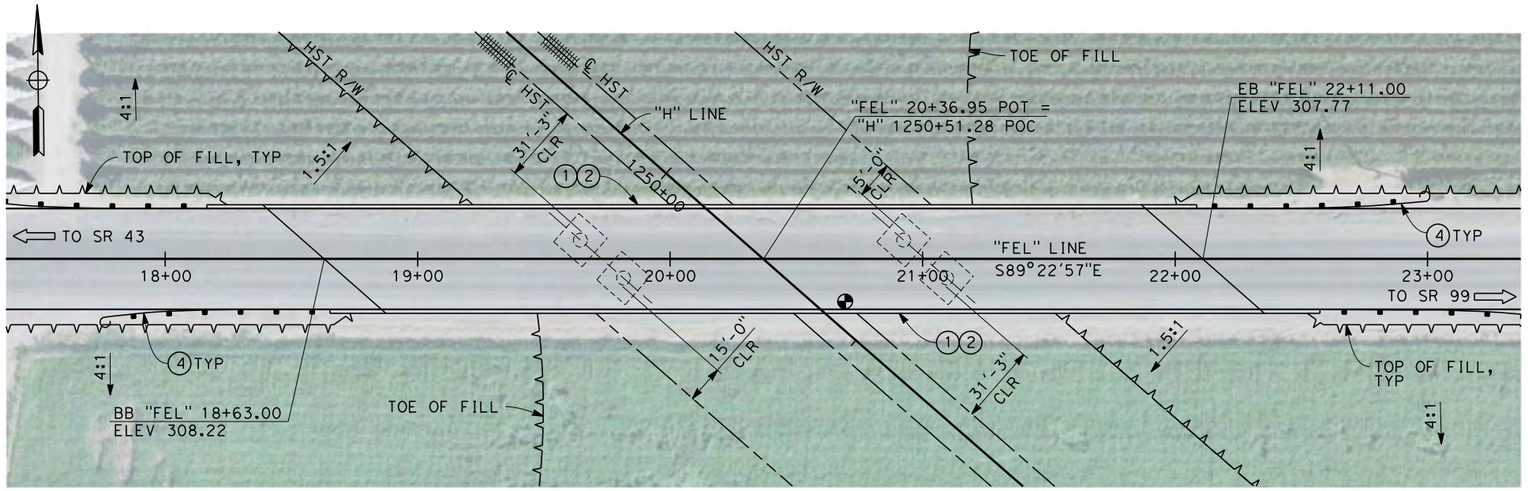

PLAN
SCALE: 1"=30'

NOTES:

1. ALL PILES NOT SHOWN
2. FOR MINIMUM VERTICAL CLEARANCES, HORIZONTAL CURVE DATA, AND DETAILS NOT SHOWN, SEE ROADWAY PLANS.

LEGEND:

1. CONCRETE BARRIER WITH AR FENCE
2. AR FENCE WITH SOLID PLATE OVER HST
3. FUTURE UTILITY ENCASEMENT OPENING
4. MBGR

10 0 10 20 — 1"=10'

30 0 30 60 — 1"=30'

REV	DATE	BY	CHK	APP	DESCRIPTION

DESIGNED BY B. LUSCOMBE
DRAWN BY D. BARNHART
CHECKED BY M. ANDREWS
IN CHARGE R. COFFIN
DATE 12/31/13

RECORD SET 15% DESIGN SUBMISSION - NOT FOR CONSTRUCTION

URS | HMM | ARUP
CALIFORNIA HIGH-SPEED TRAIN

CALIFORNIA HIGH-SPEED RAIL AUTHORITY

CALIFORNIA HIGH-SPEED TRAIN PROJECT
FRESNO TO BAKERSFIELD
HANFORD SUBSECTION
ALIGNMENT H
OVERHEAD PLANNING STUDY
E ELKHORN AVE

CONTRACT NO. HSR 06-0003
DRAWING NO. ST2119
SCALE AS SHOWN
SHEET NO. 3 OF 14

PRE45072 12/26/2013 4:47:49 PM c:\pwworking\hmm\external\pre45072\dms91106\FB-ST-2119-H.dgn

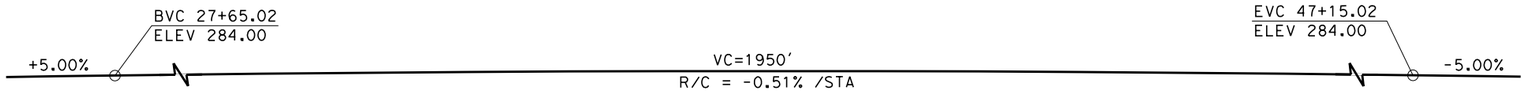

PROFILE GRADE
NO SCALE

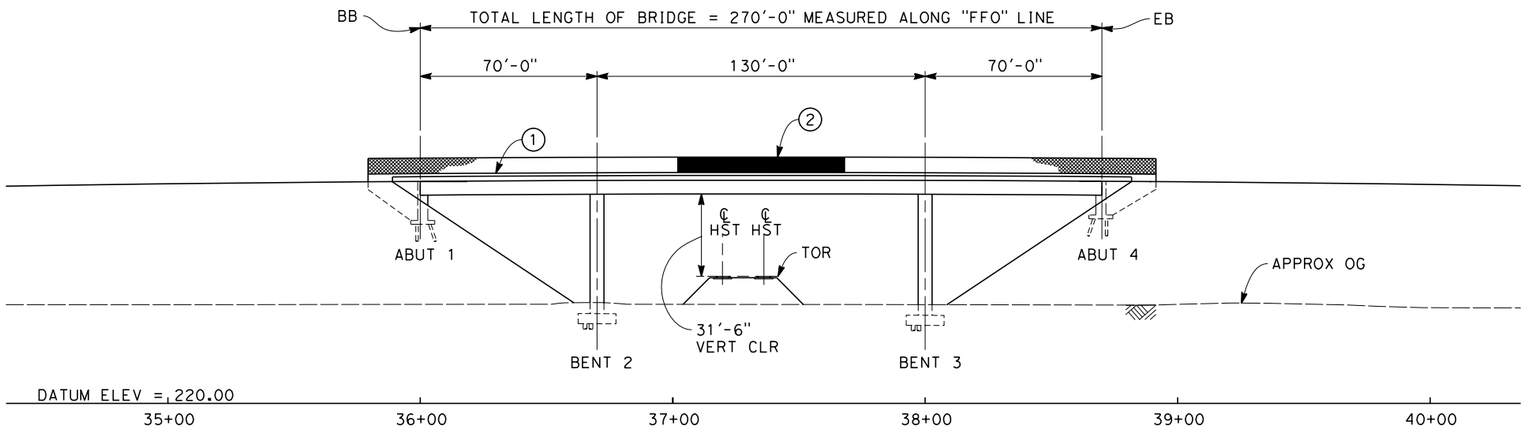

ELEVATION
SCALE: 1"=30'

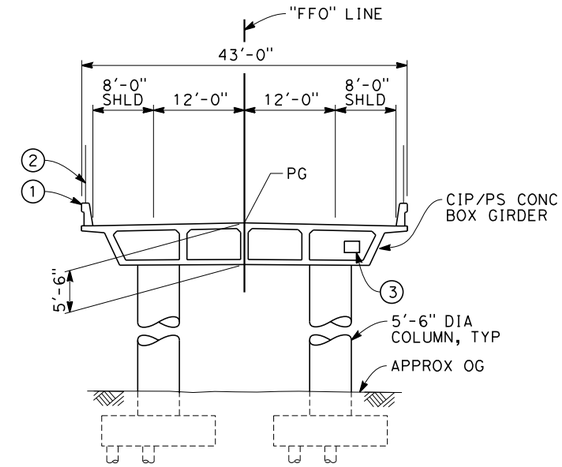

TYPICAL SECTION
SCALE: 1"=10'

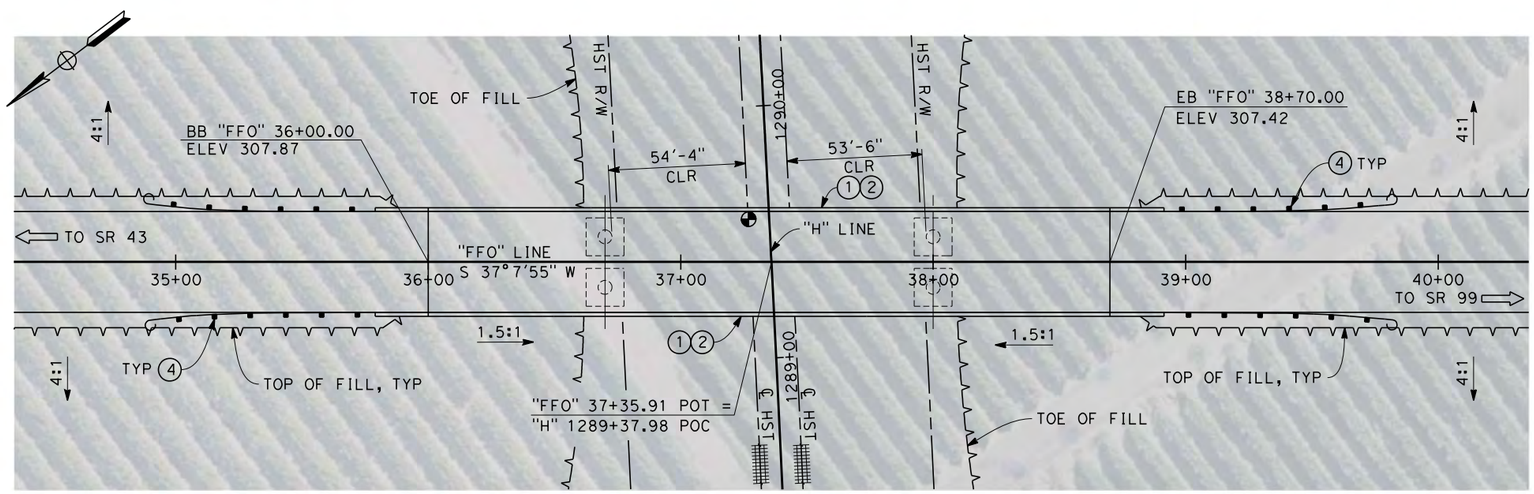

PLAN
SCALE: 1"=30'

NOTES:

1. ALL PILES NOT SHOWN
2. FOR MINIMUM VERTICAL CLEARANCES, HORIZONTAL CURVE DATA, AND DETAILS NOT SHOWN, SEE ROADWAY PLANS.

LEGEND:

1. CONCRETE BARRIER WITH AR FENCE
2. AR FENCE WITH SOLID PLATE OVER HST
3. FUTURE UTILITY ENCASEMENT OPENING
4. MBGR

10 0 10 20 — 1"=10'

30 0 30 60 — 1"=30'

REV	DATE	BY	CHK	APP	DESCRIPTION

DESIGNED BY B. LUSCOMBE
DRAWN BY D. BARNHART
CHECKED BY M. ANDREWS
IN CHARGE R. COFFIN
DATE 12/31/13

RECORD SET 15% DESIGN SUBMISSION - NOT FOR CONSTRUCTION

URS | HMM | ARUP
CALIFORNIA HIGH-SPEED TRAIN

CALIFORNIA HIGH-SPEED RAIL AUTHORITY

CALIFORNIA HIGH-SPEED TRAIN PROJECT
FRESNO TO BAKERSFIELD
HANFORD SUBSECTION
ALIGNMENT H
OVERHEAD PLANNING STUDY
S FOWLER AVE

CONTRACT NO. HSR 06-0003
DRAWING NO. ST2121
SCALE AS SHOWN
SHEET NO. 4 OF 14

PRE45072 12/27/2013 7:46:49 AM c:\pwworking\hmm\external\pre45072\dms91106\FB-ST-2121-H.dgn

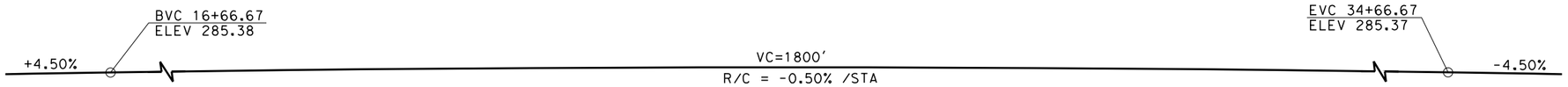

PROFILE GRADE
NO SCALE

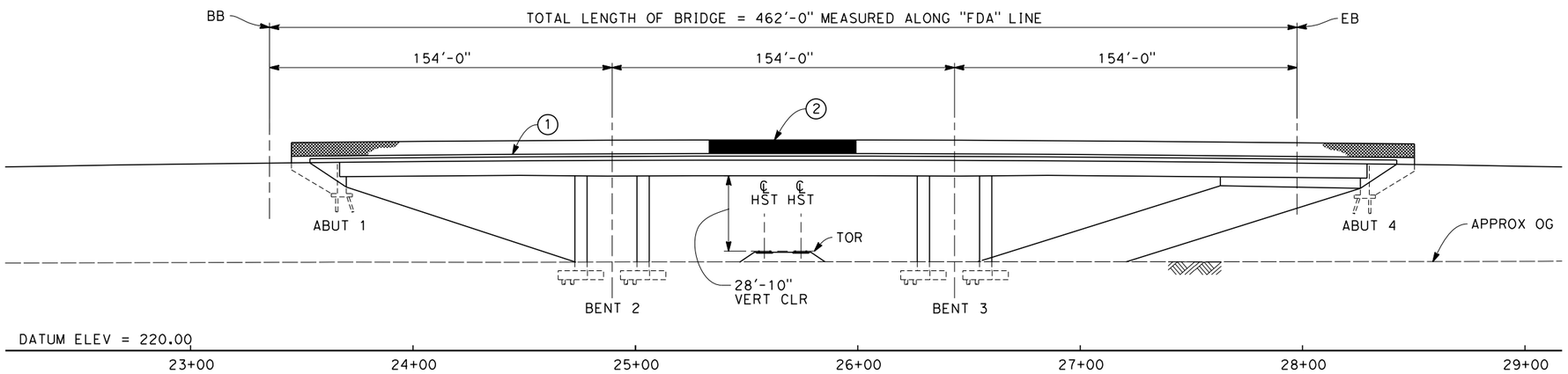

ELEVATION
SCALE: 1"=30'

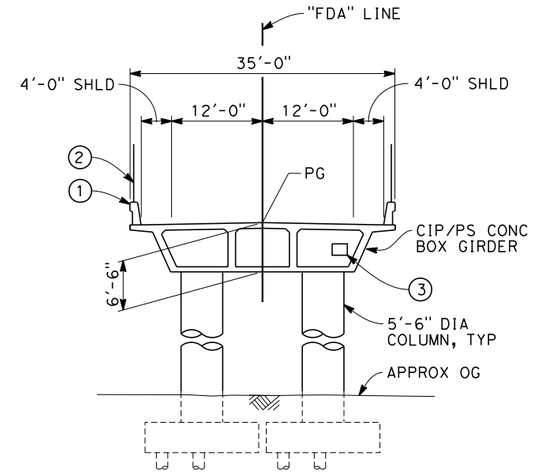

TYPICAL SECTION
SCALE: 1"=10'

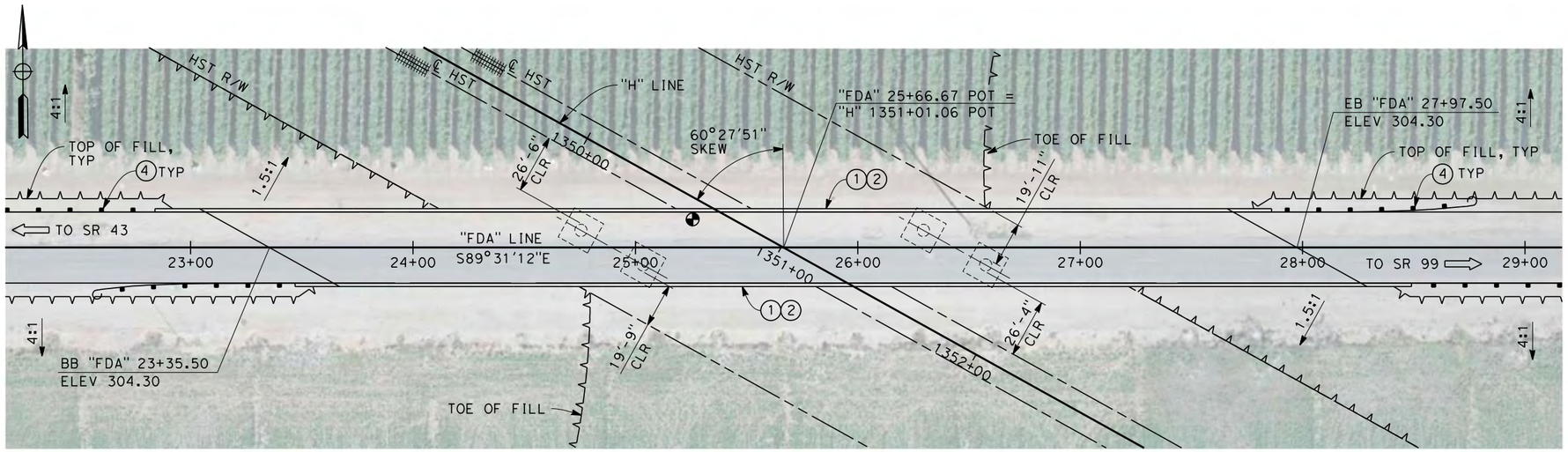

PLAN
SCALE: 1"=30'

NOTES:

1. ALL PILES NOT SHOWN
2. FOR MINIMUM VERTICAL CLEARANCES, HORIZONTAL CURVE DATA, AND DETAILS NOT SHOWN, SEE ROADWAY PLANS.

LEGEND:

1. CONCRETE BARRIER WITH AR FENCE
2. AR FENCE WITH SOLID PLATE OVER HST
3. FUTURE UTILITY ENCASEMENT OPENING
4. MBGR

10 0 10 20 — 1"=10'

30 0 30 60 — 1"=30'

REV	DATE	BY	CHK	APP	DESCRIPTION

DESIGNED BY B. LUSCOMBE
DRAWN BY D. BARNHART
CHECKED BY M. ANDREWS
IN CHARGE R. COFFIN
DATE 12/31/13

RECORD SET 15% DESIGN SUBMISSION - NOT FOR CONSTRUCTION

URS | HMM | ARUP
CALIFORNIA HIGH-SPEED TRAIN

CALIFORNIA HIGH-SPEED RAIL AUTHORITY

CALIFORNIA HIGH-SPEED TRAIN PROJECT
FRESNO TO BAKERSFIELD
HANFORD SUBSECTION
ALIGNMENT H
OVERHEAD PLANNING STUDY
E DAVIS AVE

CONTRACT NO. HSR 06-0003
DRAWING NO. ST2123
SCALE AS SHOWN
SHEET NO. 5 OF 14

PRE45072 12/27/2013 7:58:00 AM c:\pwworking\hmm\external\pre45072\dms91106\FB-ST-2123-H.dgn

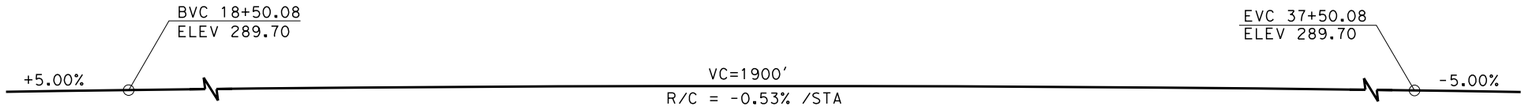

PROFILE GRADE
NO SCALE

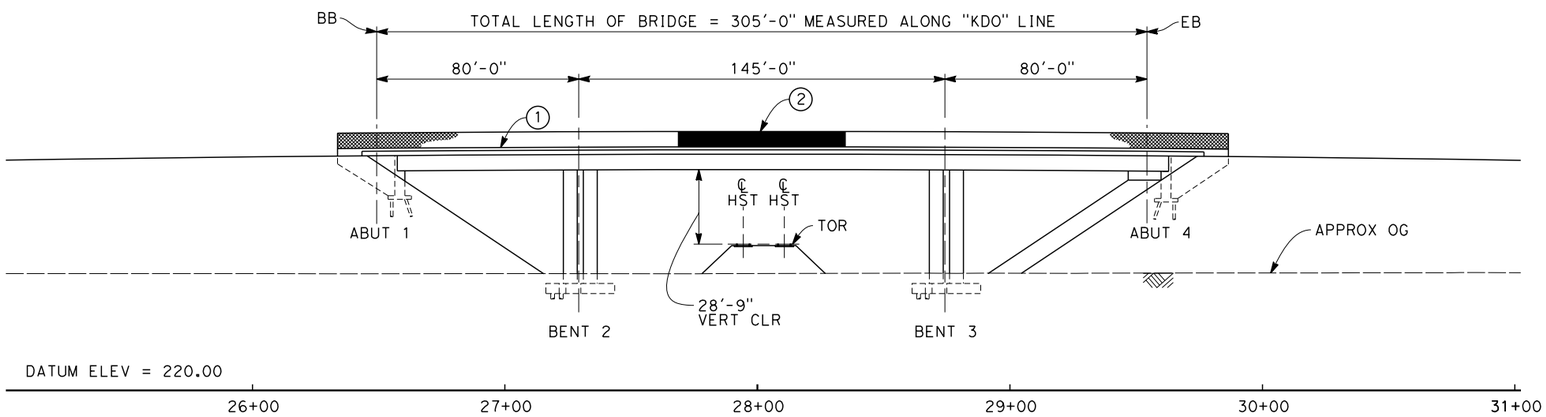

ELEVATION
SCALE: 1"=30'

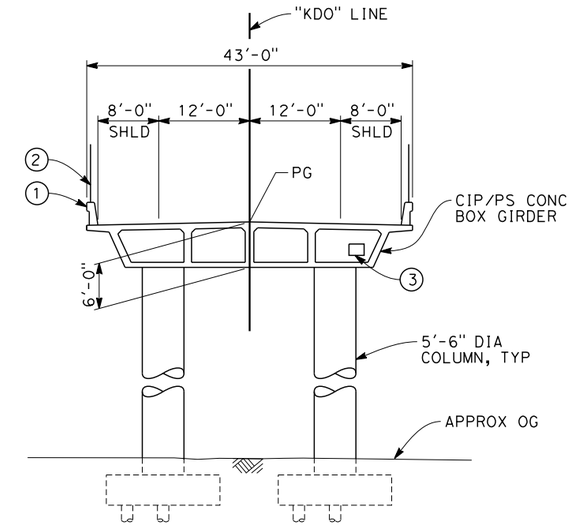

TYPICAL SECTION
SCALE: 1"=10'

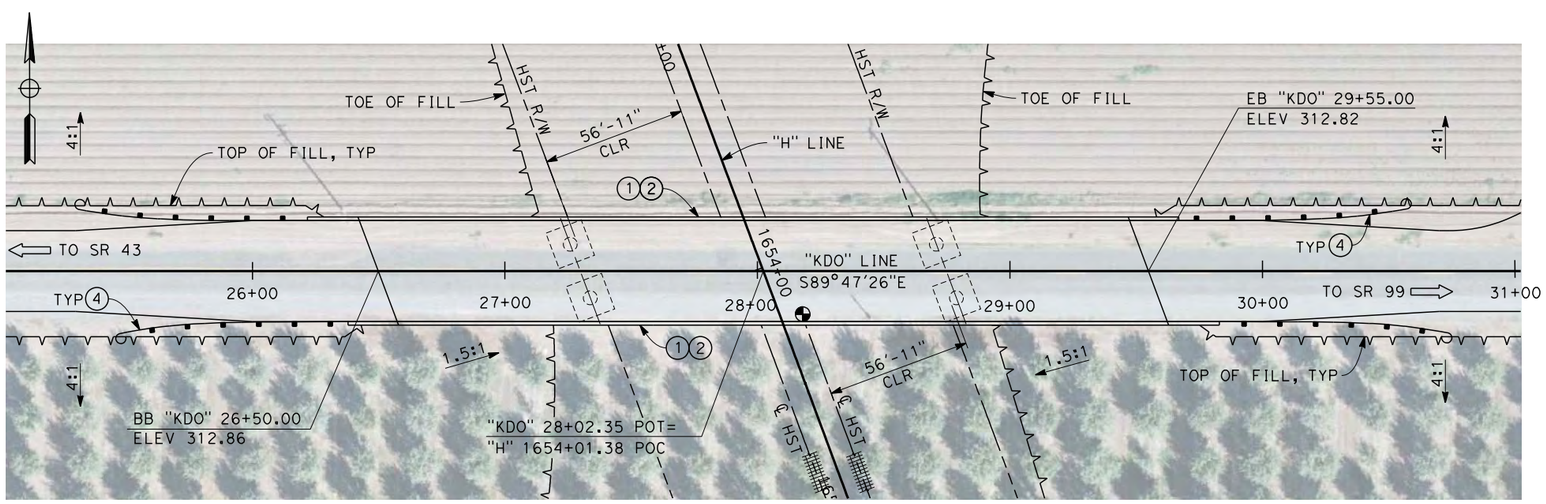

PLAN
SCALE: 1"=30'

NOTES:

1. ALL PILES NOT SHOWN
2. FOR MINIMUM VERTICAL CLEARANCES, HORIZONTAL CURVE DATA, AND DETAILS NOT SHOWN, SEE ROADWAY PLANS.

LEGEND:

1. CONCRETE BARRIER WITH AR FENCE
2. AR FENCE WITH SOLID PLATE OVER HST
3. FUTURE UTILITY ENCASEMENT OPENING
4. MBGR

10 0 10 20 — 1"=10'

30 0 30 60 — 1"=30'

REV	DATE	BY	CHK	APP	DESCRIPTION

DESIGNED BY B. LUSCOMBE
DRAWN BY D. BARNHART
CHECKED BY M. ANDREWS
IN CHARGE R. COFFIN
DATE 12/31/13

RECORD SET 15% DESIGN SUBMISSION - NOT FOR CONSTRUCTION

URS | HMM | ARUP
CALIFORNIA HIGH-SPEED TRAIN

CALIFORNIA HIGH-SPEED RAIL AUTHORITY

CALIFORNIA HIGH-SPEED TRAIN PROJECT
FRESNO TO BAKERSFIELD
HANFORD SUBSECTION
ALIGNMENT H
OVERHEAD PLANNING STUDY
DOVER AVE

CONTRACT NO. HSR 06-0003
DRAWING NO. ST2129
SCALE AS SHOWN
SHEET NO. 6 OF 14

12/27/2013 12:53:00 PM c:\pwworking\hmm\external\lus60322\dms91106\FB-ST-2129-H.dgn
LUS60322

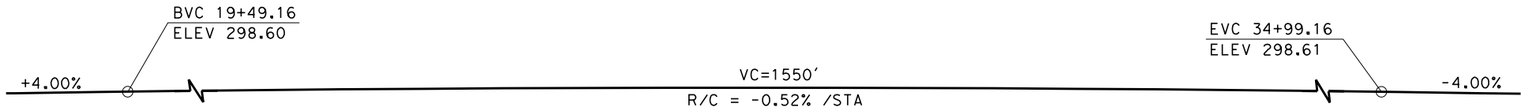

PROFILE GRADE
NO SCALE

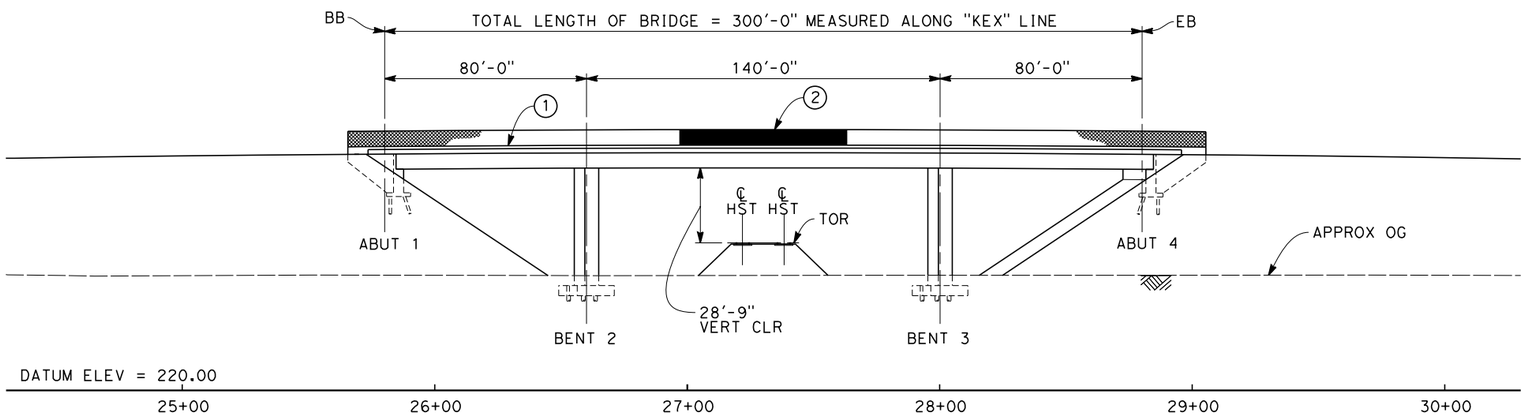

ELEVATION
SCALE: 1"=30'

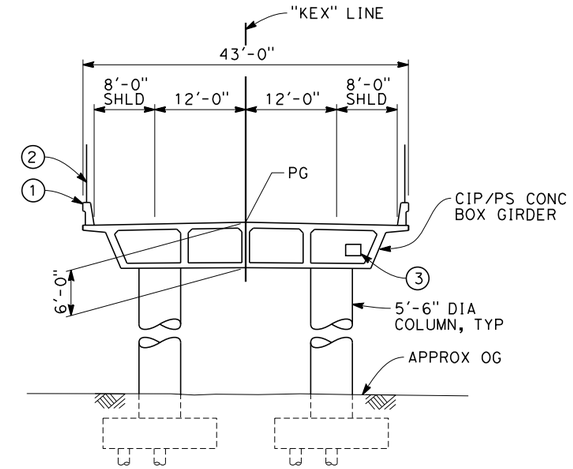

TYPICAL SECTION
SCALE: 1"=10'

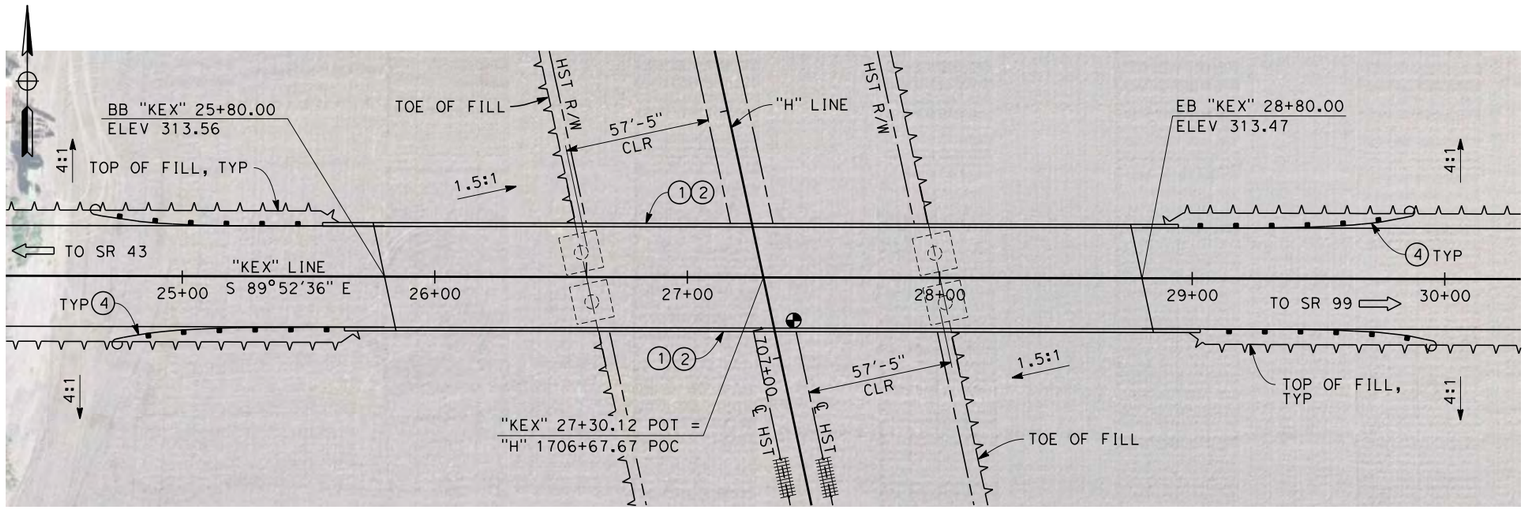

PLAN
SCALE: 1"=30'

NOTES:

1. ALL PILES NOT SHOWN
2. FOR MINIMUM VERTICAL CLEARANCES, HORIZONTAL CURVE DATA, AND DETAILS NOT SHOWN, SEE ROADWAY PLANS.

LEGEND:

1. CONCRETE BARRIER WITH AR FENCE
2. AR FENCE WITH SOLID PLATE OVER HST
3. FUTURE UTILITY ENCASEMENT OPENING
4. MBGR

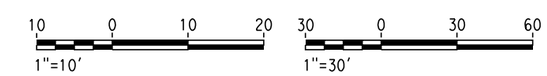

REV	DATE	BY	CHK	APP	DESCRIPTION

DESIGNED BY B. LUSCOMBE
DRAWN BY D. BARNHART
CHECKED BY M. ANDREWS
IN CHARGE R. COFFIN
DATE 12/31/13

RECORD SET 15% DESIGN SUBMISSION - NOT FOR CONSTRUCTION

URS | HMM | ARUP
CALIFORNIA HIGH-SPEED TRAIN

CALIFORNIA HIGH-SPEED RAIL AUTHORITY

CALIFORNIA HIGH-SPEED TRAIN PROJECT
FRESNO TO BAKERSFIELD
HANFORD SUBSECTION
ALIGNMENT H
OVERHEAD PLANNING STUDY
EXCELSIOR AVE

CONTRACT NO. HSR 06-0003
DRAWING NO. ST2133
SCALE AS SHOWN
SHEET NO. 7 OF 14

PRE45072 12/27/2013 8:40:20 AM c:\pwworking\hmm\external\pre45072\dms91106\FB-ST-2133-H.dgn

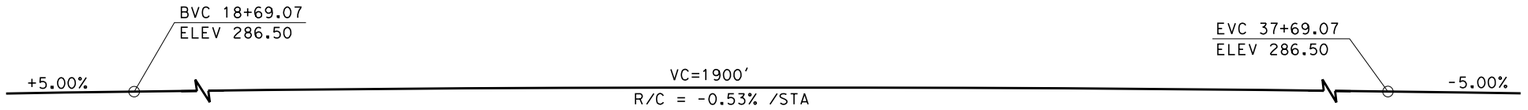

PROFILE GRADE
NO SCALE

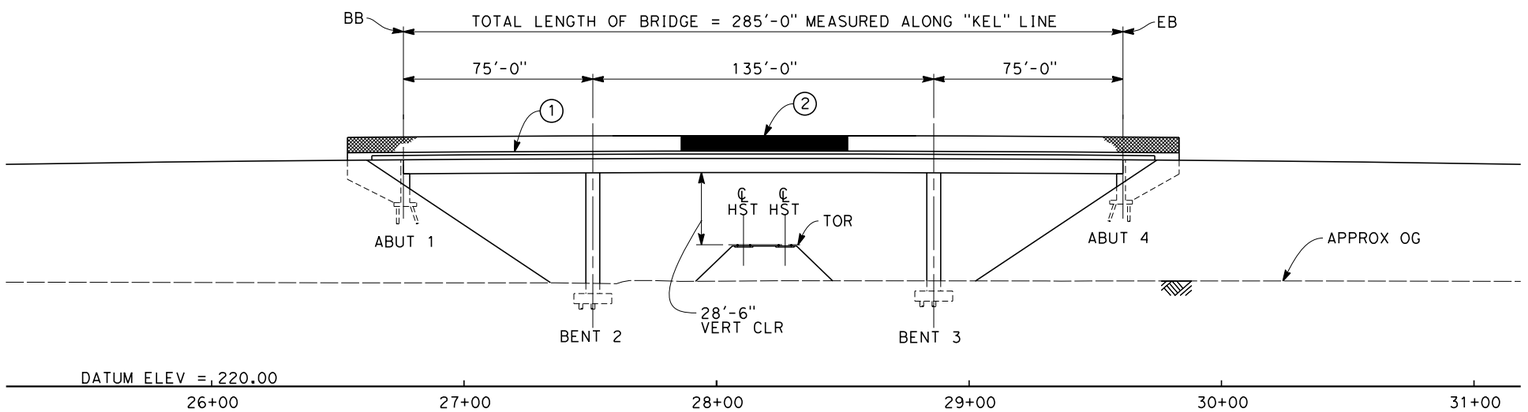

ELEVATION
SCALE: 1"=30'

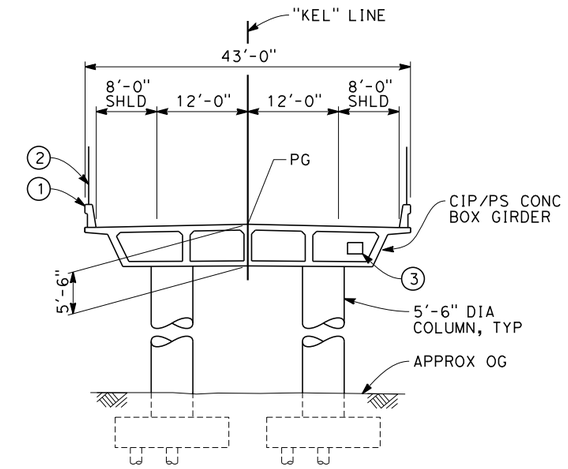

TYPICAL SECTION
SCALE: 1"=10'

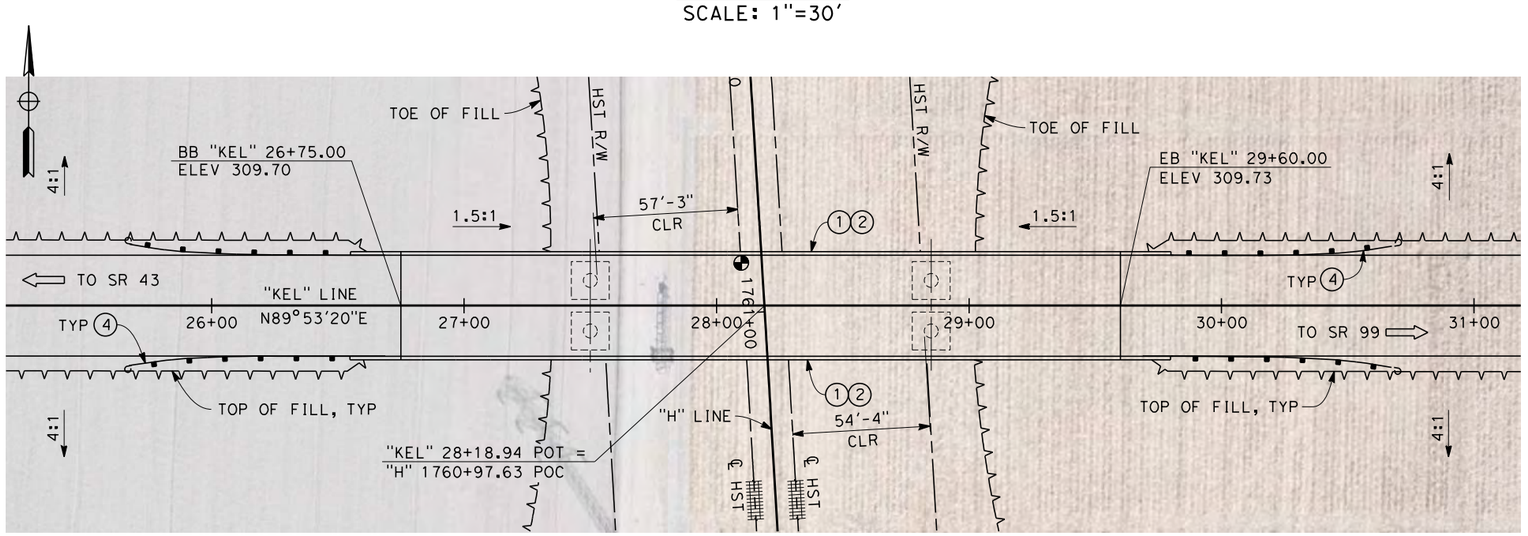

PLAN
SCALE: 1"=30'

NOTES:

1. ALL PILES NOT SHOWN
2. FOR MINIMUM VERTICAL CLEARANCES, HORIZONTAL CURVE DATA, AND DETAILS NOT SHOWN, SEE ROADWAY PLANS.

LEGEND:

1. CONCRETE BARRIER WITH AR FENCE
2. AR FENCE WITH SOLID PLATE OVER HST
3. FUTURE UTILITY ENCASEMENT OPENING
4. MBGR

10 0 10 20 — 1"=10'

30 0 30 60 — 1"=30'

REV	DATE	BY	CHK	APP	DESCRIPTION

DESIGNED BY B. LUSCOMBE
DRAWN BY D. BARNHART
CHECKED BY M. ANDREWS
IN CHARGE R. COFFIN
DATE 12/31/13

RECORD SET 15% DESIGN SUBMISSION - NOT FOR CONSTRUCTION

URS | HMM | ARUP
CALIFORNIA HIGH-SPEED TRAIN

CALIFORNIA HIGH-SPEED RAIL AUTHORITY

CALIFORNIA HIGH-SPEED TRAIN PROJECT
FRESNO TO BAKERSFIELD
HANFORD SUBSECTION
ALIGNMENT H
OVERHEAD PLANNING STUDY
ELDER AVE

CONTRACT NO. HSR 06-0003
DRAWING NO. ST2135
SCALE AS SHOWN
SHEET NO. 8 OF 14

PRE45072 12/27/2013 8:50:33 AM c:\pwworking\hmm\external\pre45072\dms91106\FB-ST-2135-H.dgn

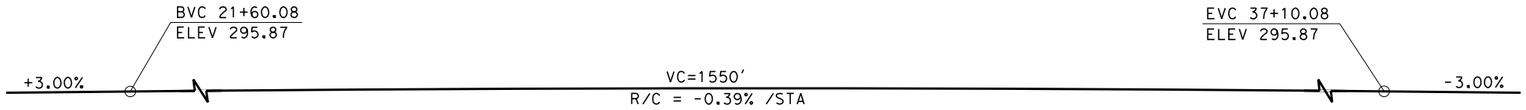

PROFILE GRADE
NO SCALE

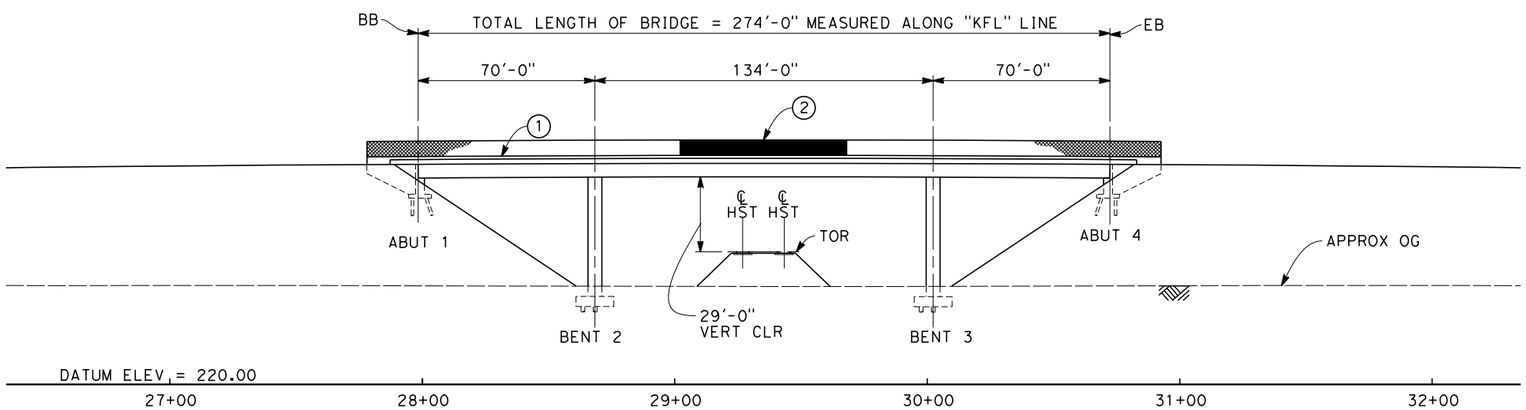

ELEVATION
SCALE: 1"=30'

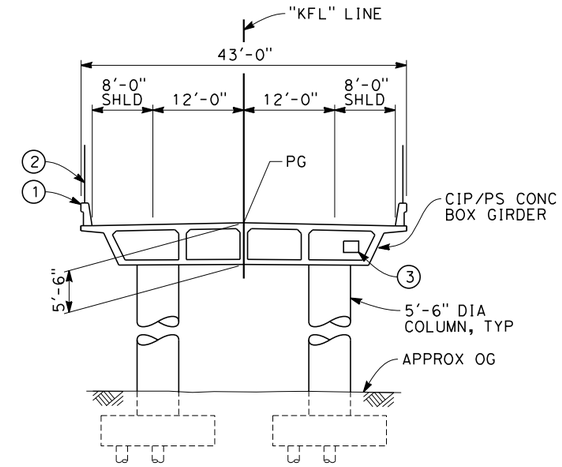

TYPICAL SECTION
SCALE: 1"=10'

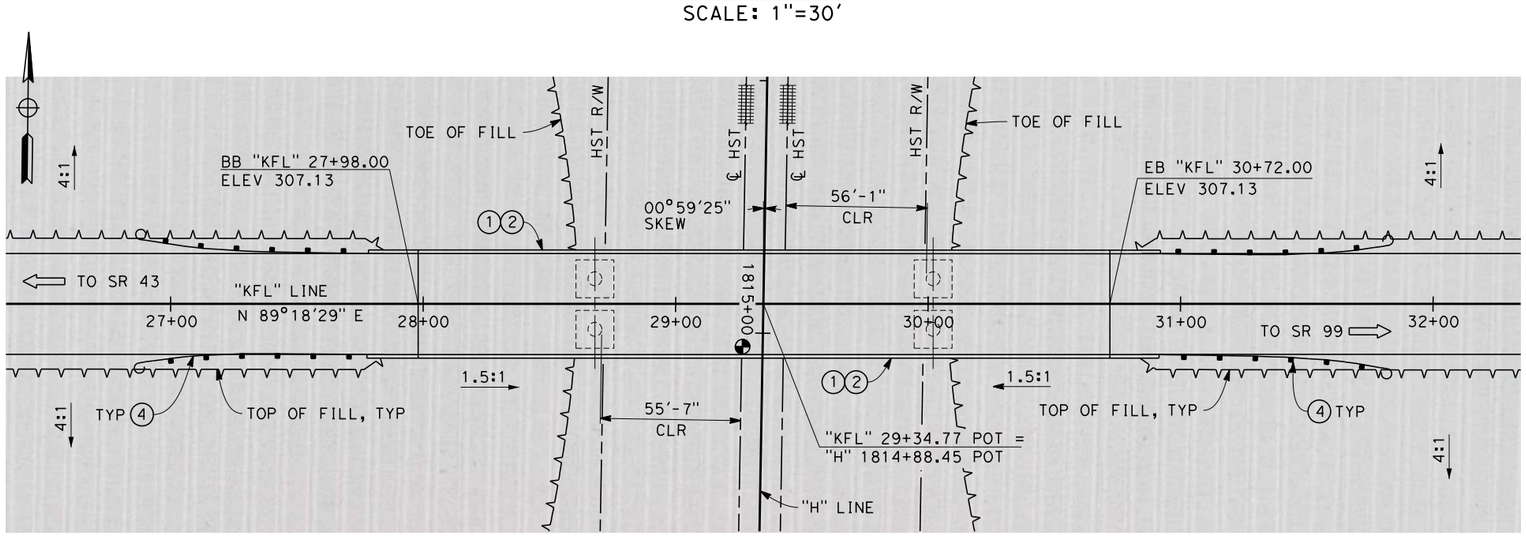

PLAN
SCALE: 1"=30'

NOTES:

1. ALL PILES NOT SHOWN
2. FOR MINIMUM VERTICAL CLEARANCES, HORIZONTAL CURVE DATA, AND DETAILS NOT SHOWN, SEE ROADWAY PLANS.

LEGEND:

1. CONCRETE BARRIER WITH AR FENCE
2. AR FENCE WITH SOLID PLATE OVER HST
3. FUTURE UTILITY ENCASEMENT OPENING
4. MBGR

10 0 10 20 — 1"=10'

30 0 30 60 — 1"=30'

REV	DATE	BY	CHK	APP	DESCRIPTION

DESIGNED BY B. LUSCOMBE
DRAWN BY D. BARNHART
CHECKED BY M. ANDREWS
IN CHARGE R. COFFIN
DATE 12/31/13

RECORD SET 15% DESIGN SUBMISSION - NOT FOR CONSTRUCTION

URS | HMM | ARUP
CALIFORNIA HIGH-SPEED TRAIN

CALIFORNIA HIGH-SPEED RAIL AUTHORITY

CALIFORNIA HIGH-SPEED TRAIN PROJECT
FRESNO TO BAKERSFIELD
HANFORD SUBSECTION
ALIGNMENT H
OVERHEAD PLANNING STUDY
FLINT AVE

CONTRACT NO. HSR 06-0003
DRAWING NO. ST2137
SCALE AS SHOWN
SHEET NO. 9 OF 14

PRE45072 12/27/2013 9:10:28 AM c:\pwworking\hmm\external\pre45072\dms91106\FB-ST-2137-H.dgn

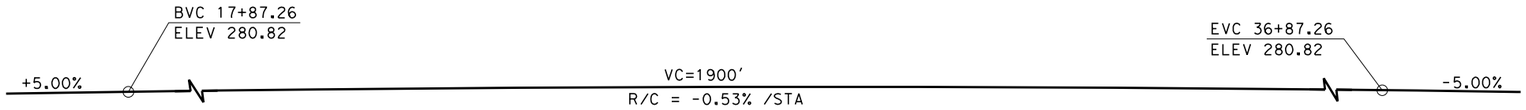

PROFILE GRADE
NO SCALE

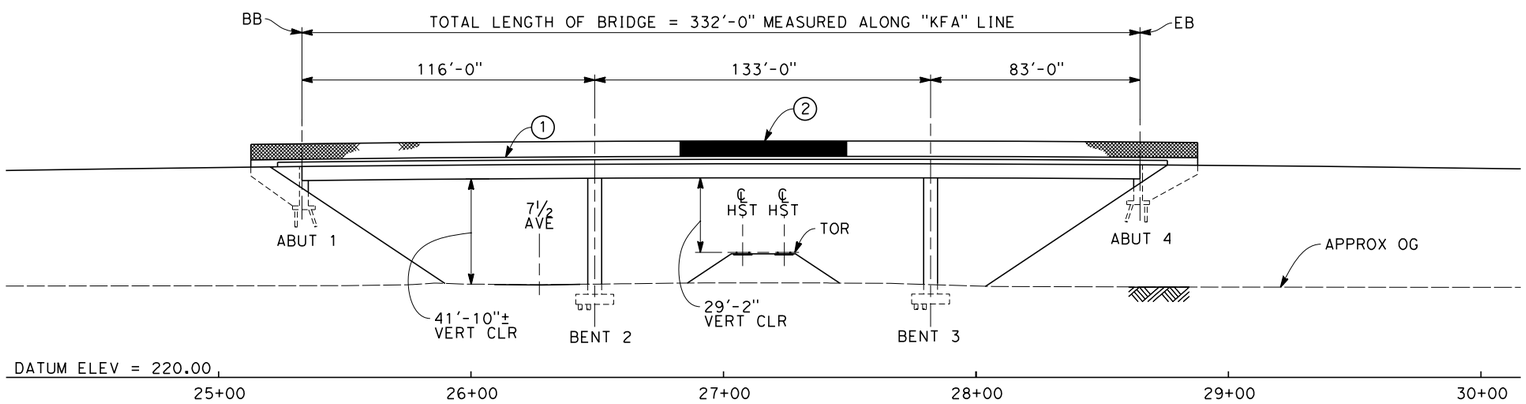

ELEVATION
SCALE: 1"=30'

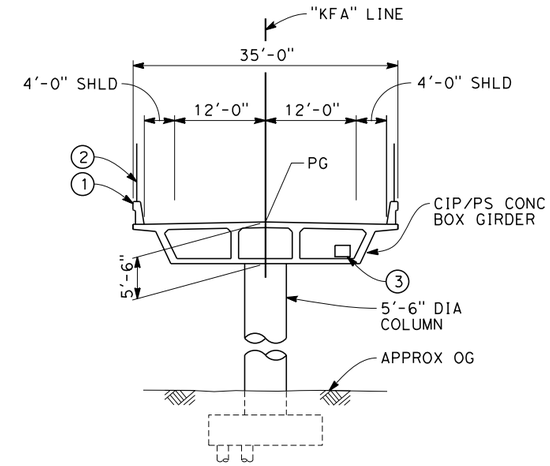

TYPICAL SECTION
SCALE: 1"=10'

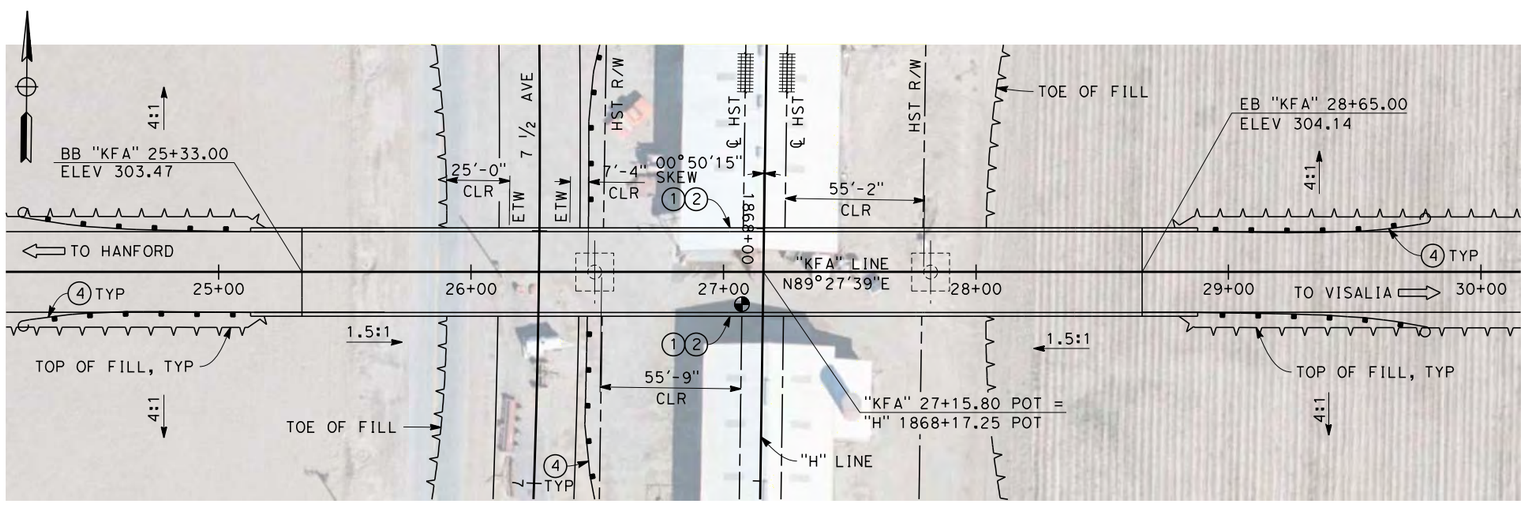

PLAN
SCALE: 1"=30'

NOTES:

1. ALL PILES NOT SHOWN.
2. FOR MINIMUM VERTICAL CLEARANCES, HORIZONTAL CURVE DATA, AND DETAILS NOT SHOWN, SEE ROADWAY PLANS.

LEGEND:

1. CONCRETE BARRIER WITH AR FENCE
2. AR FENCE WITH SOLID PLATE OVER HST
3. FUTURE UTILITY ENCASEMENT OPENING
4. MBGR

10 0 10 20 — 1"=10'

30 0 30 60 — 1"=30'

REV	DATE	BY	CHK	APP	DESCRIPTION

DESIGNED BY B. LUSCOMBE
DRAWN BY D. BARNHART
CHECKED BY M. ANDREWS
IN CHARGE R. COFFIN
DATE 12/31/13

RECORD SET 15% DESIGN SUBMISSION - NOT FOR CONSTRUCTION

URS | HMM | ARUP
CALIFORNIA HIGH-SPEED TRAIN

CALIFORNIA HIGH-SPEED RAIL AUTHORITY

CALIFORNIA HIGH-SPEED TRAIN PROJECT
FRESNO TO BAKERSFIELD
HANFORD SUBSECTION
ALIGNMENT H
OVERHEAD PLANNING STUDY
FARGO AVE

CONTRACT NO. HSR 06-0003
DRAWING NO. ST2139
SCALE AS SHOWN
SHEET NO. 10 OF 14

12/27/2013 4:17:22 PM c:\pwworking\hmm\external\pro39009\dms91106\FB-ST-2139-H.dgn
Clark

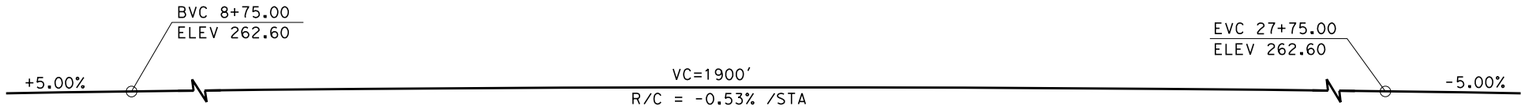

PROFILE GRADE
NO SCALE

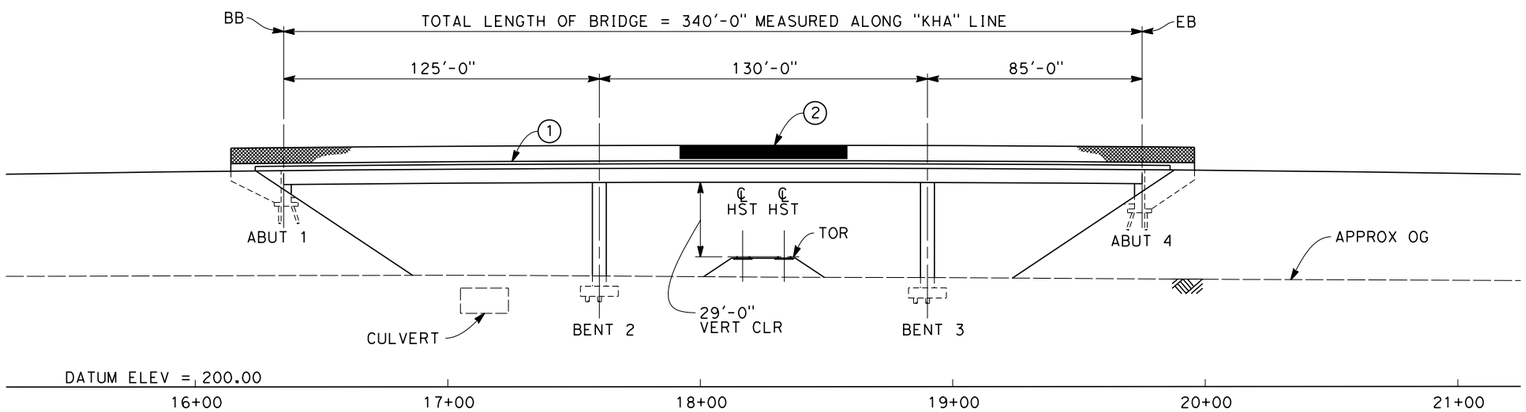

ELEVATION
SCALE: 1"=30'

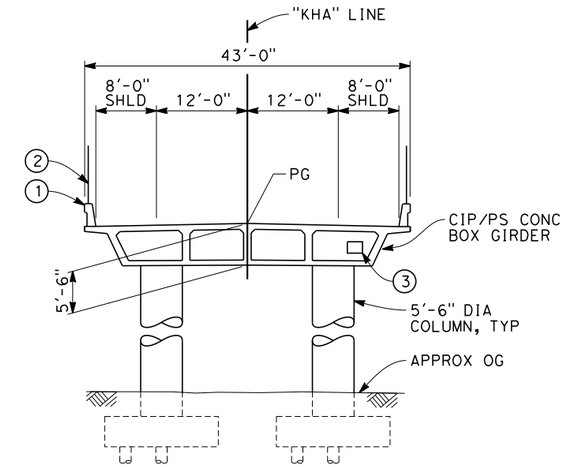

TYPICAL SECTION
SCALE: 1"=10'

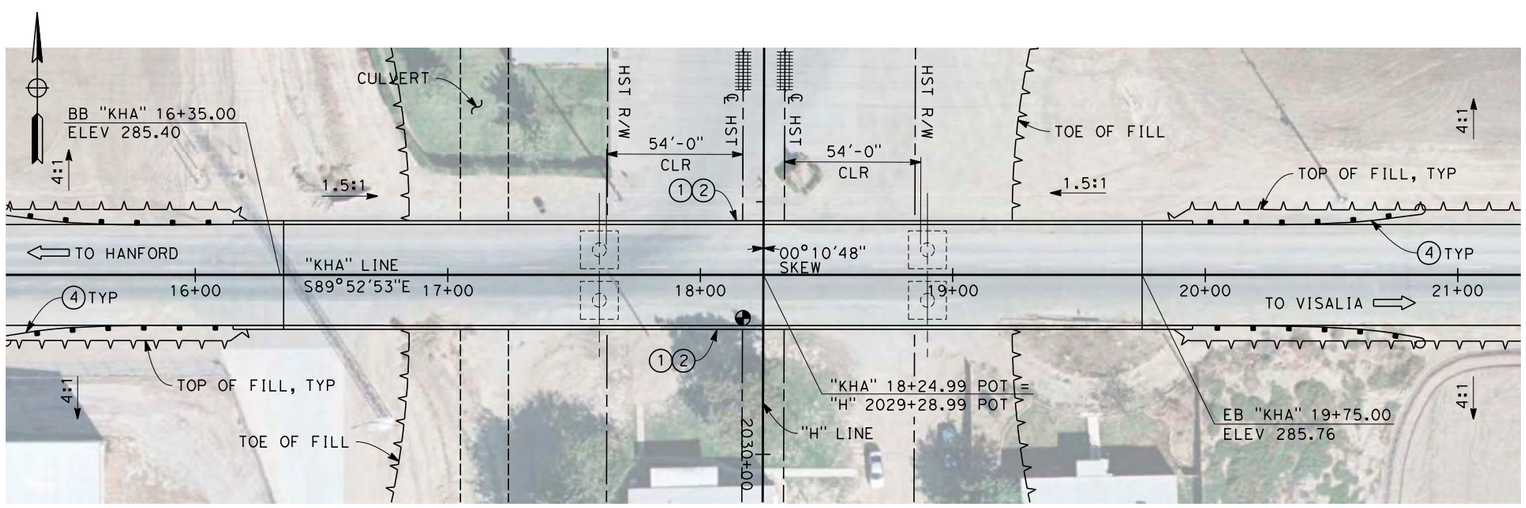

PLAN
SCALE: 1"=30'

NOTES:

1. ALL PILES NOT SHOWN
2. FOR MINIMUM VERTICAL CLEARANCES, HORIZONTAL CURVE DATA, AND DETAILS NOT SHOWN, SEE ROADWAY PLANS.

LEGEND:

1. CONCRETE BARRIER WITH AR FENCE
2. AR FENCE WITH SOLID PLATE OVER HST
3. FUTURE UTILITY ENCASEMENT OPENING
4. MBGR

10 0 10 20 — 1"=10'

30 0 30 60 — 1"=30'

REV	DATE	BY	CHK	APP	DESCRIPTION

DESIGNED BY B. LUSCOMBE
DRAWN BY D. BARNHART
CHECKED BY M. ANDREWS
IN CHARGE R. COFFIN
DATE 12/31/13

RECORD SET 15% DESIGN SUBMISSION - NOT FOR CONSTRUCTION

URS | HMM | ARUP
CALIFORNIA HIGH-SPEED TRAIN

CALIFORNIA HIGH-SPEED RAIL AUTHORITY

CALIFORNIA HIGH-SPEED TRAIN PROJECT
FRESNO TO BAKERSFIELD
HANFORD SUBSECTION
ALIGNMENT H
OVERHEAD PLANNING STUDY
HANFORD ARMONA RD

CONTRACT NO. HSR 06-0003
DRAWING NO. ST2143
SCALE AS SHOWN
SHEET NO. 11 OF 14

PRE45072 12/27/2013 9:58:02 AM c:\pwworking\hmm\external\pre45072\dms91106\FB-ST-2143-H.dgn

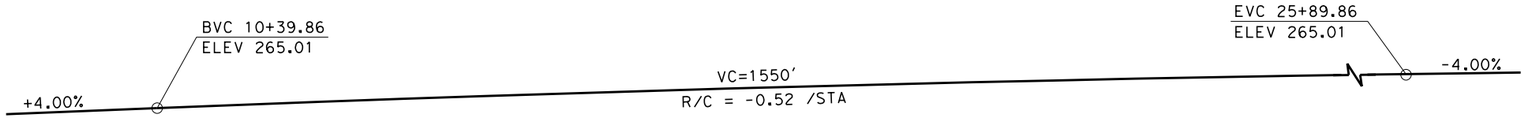

PROFILE GRADE
NO SCALE

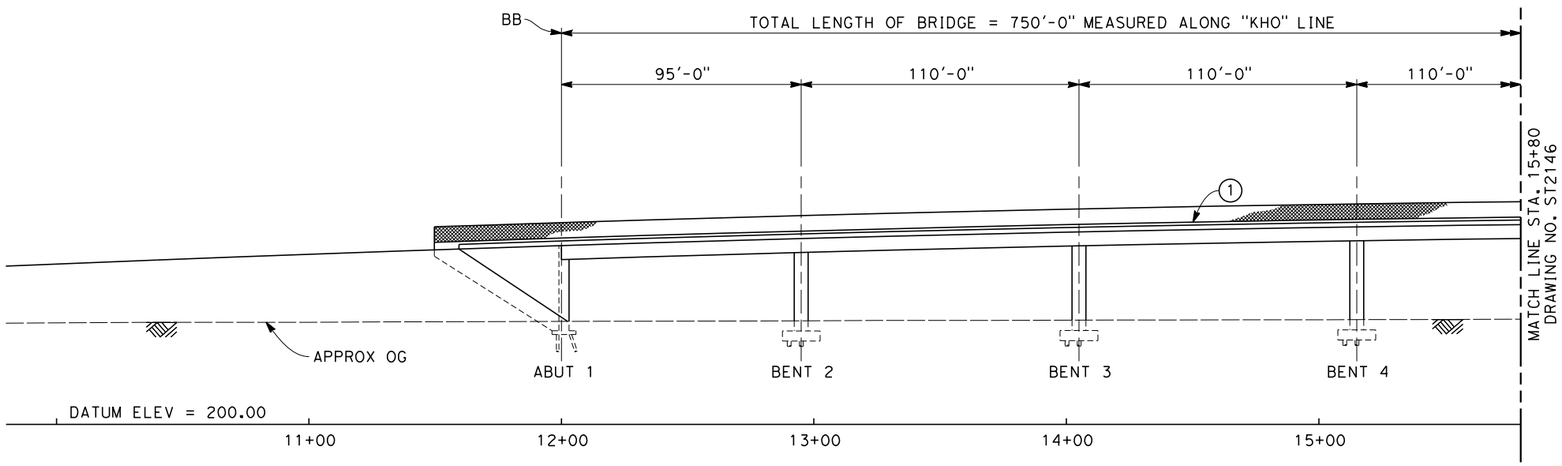

ELEVATION
SCALE: 1"=30'

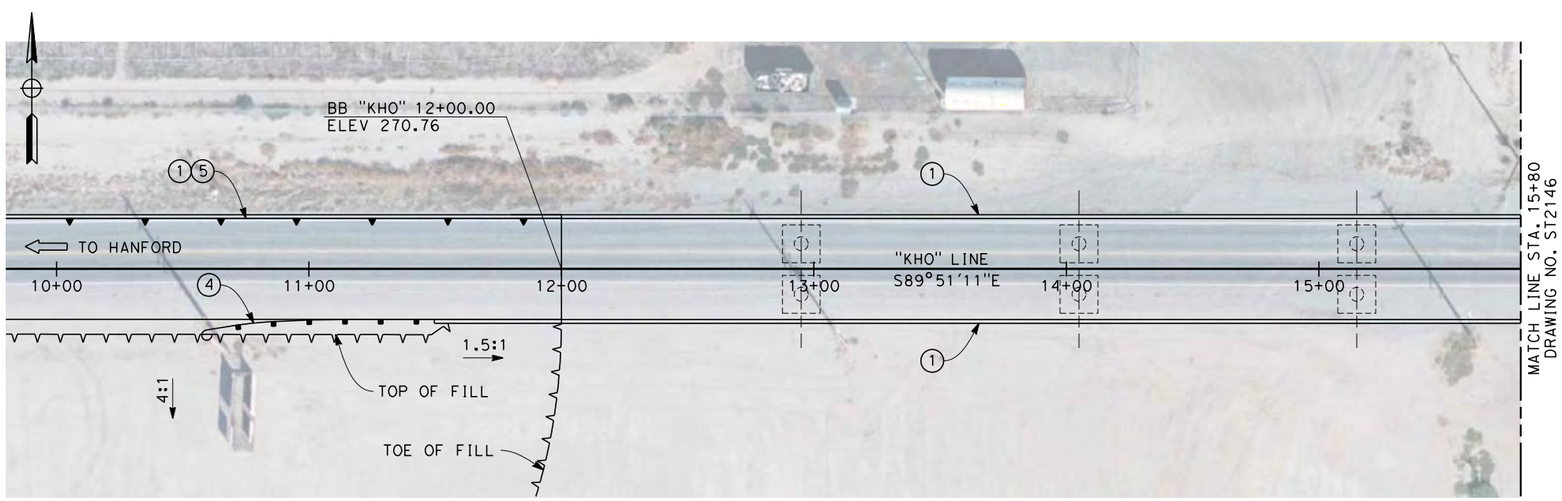

PLAN
SCALE: 1"=30'

NOTES:

1. ALL PILES NOT SHOWN
2. FOR MINIMUM VERTICAL CLEARANCES, HORIZONTAL CURVE DATA, AND DETAILS NOT SHOWN, SEE ROADWAY PLANS.

LEGEND:

1. CONCRETE BARRIER WITH AR FENCE
2. AR FENCE WITH SOLID PLATE OVER HST
3. FUTURE UTILITY ENCASEMENT OPENING
4. MBGR
5. RETAINING WALL

30 0 30 60
1"=30'

REV	DATE	BY	CHK	APP	DESCRIPTION

DESIGNED BY B. LUSCOMBE
DRAWN BY D. BARNHART
CHECKED BY M. ANDREWS
IN CHARGE R. COFFIN
DATE 12/31/13

RECORD SET 15% DESIGN SUBMISSION - NOT FOR CONSTRUCTION

URS | HMM | ARUP
CALIFORNIA HIGH-SPEED TRAIN

CALIFORNIA HIGH-SPEED RAIL AUTHORITY

CALIFORNIA HIGH-SPEED TRAIN PROJECT
FRESNO TO BAKERSFIELD
HANFORD SUBSECTION
ALIGNMENT H
OVERHEAD PLANNING STUDY
HOUSTON AVE

CONTRACT NO. HSR 06-0003
DRAWING NO. ST2145
SCALE AS SHOWN
SHEET NO. 12 OF 14

12/23/2013 2:02:16 PM c:\pwworking\hmm\external\bar50597\dms91106\FB-ST-2145-H.dgn
BAR50597

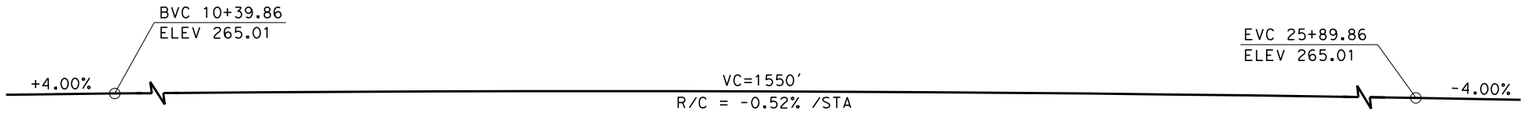

PROFILE GRADE
NO SCALE

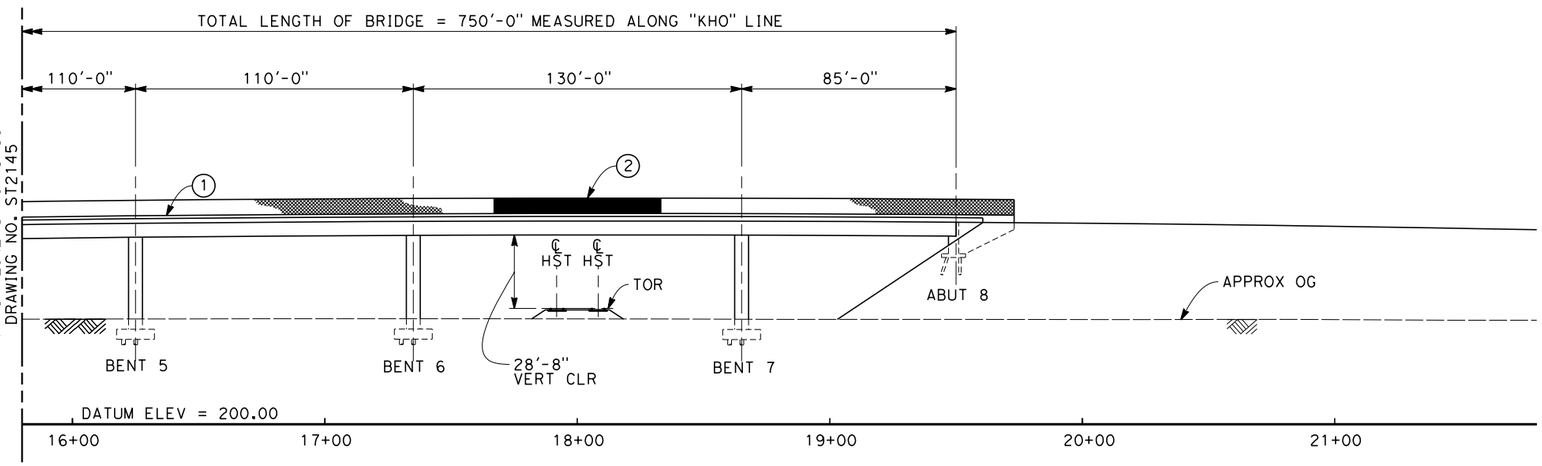

ELEVATION
SCALE: 1"=30'

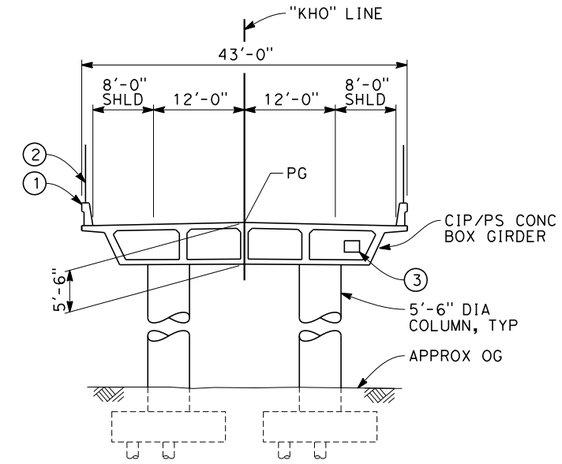

TYPICAL SECTION
SCALE: 1"=10'

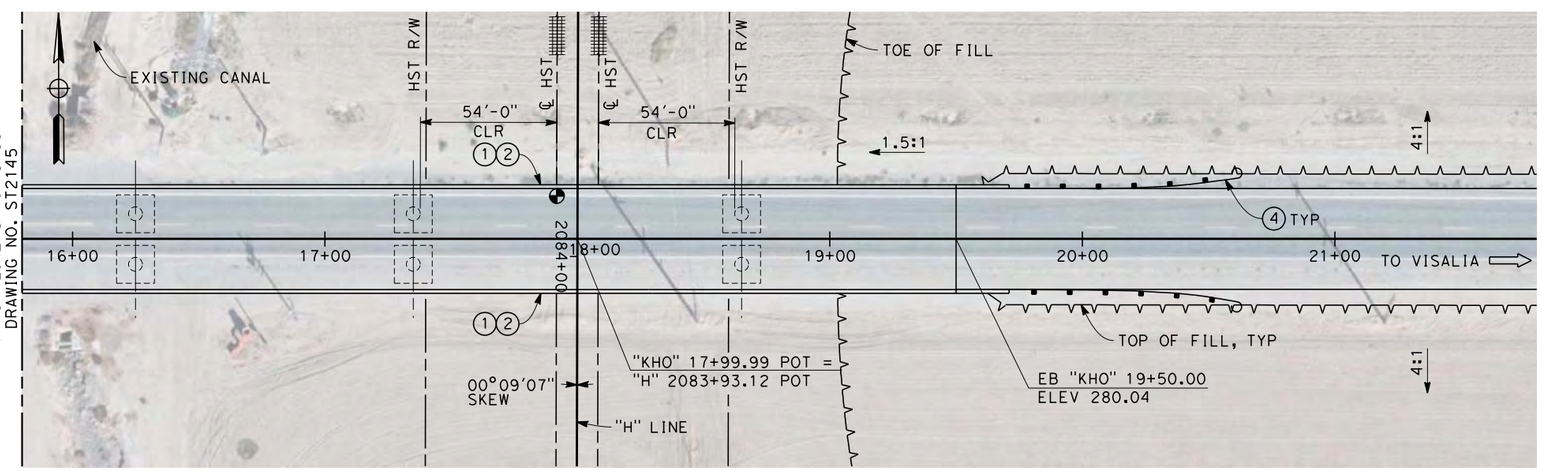

PLAN
SCALE: 1"=30'

NOTES:

1. ALL PILES NOT SHOWN
2. FOR MINIMUM VERTICAL CLEARANCES, HORIZONTAL CURVE DATA, AND DETAILS NOT SHOWN, SEE ROADWAY PLANS.

LEGEND:

1. CONCRETE BARRIER WITH AR FENCE
2. AR FENCE WITH SOLID PLATE OVER HST
3. FUTURE UTILITY ENCASEMENT OPENING
4. MBGR

10 0 10 20
1"=10'

30 0 30 60
1"=30'

REV	DATE	BY	CHK	APP	DESCRIPTION

DESIGNED BY B. LUSCOMBE
DRAWN BY D. BARNHART
CHECKED BY M. ANDREWS
IN CHARGE R. COFFIN
DATE 12/31/13

RECORD SET 15% DESIGN SUBMISSION - NOT FOR CONSTRUCTION

URS | HMM | ARUP
CALIFORNIA HIGH-SPEED TRAIN

CALIFORNIA HIGH-SPEED RAIL AUTHORITY

CALIFORNIA HIGH-SPEED TRAIN PROJECT
FRESNO TO BAKERSFIELD
HANFORD SUBSECTION
ALIGNMENT H
OVERHEAD PLANNING STUDY
HOUSTON AVE

CONTRACT NO. HSR 06-0003
DRAWING NO. ST2146
SCALE AS SHOWN
SHEET NO. 13 OF 14

12/27/2013 9:56:58 AM c:\pwworking\hmm\external\pre45072\dms91106\FB-ST-2146-H.dgn
PRE45072

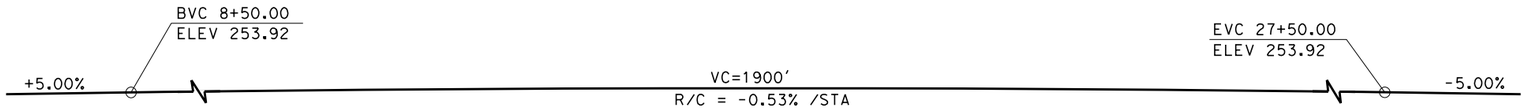

PROFILE GRADE
NO SCALE

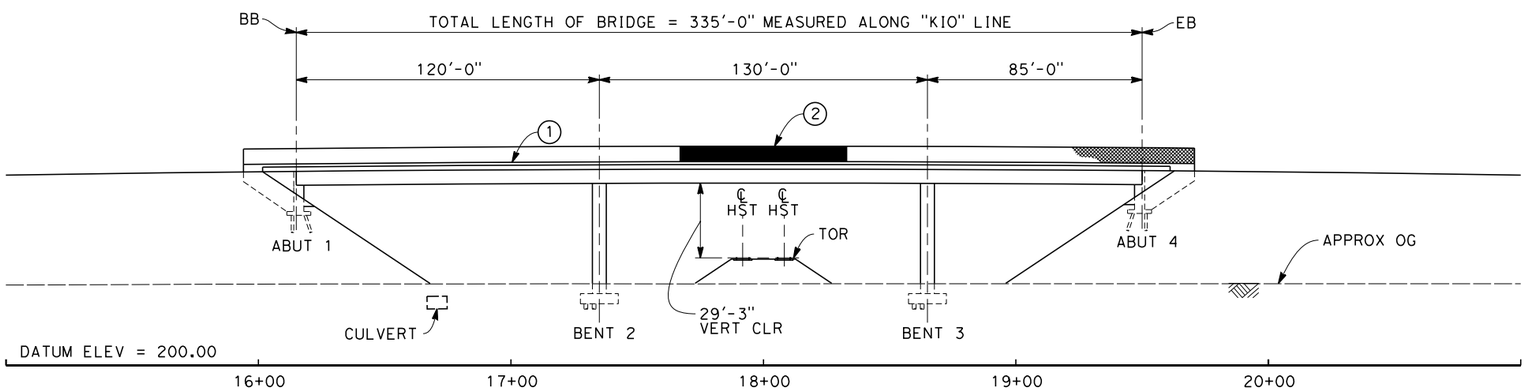

ELEVATION
SCALE: 1"=30'

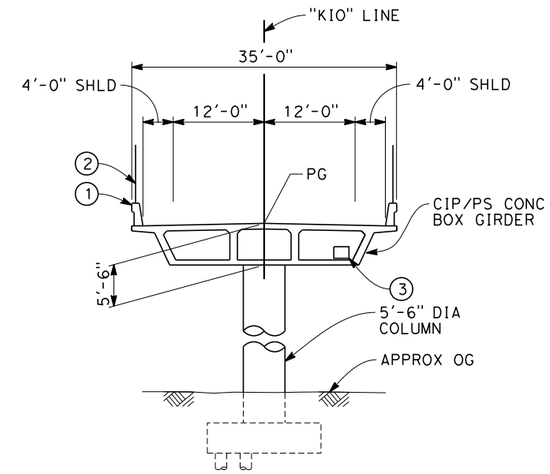

TYPICAL SECTION
SCALE: 1"=10'

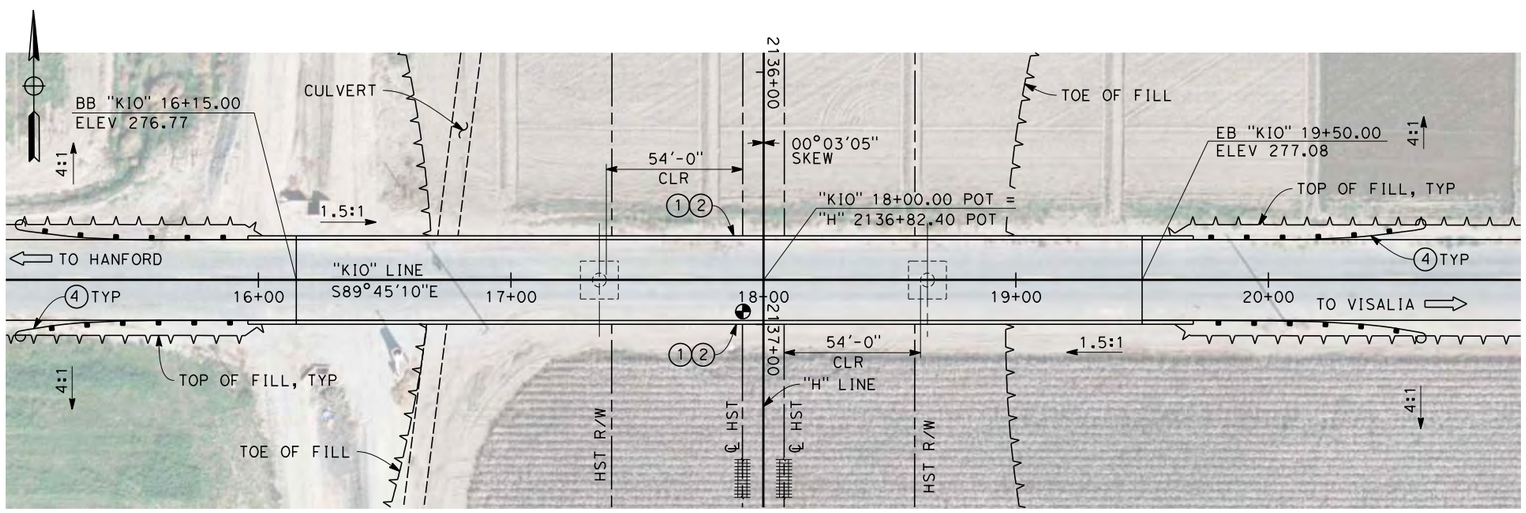

PLAN
SCALE: 1"=30'

NOTES:

1. ALL PILES NOT SHOWN
2. FOR MINIMUM VERTICAL CLEARANCES, HORIZONTAL CURVE DATA, AND DETAILS NOT SHOWN, SEE ROADWAY PLANS.

LEGEND:

1. CONCRETE BARRIER WITH AR FENCE
2. AR FENCE WITH SOLID PLATE OVER HST
3. FUTURE UTILITY ENCASEMENT OPENING
4. MBGR

10 0 10 20
1"=10'

10 0 30 60
1"=30'

REV	DATE	BY	CHK	APP	DESCRIPTION

DESIGNED BY B. LUSCOMBE
DRAWN BY D. BARNHART
CHECKED BY M. ANDREWS
IN CHARGE R. COFFIN
DATE 12/31/13

RECORD SET 15% DESIGN SUBMISSION - NOT FOR CONSTRUCTION

URS | HMM | ARUP
CALIFORNIA HIGH-SPEED TRAIN

CALIFORNIA HIGH-SPEED RAIL AUTHORITY

CALIFORNIA HIGH-SPEED TRAIN PROJECT
FRESNO TO BAKERSFIELD
HANFORD SUBSECTION
ALIGNMENT H
OVERHEAD PLANNING STUDY
IONA AVE

CONTRACT NO. HSR 06-0003
DRAWING NO. ST2147
SCALE AS SHOWN
SHEET NO. 14 OF 14

PRE45072 12/26/2013 3:16:49 PM c:\pwworking\hmm\external\pre45072\dms91106\FB-ST-2147-H.dgn

REV	DATE	BY	CHK	APP	DESCRIPTION

DESIGNED BY M. ANDREWS
DRAWN BY D. BARNHART
CHECKED BY E. MORAN
IN CHARGE R. COFFIN
DATE 12/31/13

RECORD SET 15% DESIGN SUBMISSION - NOT FOR CONSTRUCTION

URS | HMM | ARUP
CALIFORNIA HIGH-SPEED TRAIN

CALIFORNIA HIGH-SPEED RAIL AUTHORITY

CALIFORNIA HIGH-SPEED TRAIN PROJECT
FRESNO TO BAKERSFIELD
HANFORD WEST BYPASS SUBSECTION
ALIGNMENT HW
OVERHEAD PLANNING STUDY
KEY MAP

CONTRACT NO. HSR 06-0003
DRAWING NO. SB0055
SCALE AS SHOWN
SHEET NO. 1 OF 10

BAR59603 12/27/2013 10:38:55 AM CAHSRP-r1.tbl CHSR_PDF_half_black_200dpi.pwp

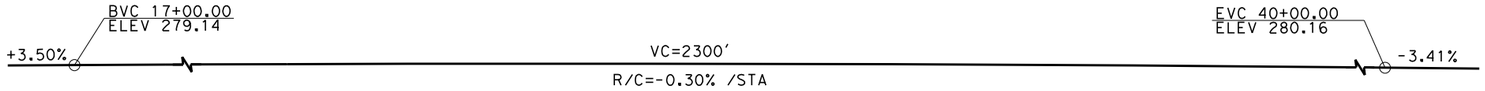

PROFILE GRADE
NO SCALE

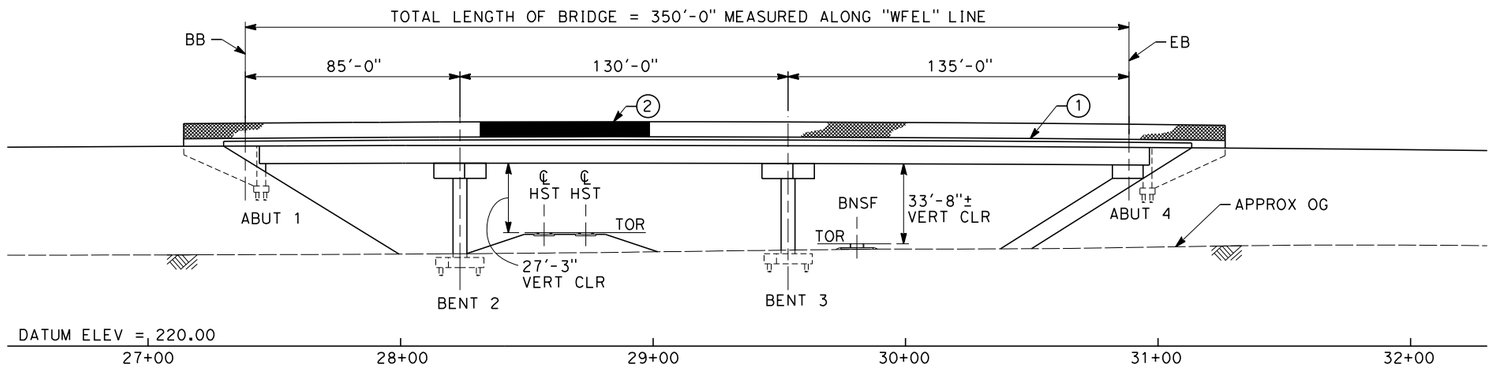

ELEVATION
SCALE: 1"=30'

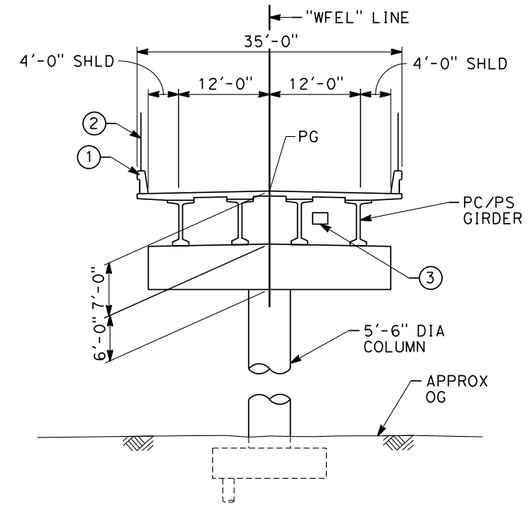

TYPICAL SECTION
SCALE: 1"=10'

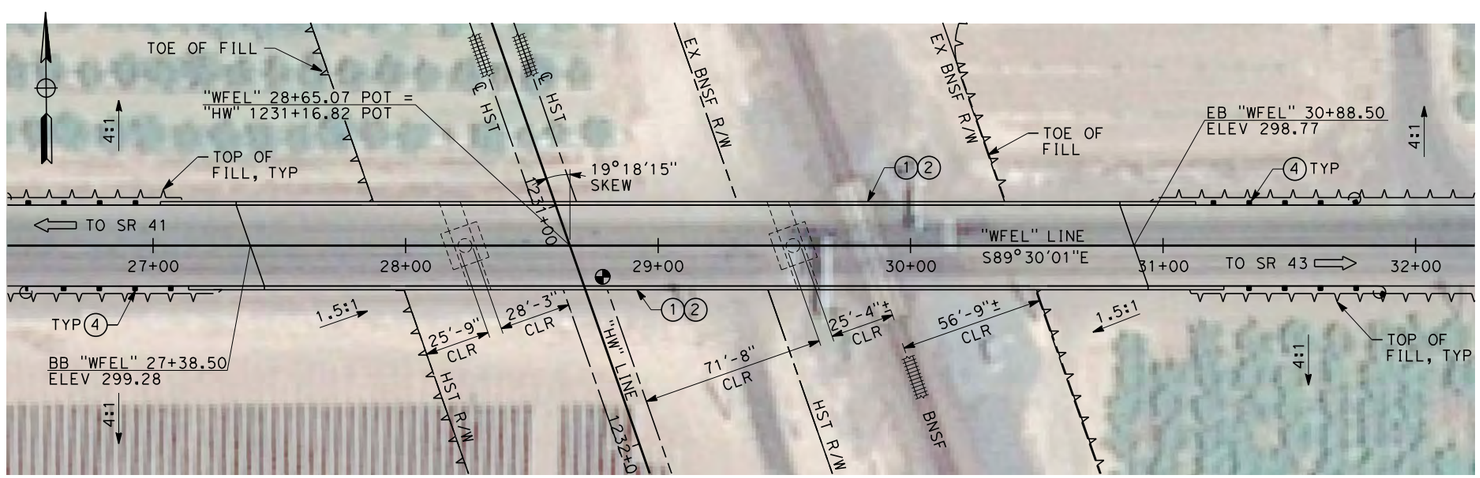

PLAN
SCALE: 1"=30'

NOTES:
1. ALL PILES NOT SHOWN
2. FOR MINIMUM VERTICAL CLEARANCES, HORIZONTAL CURVE DATA, AND DETAILS NOT SHOWN, SEE ROADWAY PLANS.

LEGEND:
1. CONCRETE BARRIER WITH AR FENCE
2. AR FENCE WITH SOLID PLATE OVER HST
3. FUTURE UTILITY ENCASEMENT OPENING
4. MBGR

10 0 10 20
1"=10'

30 0 30 60
1"=30'

REV	DATE	BY	CHK	APP	DESCRIPTION

DESIGNED BY M. ANDREWS
DRAWN BY P. BARBER
CHECKED BY E. MORAN
IN CHARGE R. COFFIN
DATE 12/31/13

RECORD SET 15% DESIGN SUBMISSION - NOT FOR CONSTRUCTION

URS | HMM | ARUP
CALIFORNIA HIGH-SPEED TRAIN

CALIFORNIA HIGH-SPEED RAIL AUTHORITY

CALIFORNIA HIGH-SPEED TRAIN PROJECT
FRESNO TO BAKERSFIELD
HANFORD WEST BYPASS SUBSECTION
ALIGNMENT HW
OVERHEAD PLANNING STUDY
E ELKHORN AVE

CONTRACT NO. HSR 06-0003
DRAWING NO. ST2300
SCALE AS SHOWN
SHEET NO. 2 OF 10

AND52110 12/18/2013 2:09:47 PM CAHSRP-r1.tbl CHSR_PDF_half_black.pltc:\pwworking\hmm\external\and52110\d0152519\FB-ST-2300-HW.dgn

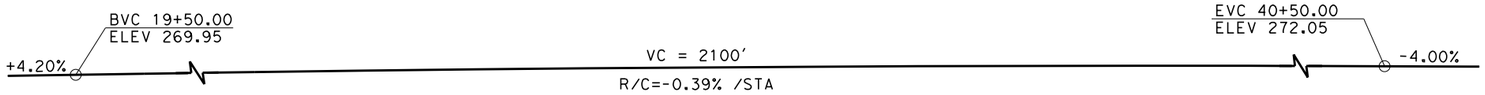

PROFILE GRADE
NO SCALE

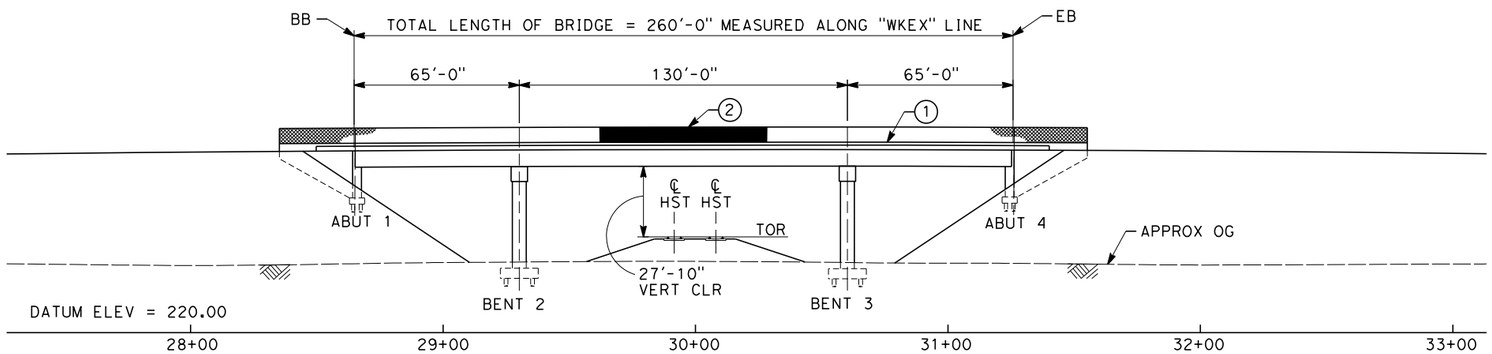

ELEVATION
SCALE: 1"=30'

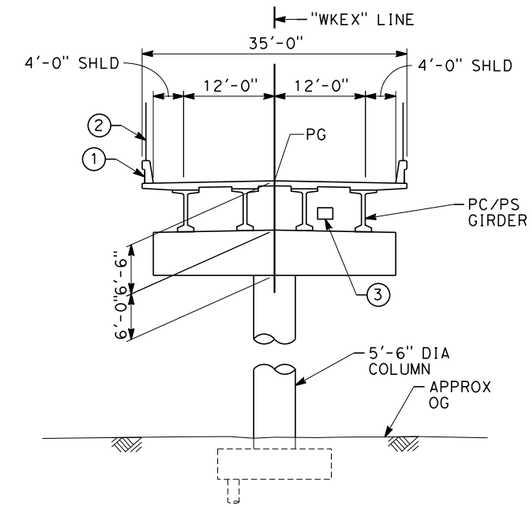

TYPICAL SECTION
SCALE: 1"=10'

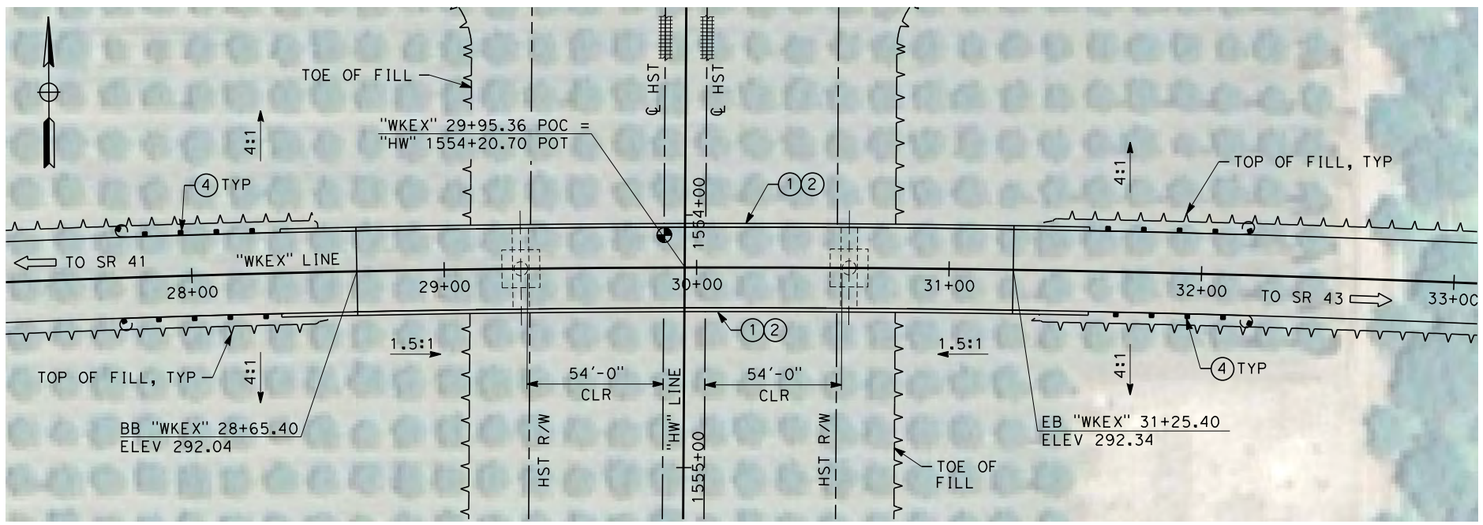

PLAN
SCALE: 1"=30'

NOTES:
1. ALL PILES NOT SHOWN
2. FOR MINIMUM VERTICAL CLEARANCES, HORIZONTAL CURVE DATA, AND DETAILS NOT SHOWN, SEE ROADWAY PLANS.

LEGEND:
1. CONCRETE BARRIER WITH AR FENCE
2. AR FENCE WITH SOLID PLATE OVER HST
3. FUTURE UTILITY ENCASEMENT OPENING
4. MBGR

10 0 10 20
1"=10'

30 0 30 60
1"=30'

REV	DATE	BY	CHK	APP	DESCRIPTION

DESIGNED BY M. ANDREWS
DRAWN BY P. BARBER
CHECKED BY E. MORAN
IN CHARGE R. COFFIN
DATE 12/31/13

RECORD SET 15% DESIGN SUBMISSION - NOT FOR CONSTRUCTION

URS | HMM | ARUP
CALIFORNIA HIGH-SPEED TRAIN

CALIFORNIA HIGH-SPEED RAIL AUTHORITY

CALIFORNIA HIGH-SPEED TRAIN PROJECT
FRESNO TO BAKERSFIELD
HANFORD WEST BYPASS SUBSECTION
ALIGNMENT HW
OVERHEAD PLANNING STUDY
EXCELSIOR AVE

CONTRACT NO. HSR 06-0003
DRAWING NO. ST2301
SCALE AS SHOWN
SHEET NO. 3 OF 10

AND52110 12/18/2013 2:18:41 PM CAHSRP-r1.tbl CHSR_PDF_half_black.pltc:\pwworking\hmm\external\and52110\d0152519\FB-ST-2301-HW.dgn

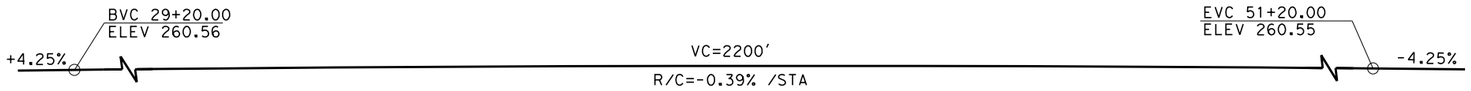

PROFILE GRADE
NO SCALE

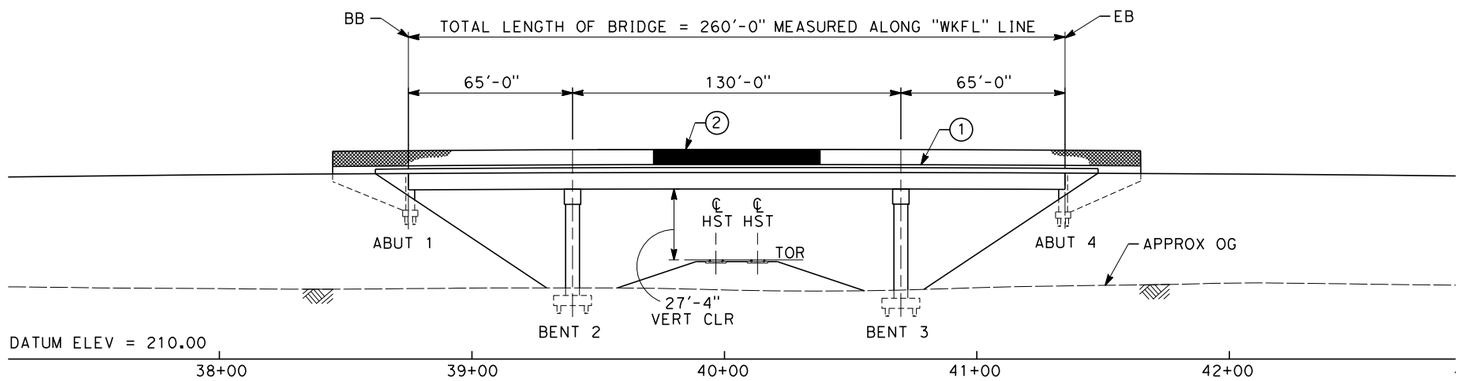

ELEVATION
SCALE: 1"=30'

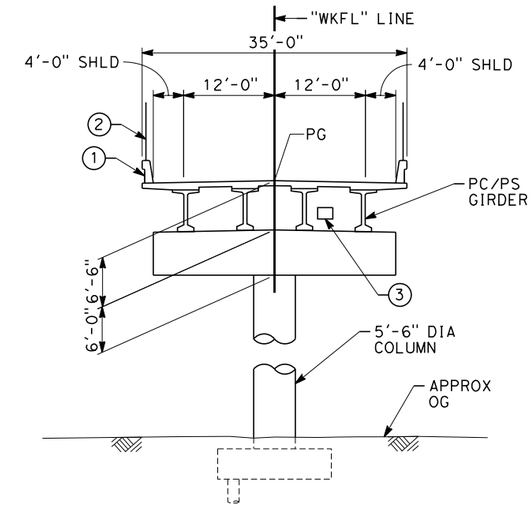

TYPICAL SECTION
SCALE: 1"=10'

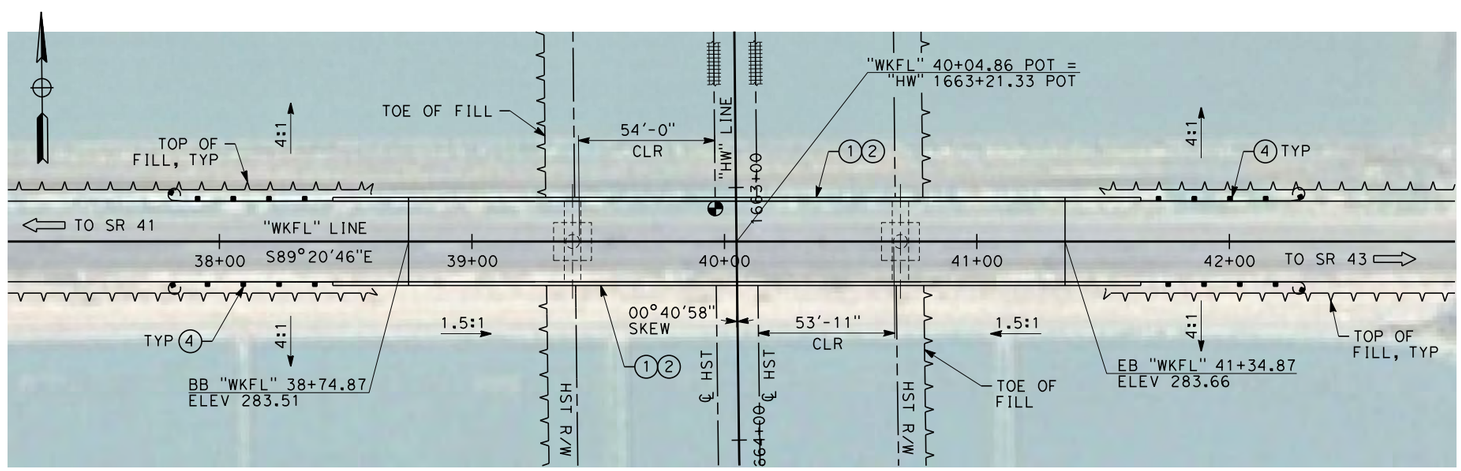

PLAN
SCALE: 1"=30'

NOTES:
1. ALL PILES NOT SHOWN
2. FOR MINIMUM VERTICAL CLEARANCES, HORIZONTAL CURVE DATA, AND DETAILS NOT SHOWN, SEE ROADWAY PLANS.

LEGEND:
1. CONCRETE BARRIER WITH AR FENCE
2. AR FENCE WITH SOLID PLATE OVER HST
3. FUTURE UTILITY ENCASEMENT OPENING
4. MBGR

10 0 10 20
1"=10'

30 0 30 60
1"=30'

REV	DATE	BY	CHK	APP	DESCRIPTION

DESIGNED BY M. ANDREWS
DRAWN BY P. BARBER
CHECKED BY E. MORAN
IN CHARGE R. COFFIN
DATE 12/31/13

RECORD SET 15% DESIGN SUBMISSION - NOT FOR CONSTRUCTION

URS | HMM | ARUP
CALIFORNIA HIGH-SPEED TRAIN

CALIFORNIA HIGH-SPEED RAIL AUTHORITY

CALIFORNIA HIGH-SPEED TRAIN PROJECT
FRESNO TO BAKERSFIELD
HANFORD WEST BYPASS SUBSECTION
ALIGNMENT HW
OVERHEAD PLANNING STUDY
FLINT AVE

CONTRACT NO. HSR 06-0003
DRAWING NO. ST2302
SCALE AS SHOWN
SHEET NO. 4 OF 10

AND52110 12/18/2013 2:22:51 PM CAHSRP-r1.tbl CHSR_PDF_half_black.pltc:\pwworking\hmm\external\and52110\d0152519\FB-ST-2302-HW.dgn

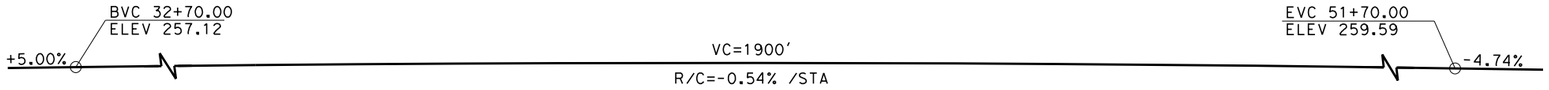

PROFILE GRADE
NO SCALE

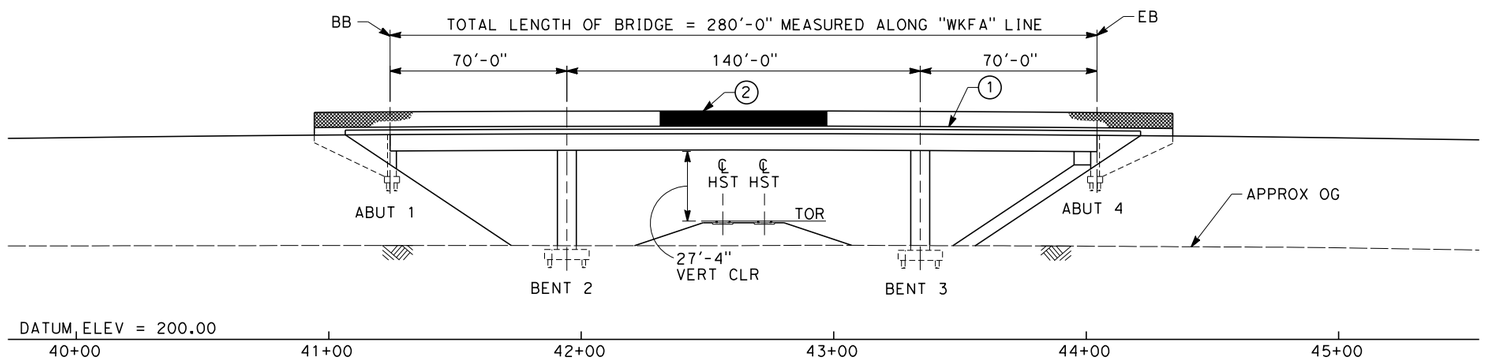

ELEVATION
SCALE: 1"=30'

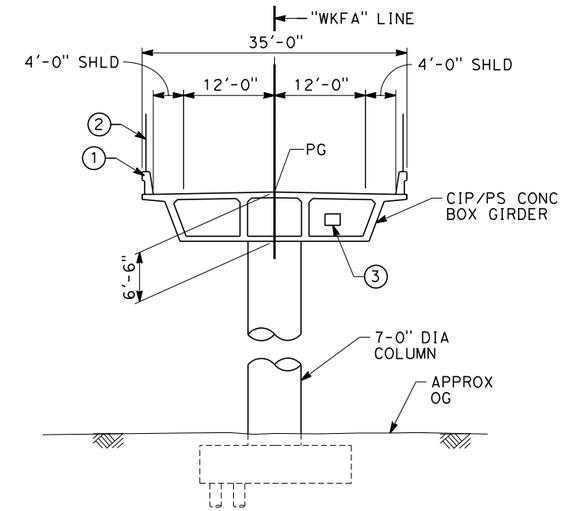

TYPICAL SECTION
SCALE: 1"=10'

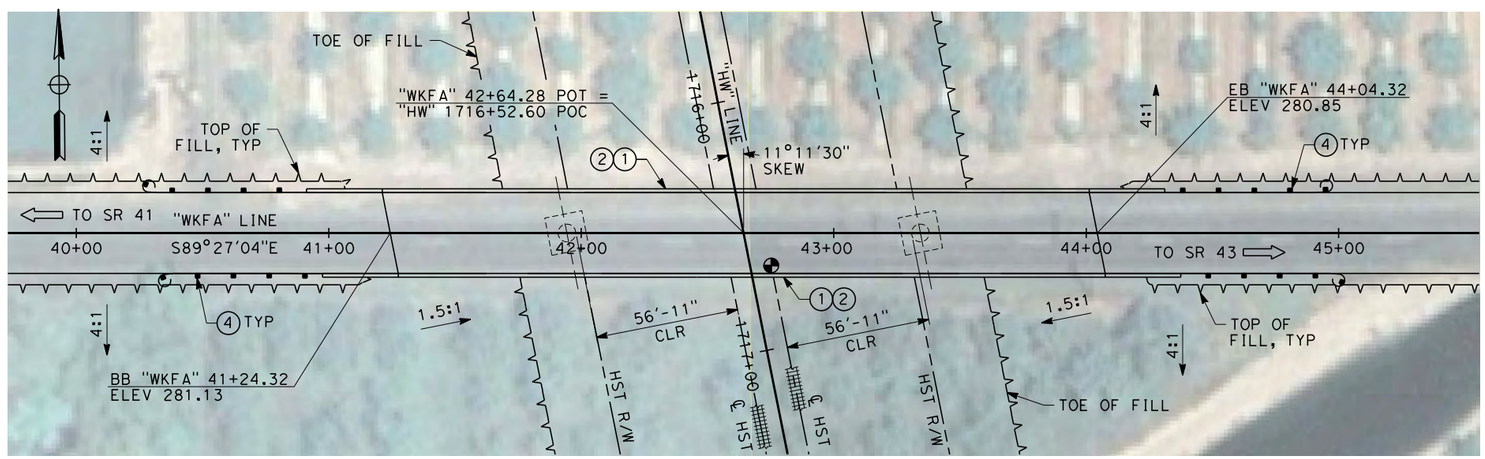

PLAN
SCALE: 1"=30'

NOTES:
1. ALL PILES NOT SHOWN
2. FOR MINIMUM VERTICAL CLEARANCES, HORIZONTAL CURVE DATA, AND DETAILS NOT SHOWN, SEE ROADWAY PLANS.

LEGEND:
1. CONCRETE BARRIER WITH AR FENCE
2. AR FENCE WITH SOLID PLATE OVER HST
3. FUTURE UTILITY ENCASEMENT OPENING
4. MBGR

10 0 10 20 — 1"=10'

30 0 30 60 — 1"=30'

REV	DATE	BY	CHK	APP	DESCRIPTION

DESIGNED BY M. ANDREWS
DRAWN BY P. BARBER
CHECKED BY E. MORAN
IN CHARGE R. COFFIN
DATE 12/31/13

RECORD SET 15% DESIGN SUBMISSION - NOT FOR CONSTRUCTION

URS | HMM | ARUP
CALIFORNIA HIGH-SPEED TRAIN

CALIFORNIA HIGH-SPEED RAIL AUTHORITY

CALIFORNIA HIGH-SPEED TRAIN PROJECT
FRESNO TO BAKERSFIELD
HANFORD WEST BYPASS SUBSECTION
ALIGNMENT HW
OVERHEAD PLANNING STUDY
FARGO AVE

CONTRACT NO. HSR 06-0003
DRAWING NO. ST2303
SCALE AS SHOWN
SHEET NO. 5 OF 10

AND52110 12/18/2013 2:29:07 PM CAHSRP-r1.tbl CHSR_PDF_half_black.pltc:\pwworking\hmm\external\and52110\d0152519\FB-ST-2303-HW.dgn

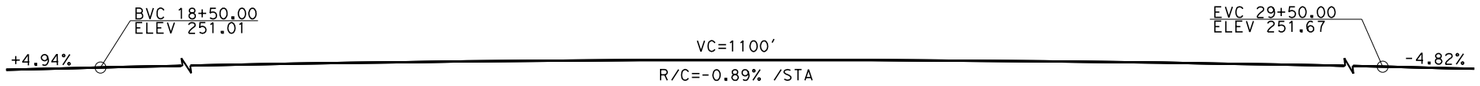

PROFILE GRADE
NO SCALE

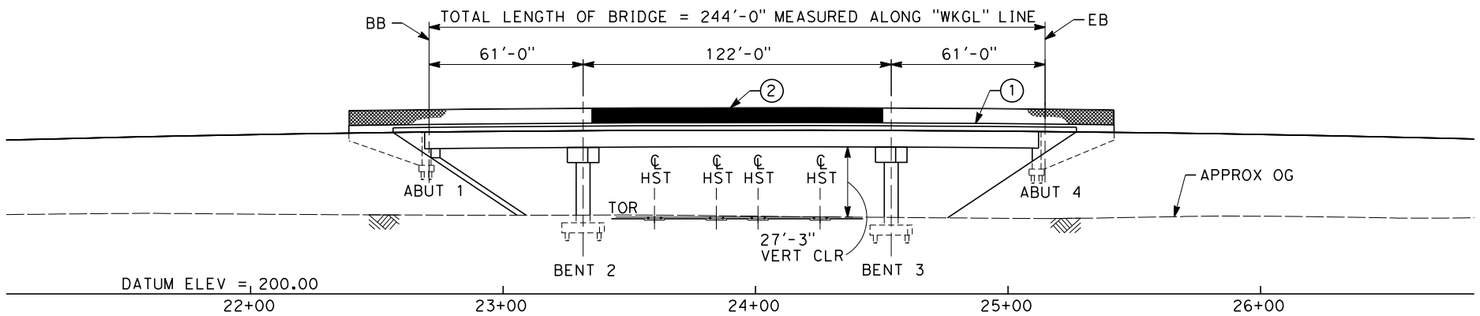

ELEVATION
SCALE: 1"=30'

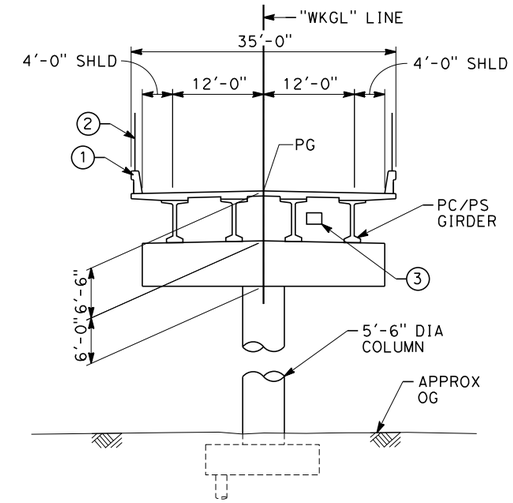

TYPICAL SECTION
SCALE: 1"=10'

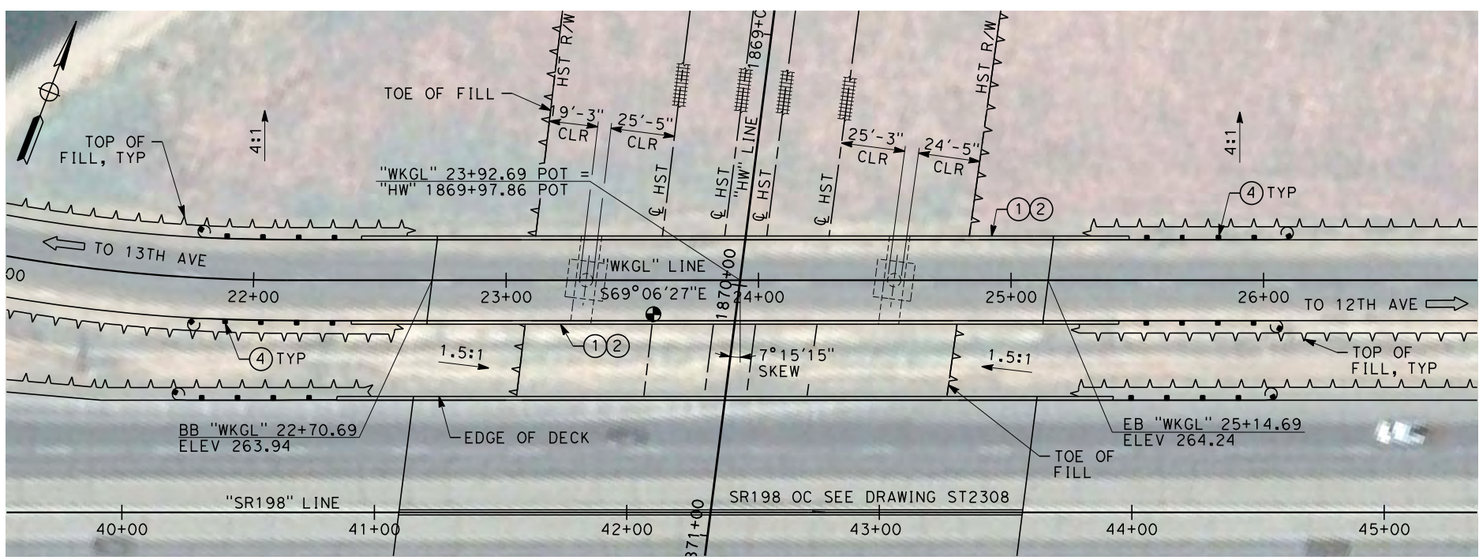

PLAN
SCALE: 1"=30'

NOTES:

1. ALL PILES NOT SHOWN
2. FOR MINIMUM VERTICAL CLEARANCES, HORIZONTAL CURVE DATA, AND DETAILS NOT SHOWN, SEE ROADWAY PLANS.

LEGEND:

1. CONCRETE BARRIER WITH AR FENCE
2. AR FENCE WITH SOLID PLATE OVER HST
3. FUTURE UTILITY ENCASEMENT OPENING
4. MBGR

10 0 10 20 — 1"=10'

30 0 30 60 — 1"=30'

REV	DATE	BY	CHK	APP	DESCRIPTION

DESIGNED BY M. ANDREWS
DRAWN BY P. BARBER
CHECKED BY E. MORAN
IN CHARGE R. COFFIN
DATE 12/31/13

RECORD SET 15% DESIGN SUBMISSION - NOT FOR CONSTRUCTION

URS | HMM | ARUP
CALIFORNIA HIGH-SPEED TRAIN

CALIFORNIA HIGH-SPEED RAIL AUTHORITY

CALIFORNIA HIGH-SPEED TRAIN PROJECT
FRESNO TO BAKERSFIELD
HANFORD WEST BYPASS SUBSECTION
ALIGNMENT HW
OVERHEAD PLANNING STUDY
GLENDALE AVE

CONTRACT NO. HSR 06-0003
DRAWING NO. ST2306
SCALE AS SHOWN
SHEET NO. 6 OF 10

AND52110 12/18/2013 2:45:17 PM CAHSRP-r1.tbl CHSR_PDF_half_black.pltc:\pwworking\hmm\external\and52110\d0152519\FB-ST-2306-HW.dgn

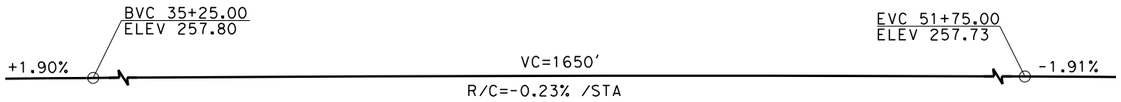

PROFILE GRADE

NO SCALE

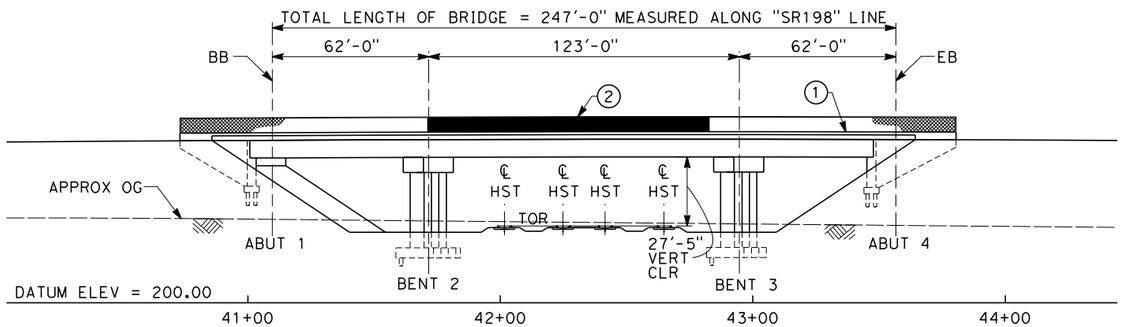

ELEVATION

SCALE: 1"=30'

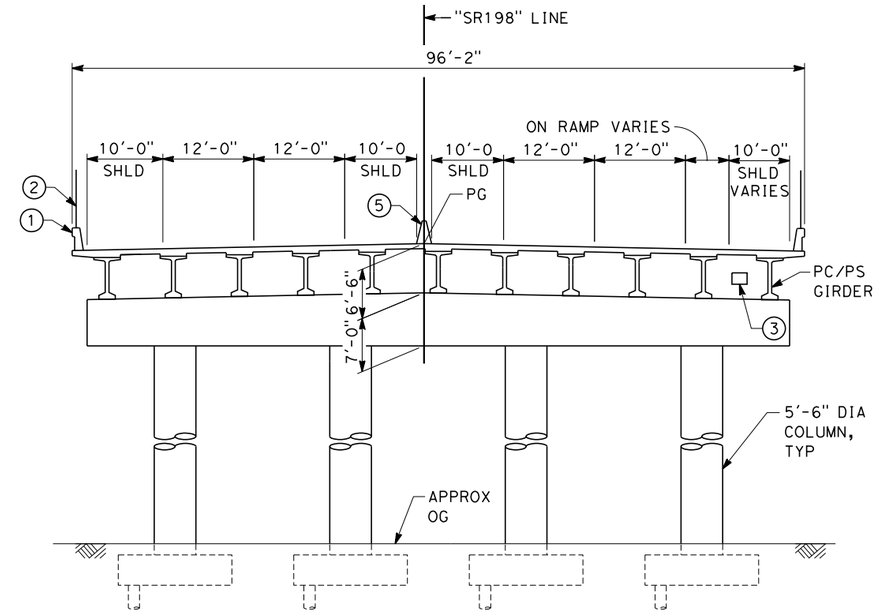

TYPICAL SECTION

SCALE: 1"=10'

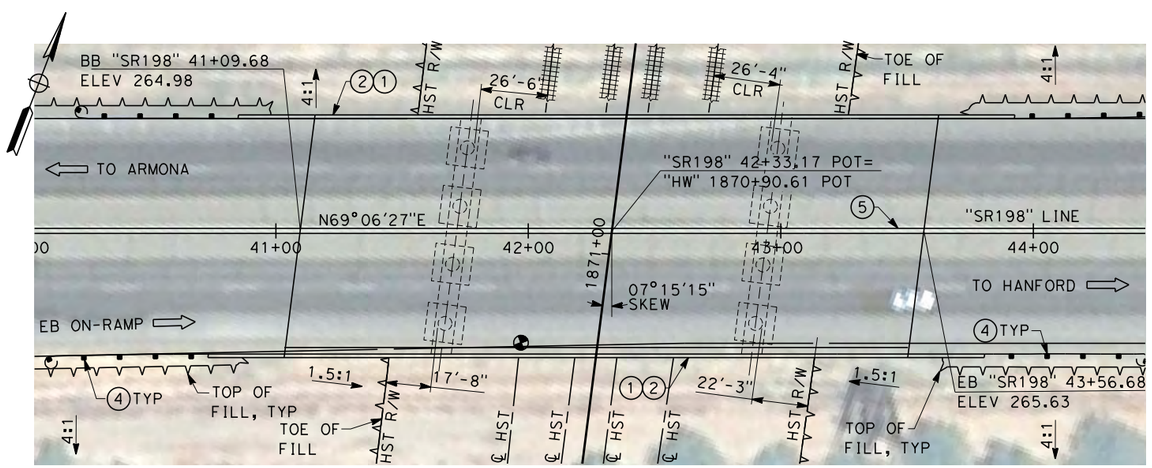

PLAN

SCALE: 1"=30'

NOTES:

1. ALL PILES NOT SHOWN
2. FOR MINIMUM VERTICAL CLEARANCES, HORIZONTAL CURVE DATA, AND DETAILS NOT SHOWN, SEE ROADWAY PLANS.

LEGEND:

1. CONCRETE BARRIER WITH AR FENCE
2. AR FENCE WITH SOLID PLATE OVER HST
3. FUTURE UTILITY ENCASEMENT OPENING
4. MBGR
5. CONCRETE BARRIER (TYPE 60)

10 0 10 20
1"=10'

30 0 30 60
1"=30'

REV	DATE	BY	CHK	APP	DESCRIPTION

DESIGNED BY M. ANDREWS
DRAWN BY P. BARBER
CHECKED BY E. MORAN
IN CHARGE R. COFFIN
DATE 12/31/13

RECORD SET 15% DESIGN SUBMISSION - NOT FOR CONSTRUCTION

URS | HMM | ARUP
CALIFORNIA HIGH-SPEED TRAIN

CALIFORNIA HIGH-SPEED RAIL AUTHORITY

CALIFORNIA HIGH-SPEED TRAIN PROJECT
FRESNO TO BAKERSFIELD
HANFORD WEST BYPASS SUBSECTION
ALIGNMENT HW
OVERHEAD PLANNING STUDY
STATE ROUTE 198

CONTRACT NO. HSR 06-0003
DRAWING NO. ST2308
SCALE AS SHOWN
SHEET NO. 7 OF 10

AND52110 12/18/2013 1:25:43 PM CAHSRP-r1.tbl CHSR_PDF_half_black.pltc:\pwworking\hmm\external\and52110\d0152519\FB-ST-2308-HW.dgn

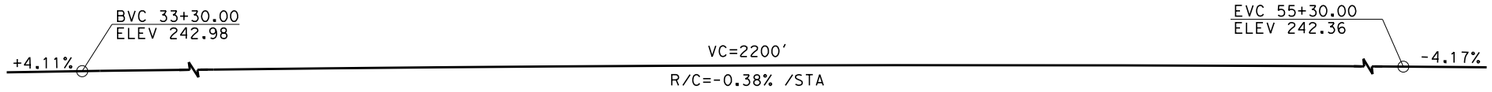

PROFILE GRADE
NO SCALE

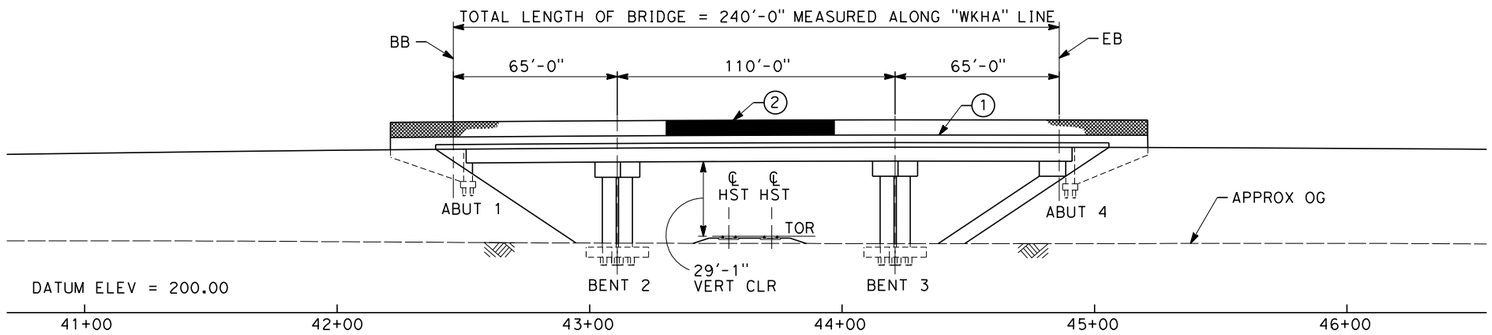

ELEVATION
SCALE: 1"=30'

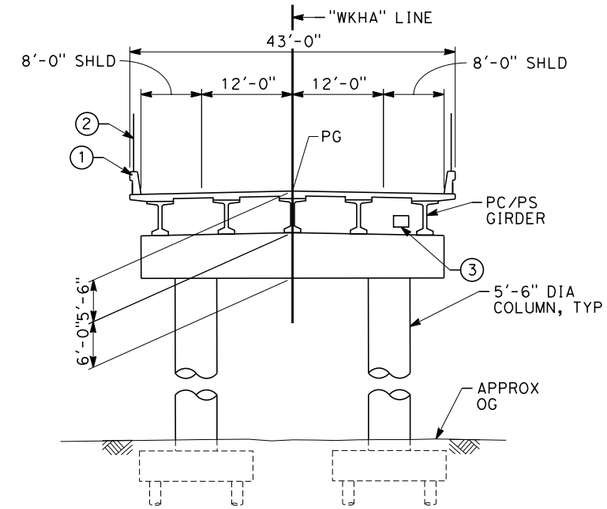

TYPICAL SECTION
SCALE: 1"=10'

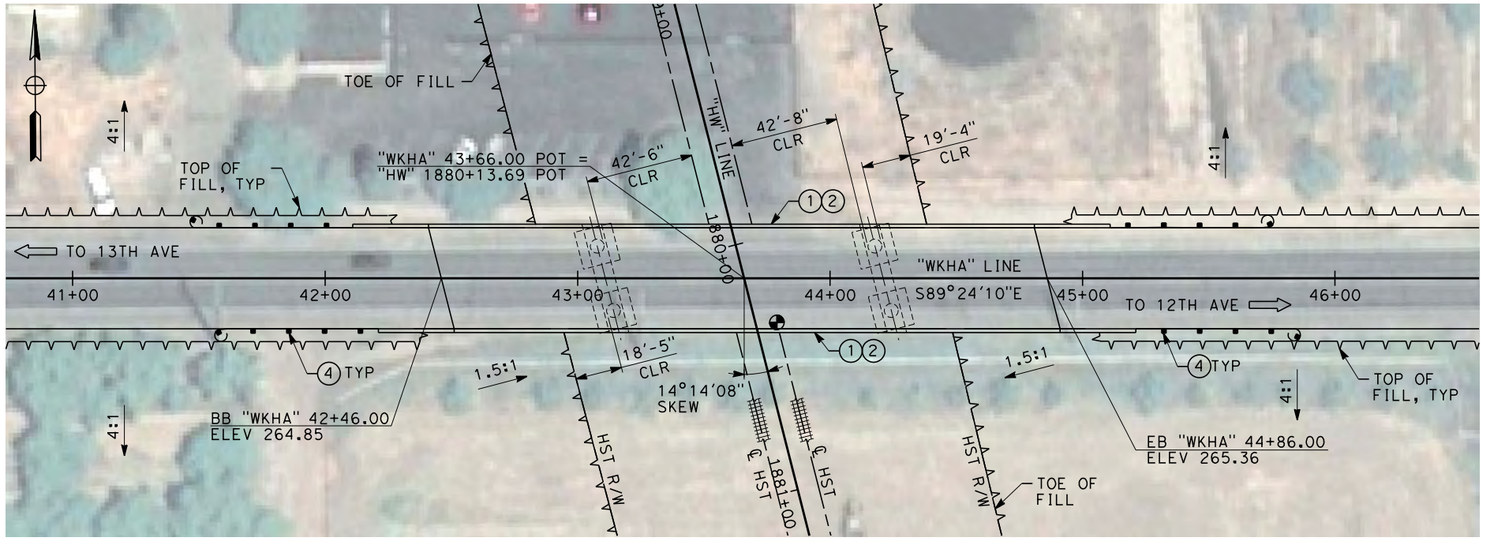

PLAN
SCALE: 1"=30'

NOTES:
1. ALL PILES NOT SHOWN
2. FOR MINIMUM VERTICAL CLEARANCES, HORIZONTAL CURVE DATA, AND DETAILS NOT SHOWN, SEE ROADWAY PLANS.

LEGEND:
1. CONCRETE BARRIER WITH AR FENCE
2. AR FENCE WITH SOLID PLATE OVER HST
3. FUTURE UTILITY ENCASEMENT OPENING
4. MBGR

10 0 10 20 — 1"=10'

30 0 30 60 — 1"=30'

REV	DATE	BY	CHK	APP	DESCRIPTION

DESIGNED BY M. ANDREWS
DRAWN BY P. BARBER
CHECKED BY E. MORAN
IN CHARGE R. COFFIN
DATE 12/31/13

RECORD SET 15% DESIGN SUBMISSION - NOT FOR CONSTRUCTION

URS | HMM | ARUP
CALIFORNIA HIGH-SPEED TRAIN

CALIFORNIA HIGH-SPEED RAIL AUTHORITY

CALIFORNIA HIGH-SPEED TRAIN PROJECT
FRESNO TO BAKERSFIELD
HANFORD WEST BYPASS SUBSECTION
ALIGNMENT HW
OVERHEAD PLANNING STUDY
HANFORD ARMONA RD

CONTRACT NO. HSR 06-0003
DRAWING NO. ST2310
SCALE AS SHOWN
SHEET NO. 8 OF 10

AND52110 12/18/2013 1:37:32 PM CAHSRP-r1.tbl CHSR_PDF_half_black.pltc:\pwworking\hmm\external\and52110\d0152519\FB-ST-2310-HW.dgn

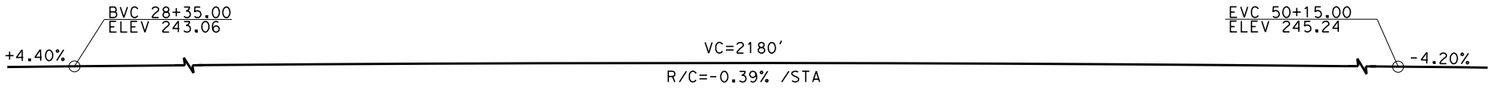

PROFILE GRADE
NO SCALE

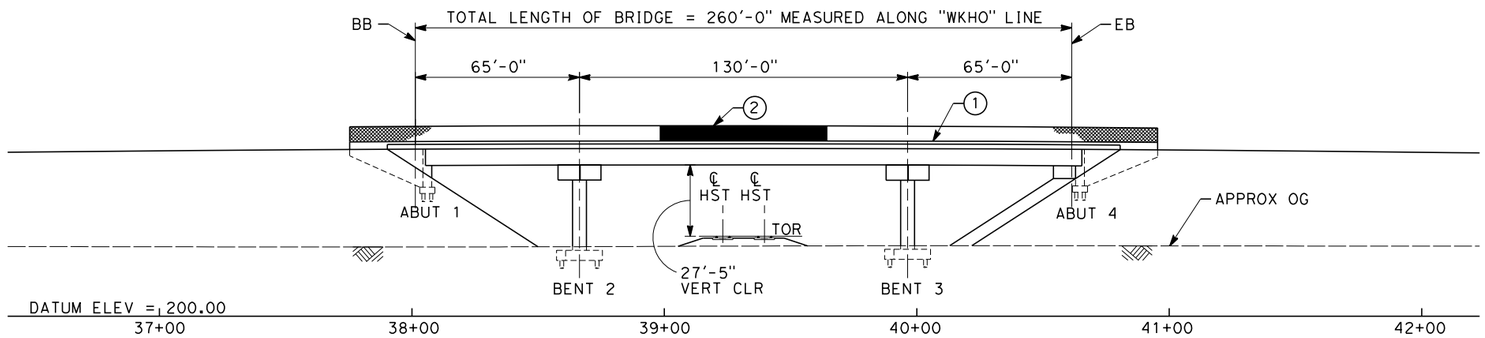

ELEVATION
SCALE: 1"=30'

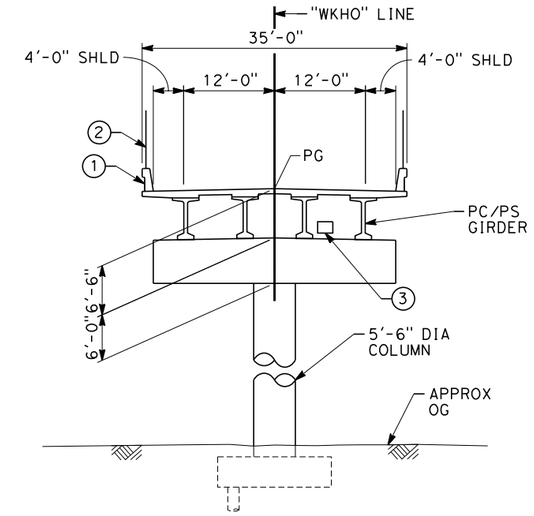

TYPICAL SECTION
SCALE: 1"=10'

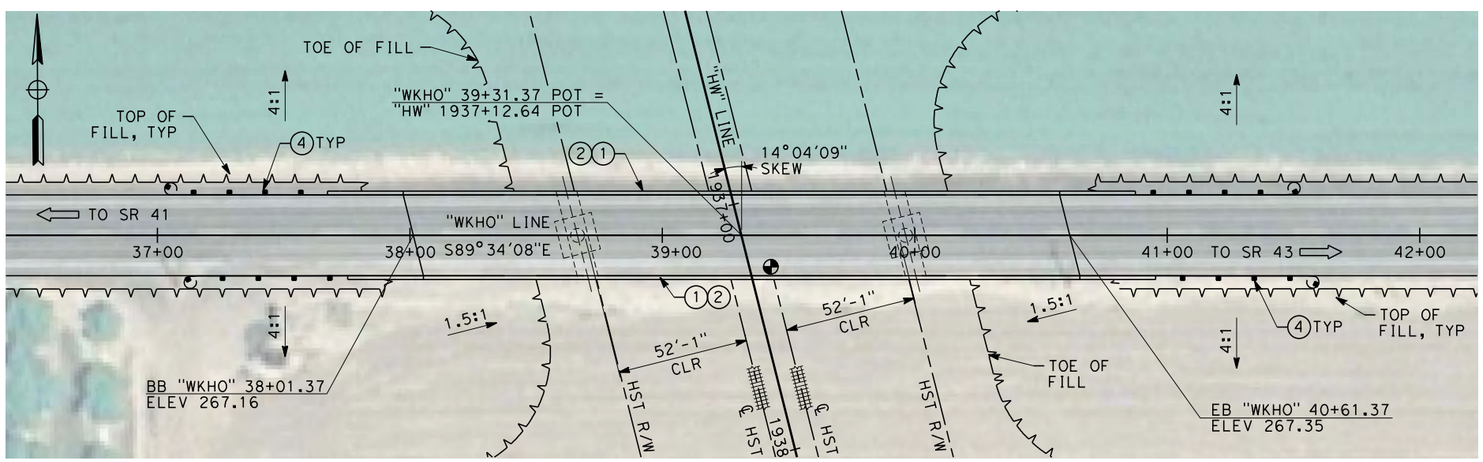

PLAN
SCALE: 1"=30'

NOTES:
1. ALL PILES NOT SHOWN
2. FOR MINIMUM VERTICAL CLEARANCES, HORIZONTAL CURVE DATA, AND DETAILS NOT SHOWN, SEE ROADWAY PLANS.

LEGEND:
1. CONCRETE BARRIER WITH AR FENCE
2. AR FENCE WITH SOLID PLATE OVER HST
3. FUTURE UTILITY ENCASEMENT OPENING
4. MBGR

10 0 10 20
1"=10'

30 0 30 60
1"=30'

REV	DATE	BY	CHK	APP	DESCRIPTION

DESIGNED BY M. ANDREWS
DRAWN BY P. BARBER
CHECKED BY E. MORAN
IN CHARGE R. COFFIN
DATE 12/31/13

RECORD SET 15% DESIGN SUBMISSION - NOT FOR CONSTRUCTION

URS | HMM | ARUP
CALIFORNIA HIGH-SPEED TRAIN

CALIFORNIA HIGH-SPEED RAIL AUTHORITY

CALIFORNIA HIGH-SPEED TRAIN PROJECT
FRESNO TO BAKERSFIELD
HANFORD WEST BYPASS SUBSECTION
ALIGNMENT HW
OVERHEAD PLANNING STUDY
HOUSTON AVE

CONTRACT NO. HSR 06-0003
DRAWING NO. ST2312
SCALE AS SHOWN
SHEET NO. 9 OF 10

AND52110 12/18/2013 1:47:22 PM CAHSRP-r1.tbl CHSR_PDF_half_black.pltc:\pwworking\hmm\external\and52110\d0152519\FB-ST-2312-HW.dgn

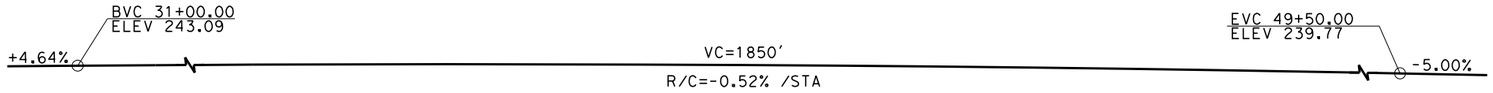

PROFILE GRADE
NO SCALE

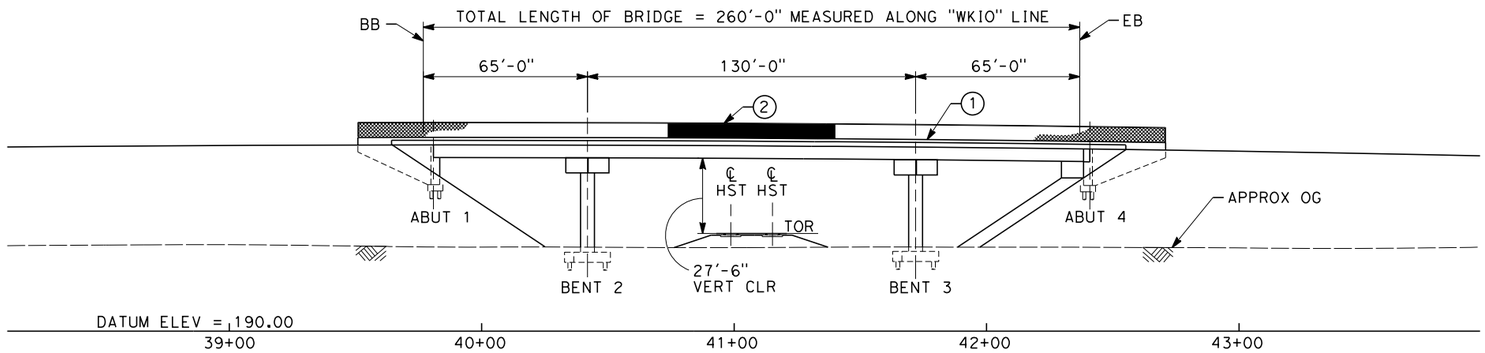

ELEVATION
SCALE: 1"=30'

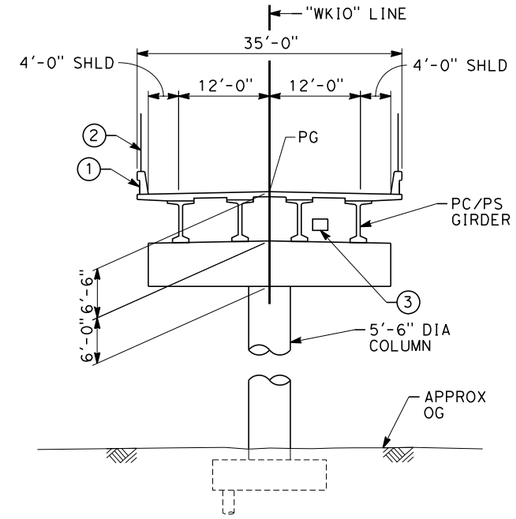

TYPICAL SECTION
SCALE: 1"=10'

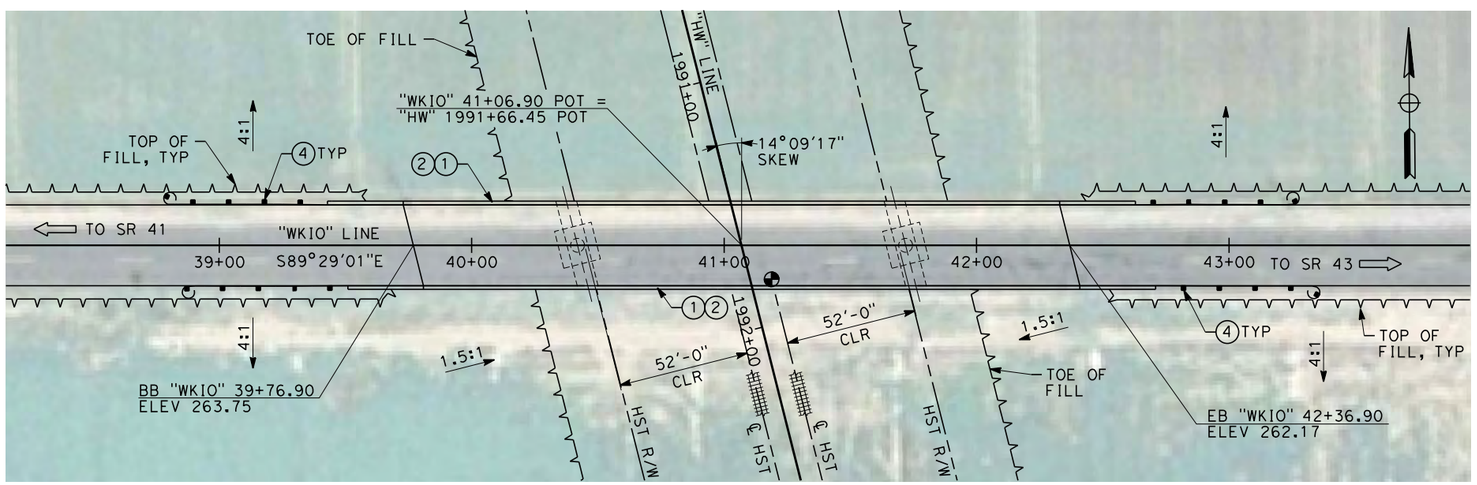

PLAN
SCALE: 1"=30'

NOTES:

1. ALL PILES NOT SHOWN
2. FOR MINIMUM VERTICAL CLEARANCES, HORIZONTAL CURVE DATA, AND DETAILS NOT SHOWN, SEE ROADWAY PLANS.

LEGEND:

1. CONCRETE BARRIER WITH AR FENCE
2. AR FENCE WITH SOLID PLATE OVER HST
3. FUTURE UTILITY ENCASEMENT OPENING
4. MBGR

10 0 10 20
1"=10'

30 0 30 60
1"=30'

REV	DATE	BY	CHK	APP	DESCRIPTION

DESIGNED BY M. ANDREWS
DRAWN BY P. BARBER
CHECKED BY E. MORAN
IN CHARGE R. COFFIN
DATE 12/31/13

RECORD SET 15% DESIGN SUBMISSION - NOT FOR CONSTRUCTION

URS | HMM | ARUP
CALIFORNIA HIGH-SPEED TRAIN

CALIFORNIA HIGH-SPEED RAIL AUTHORITY

CALIFORNIA HIGH-SPEED TRAIN PROJECT
FRESNO TO BAKERSFIELD
HANFORD WEST BYPASS SUBSECTION
ALIGNMENT HW
OVERHEAD PLANNING STUDY
IONA AVE

CONTRACT NO. HSR 06-0003
DRAWING NO. ST2313
SCALE AS SHOWN
SHEET NO. 10 OF 10

AND52110 12/18/2013 2:03:52 PM CAHSRP-r1.tbl CHSR_PDF_half_black.pltc:\pwworking\hmm\external\and52110\d0152519\FB-ST-2313-HW.dgn

REV	DATE	BY	CHK	APP	DESCRIPTION

DESIGNED BY L. SMITH
DRAWN BY D. BARNHART
CHECKED BY M. AMINI
IN CHARGE R. COFFIN
DATE 12/31/13

RECORD SET 15% DESIGN SUBMISSION - NOT FOR CONSTRUCTION

URS | HMM | ARUP
CALIFORNIA HIGH-SPEED TRAIN

CALIFORNIA HIGH-SPEED RAIL AUTHORITY

CALIFORNIA HIGH-SPEED TRAIN PROJECT FRESNO TO BAKERSFIELD

HANFORD WEST BYPASS SUBSECTION
ALIGNMENT HW2 (BELOW-GRADE) - MODIFIED
OVERHEAD PLANNING STUDY
KEY MAP

CONTRACT NO. HSR 06-0003
DRAWING NO. SB0054
SCALE AS SHOWN
SHEET NO. 1 OF 11

BAR59603 12/27/2013 11:35:41 AM CAHSRP-r1.tbl CHSR_PDF_half_black_20dpi.pwl \\bar-mm-wf-wp01\projects\hsr\working\hmm\external\bar59603\dms86692\FB-SB-0054-HW2.dgn

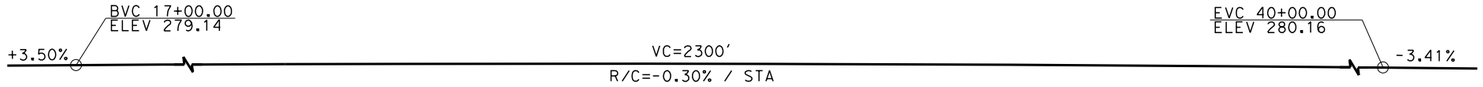

PROFILE GRADE
NO SCALE

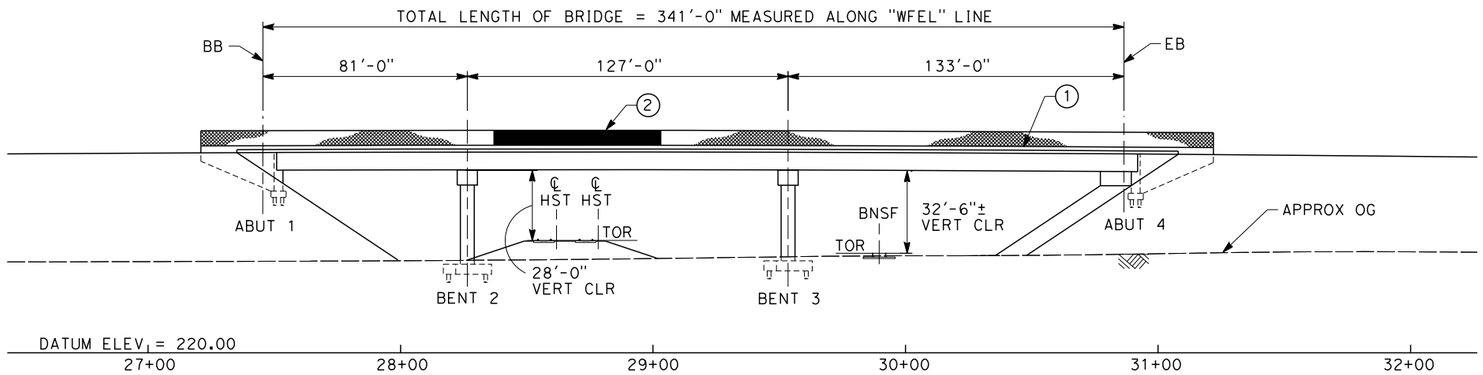

ELEVATION
SCALE: 1"=30'

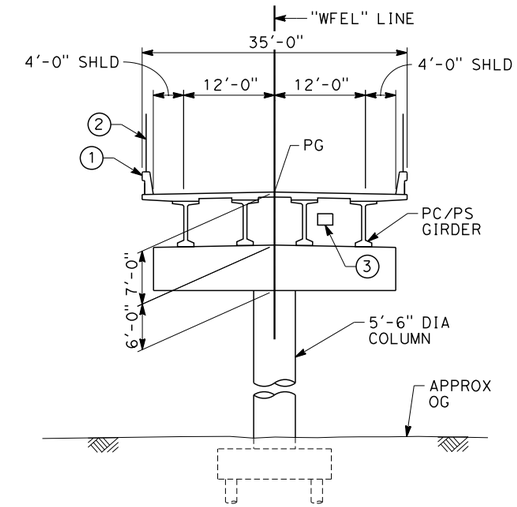

TYPICAL SECTION
SCALE: 1"=10'

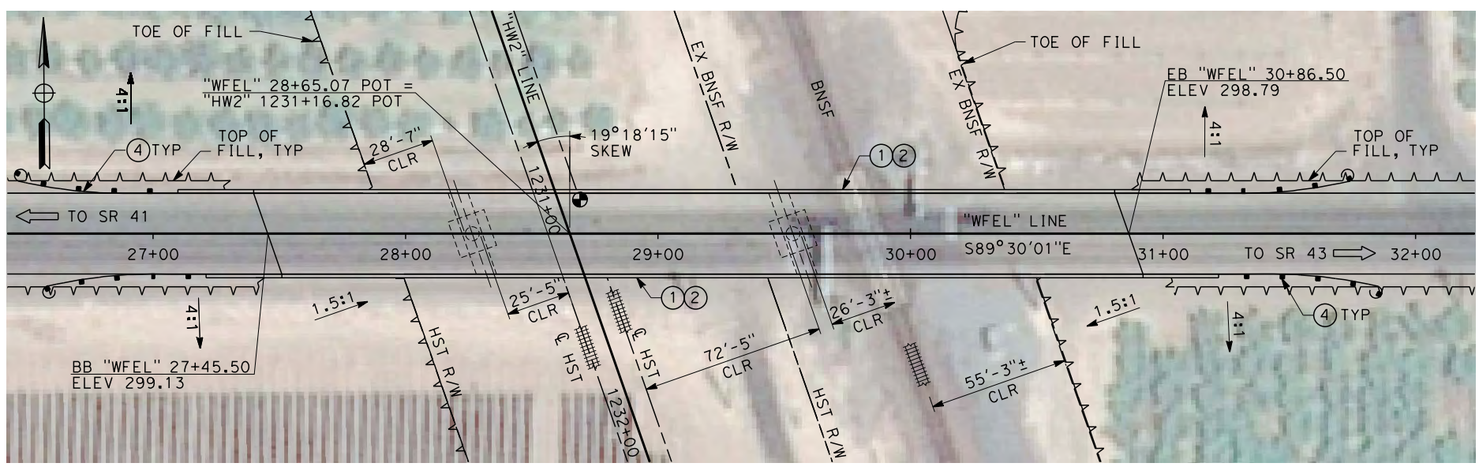

PLAN
SCALE: 1"=30'

NOTES:

1. ALL PILES NOT SHOWN.
2. FOR MINIMUM VERTICAL CLEARANCES, HORIZONTAL CURVE DATA, AND DETAILS NOT SHOWN, SEE ROADWAY PLANS.

LEGEND:

1. CONCRETE BARRIER WITH AR FENCE
2. AR FENCE WITH SOLID PLATE OVER HST
3. FUTURE UTILITY ENCASEMENT OPENING
4. MBGR

10 0 10 20 — 1"=10'

30 0 30 60 — 1"=30'

REV	DATE	BY	CHK	APP	DESCRIPTION

DESIGNED BY L. SMITH
DRAWN BY P. BARBER
CHECKED BY E. MORAN
IN CHARGE R. COFFIN
DATE 12/31/13

RECORD SET 15% DESIGN SUBMISSION - NOT FOR CONSTRUCTION

URS | HMM | ARUP
CALIFORNIA HIGH-SPEED TRAIN

CALIFORNIA HIGH-SPEED RAIL AUTHORITY

CALIFORNIA HIGH-SPEED TRAIN PROJECT
FRESNO TO BAKERSFIELD
HANFORD WEST BYPASS SUBSECTION
ALIGNMENT HW2 (BELOW-GRADE) - MODIFIED
OVERHEAD PLANNING STUDY
E ELKHORN AVE

CONTRACT NO. HSR 06-0003
DRAWING NO. ST2350
SCALE AS SHOWN
SHEET NO. 2 OF 11

MOR45030 12/26/2013 9:18:00 AM CAHSRP-r1.tbl CHSR_PDF_half_black_200.pdf pw:\\mor45030\dms86692\FB-ST-2350-HW2.dgn

PROFILE GRADE
NO SCALE

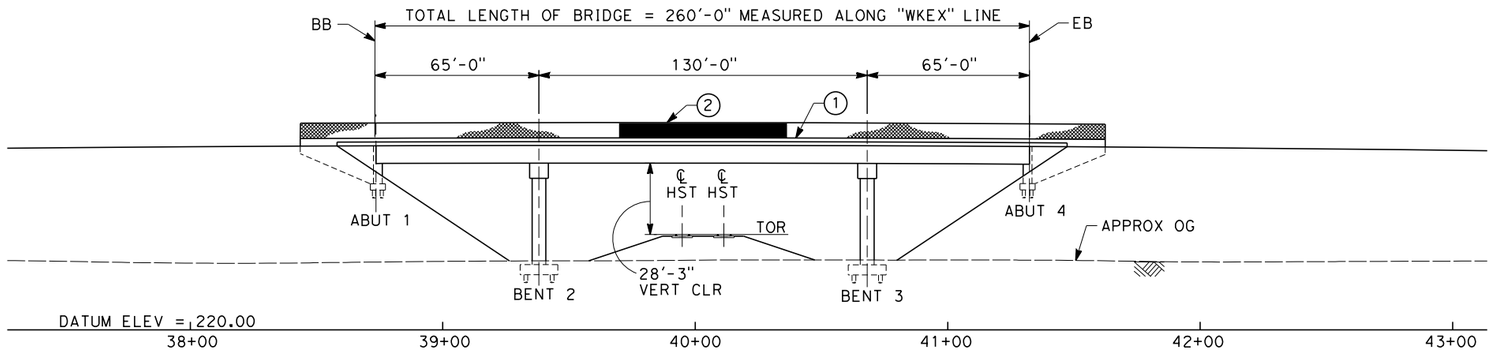

ELEVATION
SCALE: 1"=30'

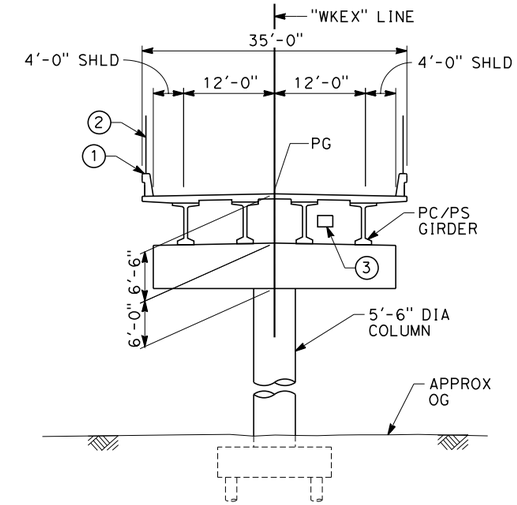

TYPICAL SECTION
SCALE: 1"=10'

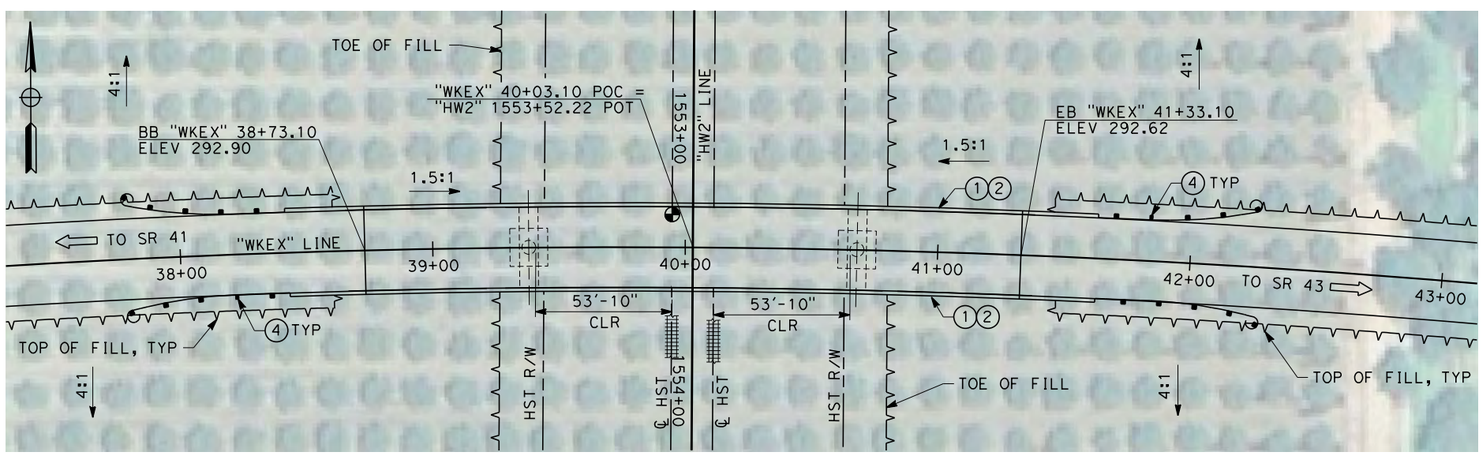

PLAN
SCALE: 1"=30'-0"

NOTES:

1. ALL PILES NOT SHOWN.
2. FOR MINIMUM VERTICAL CLEARANCES, HORIZONTAL CURVE DATA, AND DETAILS NOT SHOWN, SEE ROADWAY PLANS.

LEGEND:

1. CONCRETE BARRIER WITH AR FENCE
2. AR FENCE WITH SOLID PLATE OVER HST
3. FUTURE UTILITY ENCASEMENT OPENING
4. MBGR

10 0 10 20 — 1"=10'

30 0 30 60 — 1"=30'

REV	DATE	BY	CHK	APP	DESCRIPTION

DESIGNED BY L. SMITH
DRAWN BY P. BARBER
CHECKED BY E. MORAN
IN CHARGE R. COFFIN
DATE 12/31/13

RECORD SET 15% DESIGN SUBMISSION - NOT FOR CONSTRUCTION

URS | HMM | ARUP — CALIFORNIA HIGH-SPEED TRAIN

CALIFORNIA HIGH-SPEED RAIL AUTHORITY

CALIFORNIA HIGH-SPEED TRAIN PROJECT
FRESNO TO BAKERSFIELD
HANFORD WEST BYPASS SUBSECTION
ALIGNMENT HW2 (BELOW-GRADE) - MODIFIED
OVERHEAD PLANNING STUDY
EXCELSIOR AVE

CONTRACT NO. HSR 06-0003
DRAWING NO. ST2351
SCALE AS SHOWN
SHEET NO. 3 OF 11

Clark 12/23/2013 11:21:13 AM CAHSRP-r1.tbl CHSR_PDF_half_black.pltc:\pwworking\hmm\external\pro39009\dms86692\FB-ST-2351-HW2.dgn

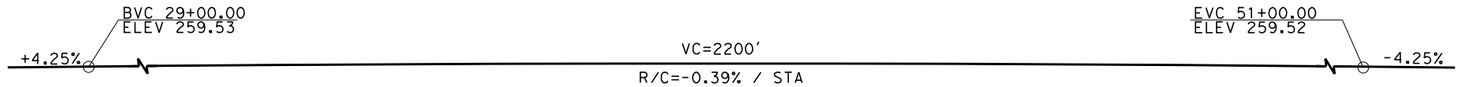

PROFILE GRADE
NO SCALE

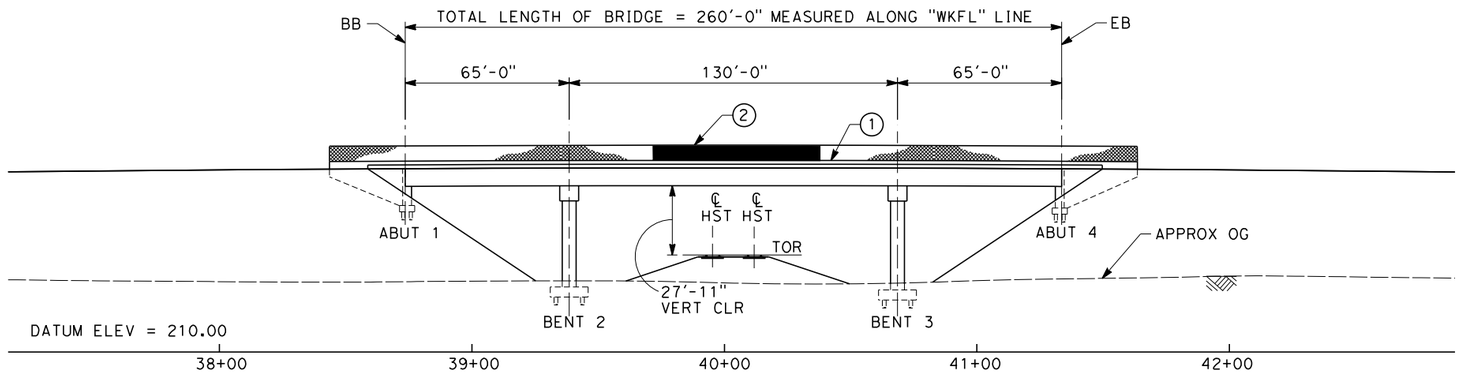

ELEVATION
SCALE: 1"=30'

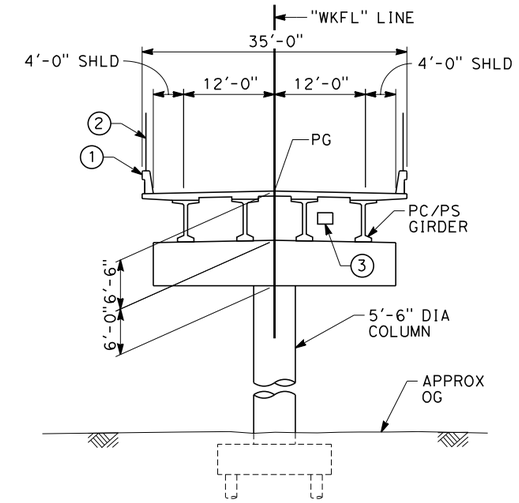

TYPICAL SECTION
SCALE: 1"=10'

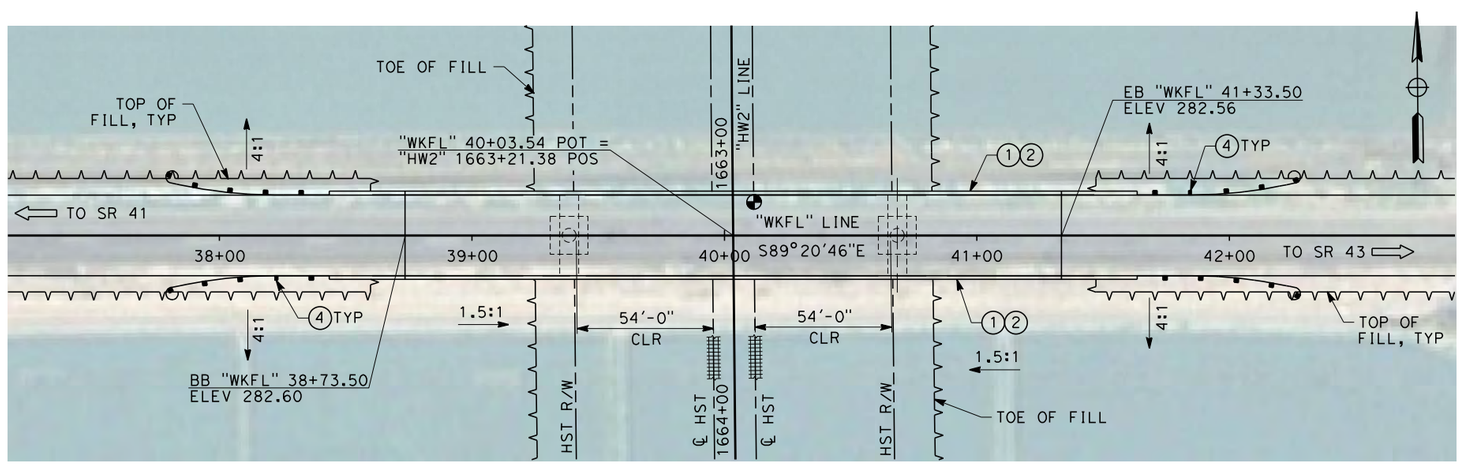

PLAN
SCALE: 1"=30'

NOTES:

1. ALL PILES NOT SHOWN.
2. FOR MINIMUM VERTICAL CLEARANCES, HORIZONTAL CURVE DATA, AND DETAILS NOT SHOWN, SEE ROADWAY PLANS.

LEGEND:

1. CONCRETE BARRIER WITH AR FENCE
2. AR FENCE WITH SOLID PLATE OVER HST
3. FUTURE UTILITY ENCASEMENT OPENING
4. MBGR

10 0 10 20
1"=10'

30 0 30 60
1"=30'

REV	DATE	BY	CHK	APP	DESCRIPTION

DESIGNED BY L. SMITH
DRAWN BY P. BARBER
CHECKED BY E. MORAN
IN CHARGE R. COFFIN
DATE 12/31/13

RECORD SET 15% DESIGN SUBMISSION - NOT FOR CONSTRUCTION

URS | HMM | ARUP
CALIFORNIA HIGH-SPEED TRAIN

CALIFORNIA HIGH-SPEED RAIL AUTHORITY

CALIFORNIA HIGH-SPEED TRAIN PROJECT
FRESNO TO BAKERSFIELD
HANFORD WEST BYPASS SUBSECTION
ALIGNMENT HW2 (BELOW-GRADE) - MODIFIED
OVERHEAD PLANNING STUDY
FLINT AVE

CONTRACT NO. HSR 06-0003
DRAWING NO. ST2352
SCALE AS SHOWN
SHEET NO. 4 OF 11

12/23/2013 11:28:04 AM CAHSRP-r1.tbl CHSR_PDF_half_black.pltc:\pwworking\hmm\external\pro39009\dms86692\FB-ST-2352-HW2.dgn
Clark

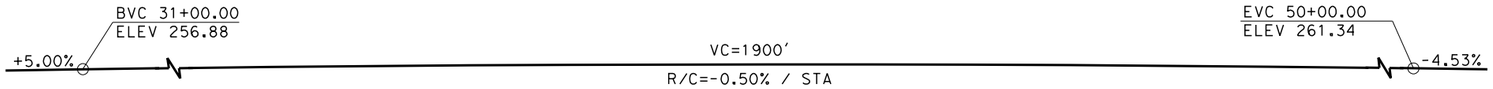

PROFILE GRADE
NO SCALE

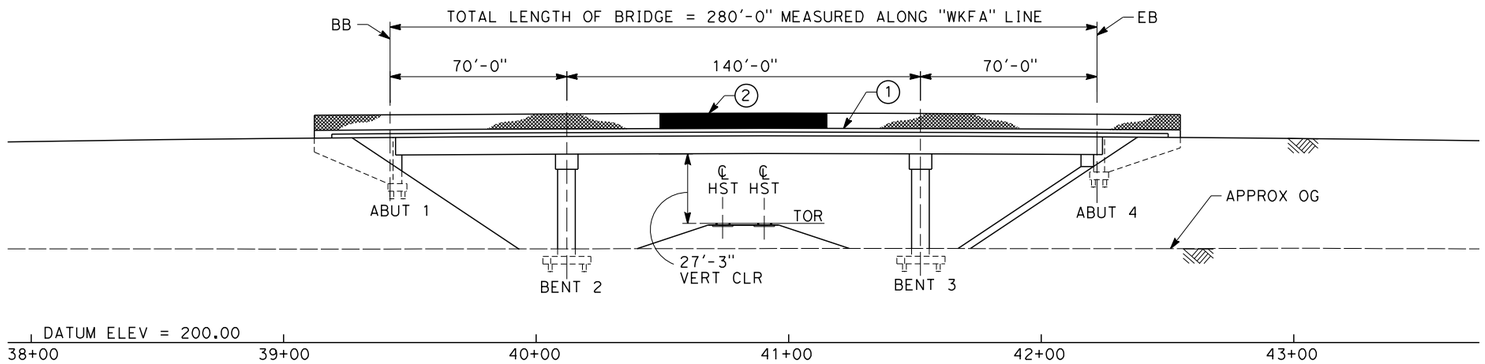

ELEVATION
SCALE: 1"=30'

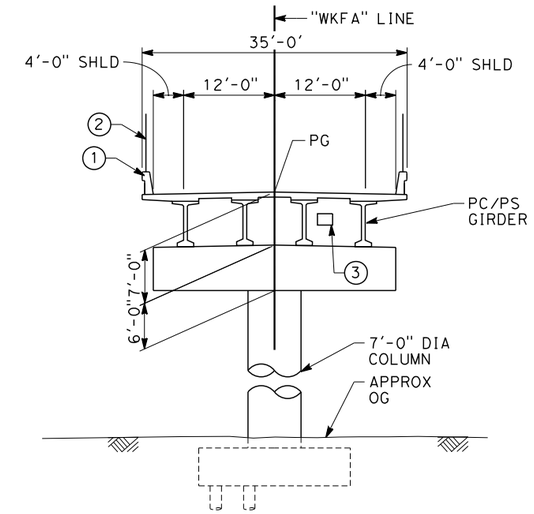

TYPICAL SECTION
SCALE: 1"=10'

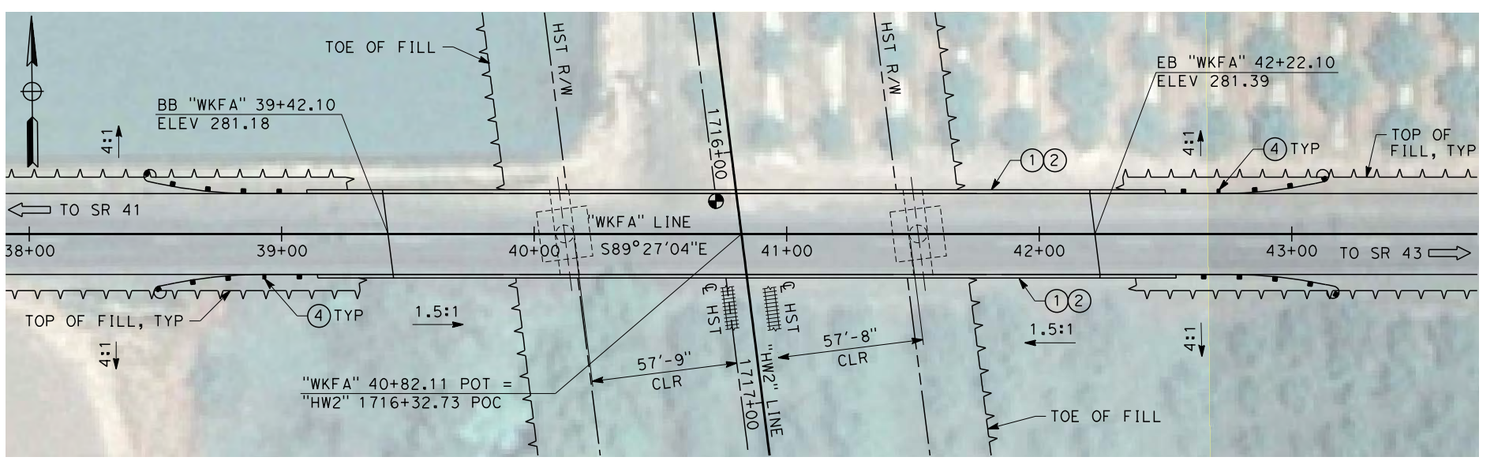

PLAN
SCALE: 1"=30'

NOTES:

1. ALL PILES NOT SHOWN.
2. FOR MINIMUM VERTICAL CLEARANCES, HORIZONTAL CURVE DATA, AND DETAILS NOT SHOWN, SEE ROADWAY PLANS.

LEGEND:

1. CONCRETE BARRIER WITH AR FENCE
2. AR FENCE WITH SOLID PLATE OVER HST
3. FUTURE UTILITY ENCASEMENT OPENING
4. MBGR

10 0 10 20 — 1"=10'

30 0 30 60 — 1"=30'

REV	DATE	BY	CHK	APP	DESCRIPTION

DESIGNED BY L. SMITH
DRAWN BY P. BARBER
CHECKED BY E. MORAN
IN CHARGE R. COFFIN
DATE 12/31/13

RECORD SET 15% DESIGN SUBMISSION - NOT FOR CONSTRUCTION

URS | HMM | ARUP
CALIFORNIA HIGH-SPEED TRAIN

CALIFORNIA HIGH-SPEED RAIL AUTHORITY

CALIFORNIA HIGH-SPEED TRAIN PROJECT
FRESNO TO BAKERSFIELD
HANFORD WEST BYPASS SUBSECTION
ALIGNMENT HW2 (BELOW-GRADE) - MODIFIED
OVERHEAD PLANNING STUDY
FARGO AVE

CONTRACT NO. HSR 06-0003
DRAWING NO. ST2353
SCALE AS SHOWN
SHEET NO. 5 OF 11

BAR59603 12/24/2013 11:03:19 AM CAHSRP-r1.tbl CHSR_PDF_half_black_2003.pdf \\bar59603\dms86692\FB-ST-2353-HW2.dgn

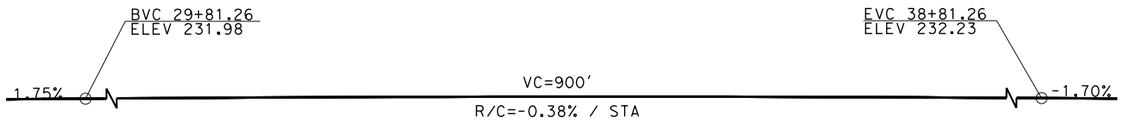

PROFILE GRADE

NO SCALE

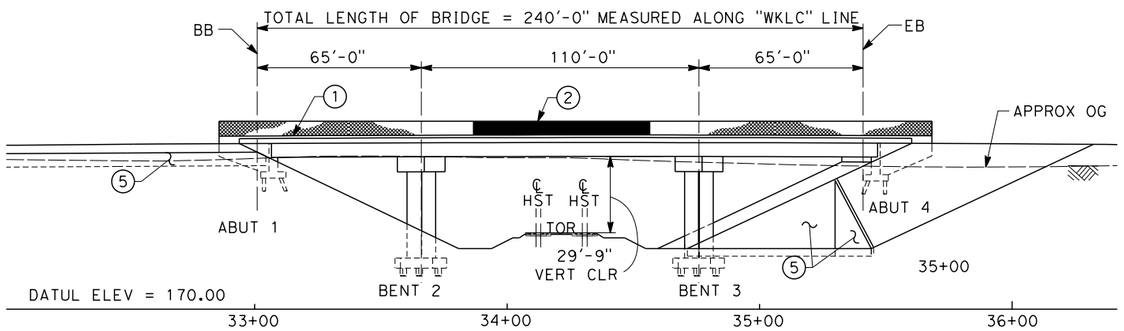

ELEVATION

SCALE: 1"=30'

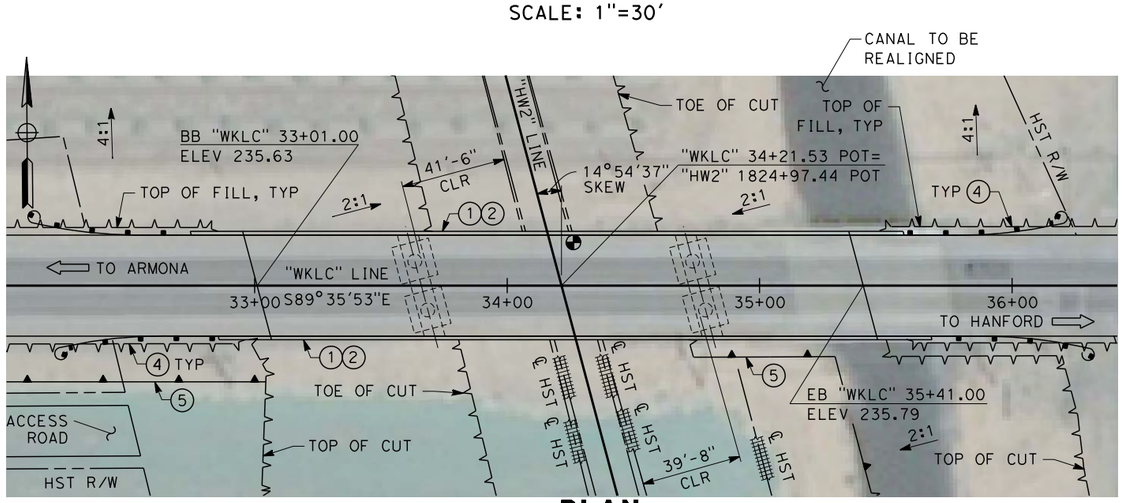

PLAN

SCALE: 1"=30'

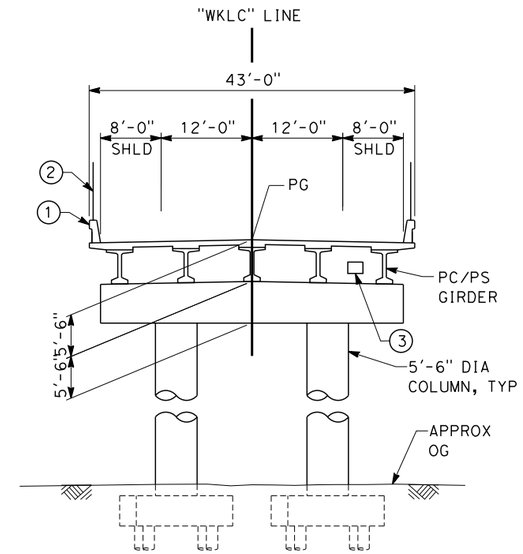

TYPICAL SECTION

SCALE: 1"=10'

NOTES:

1. ALL PILES NOT SHOWN.
2. FOR MINIMUM VERTICAL CLEARANCES, HORIZONTAL CURVE DATA, AND DETAILS NOT SHOWN, SEE ROADWAY PLANS.

LEGEND:

1. CONCRETE BARRIER WITH AR FENCE
2. AR FENCE WITH SOLID PLATE OVER HST
3. FUTURE UTILITY ENCASEMENT OPENING
4. MBGR
5. RETAINING WALL

10 0 10 20 — 1"=10'

30 0 30 60 — 1"=30'

REV	DATE	BY	CHK	APP	DESCRIPTION

DESIGNED BY L. SMITH
DRAWN BY P. BARBER
CHECKED BY E. MORAN
IN CHARGE R. COFFIN
DATE 12/31/13

RECORD SET 15% DESIGN SUBMISSION - NOT FOR CONSTRUCTION

URS | HMM | ARUP — CALIFORNIA HIGH-SPEED TRAIN

CALIFORNIA HIGH-SPEED RAIL AUTHORITY

CALIFORNIA HIGH-SPEED TRAIN PROJECT
FRESNO TO BAKERSFIELD
HANFORD WEST BYPASS SUBSECTION
ALIGNMENT HW2 (BELOW-GRADE) - MODIFIED
OVERHEAD PLANNING STUDY
W LACEY BLVD

CONTRACT NO. HSR 06-0003
DRAWING NO. ST2354
SCALE AS SHOWN
SHEET NO. 6 OF 11

MOR45030 12/26/2013 9:05:54 AM CAHSRP-r1.tbl CHSR_PDF_half_black_2008.pdf \\dms86692\workingvhmm\external\mor45030\dms86692\VFB-ST-2354-HW2.dgn

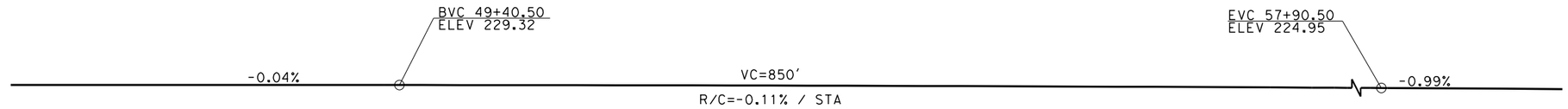

PROFILE GRADE

NO SCALE

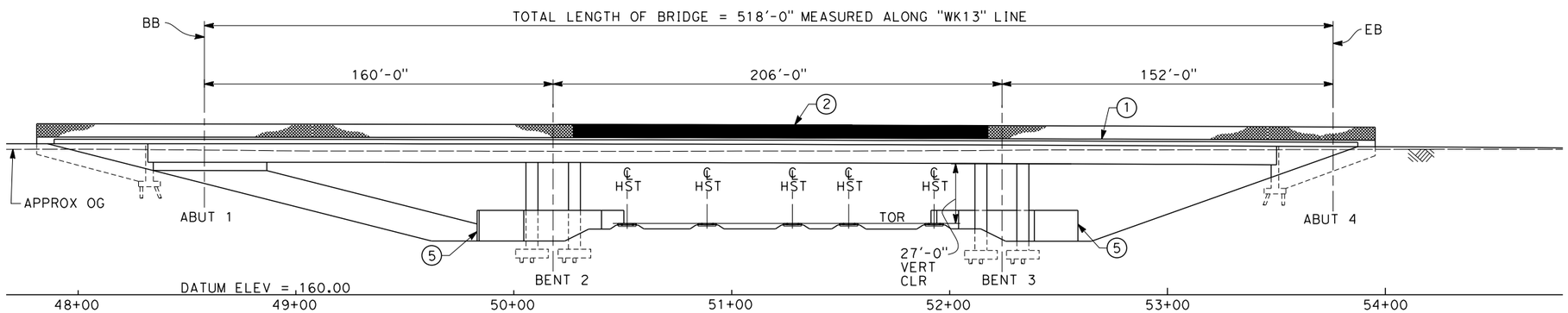

ELEVATION

SCALE: 1"=30'

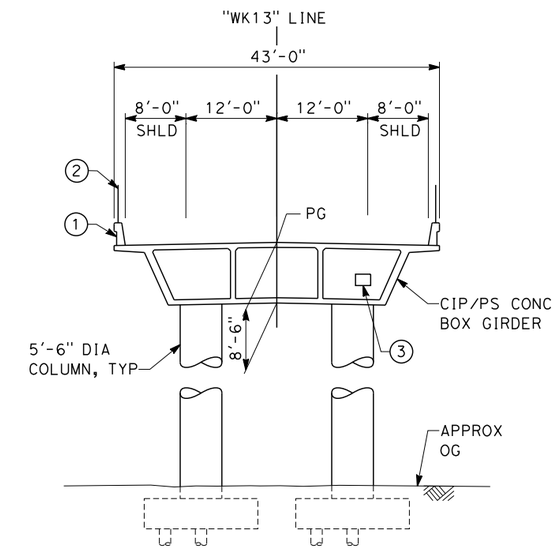

TYPICAL SECTION

SCALE: 1"=10'

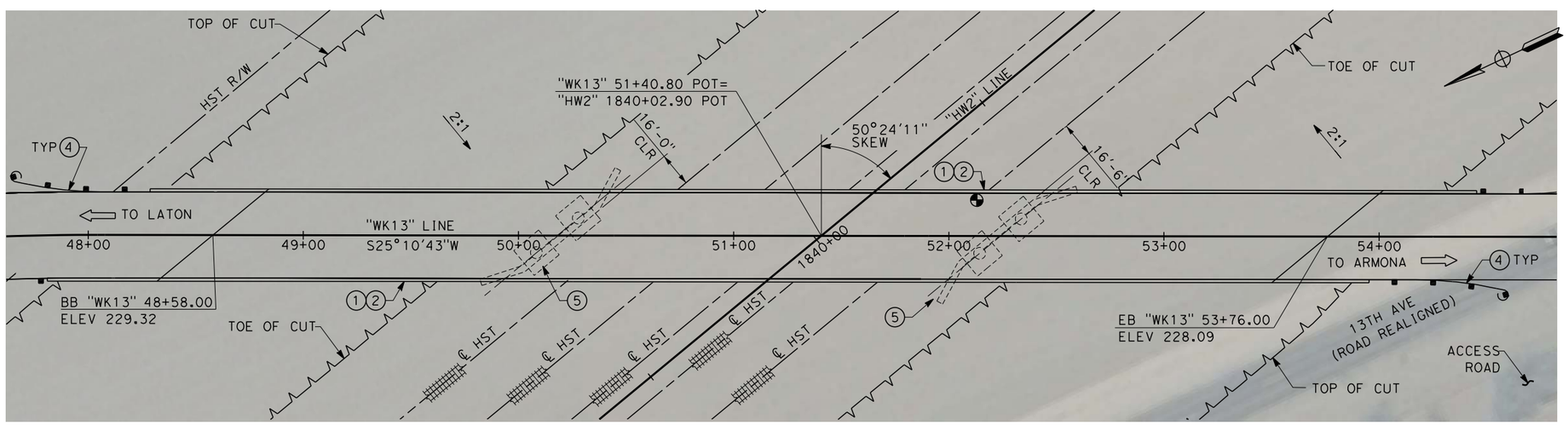

PLAN

SCALE: 1"=30'

NOTES:

1. ALL PILES NOT SHOWN.
2. FOR MINIMUM VERTICAL CLEARANCES, HORIZONTAL CURVE DATA, AND DETAILS NOT SHOWN, SEE ROADWAY PLANS.

LEGEND:

1. CONCRETE BARRIER WITH AR FENCE
2. AR FENCE WITH SOLID PLATE OVER HST
3. FUTURE UTILITY ENCASEMENT OPENING
4. MBGR
5. PIER PROTECTION

10 0 10 20 — 1"=10'

30 0 30 60 — 1"=30'

REV	DATE	BY	CHK	APP	DESCRIPTION

DESIGNED BY L. SMITH
DRAWN BY P. BARBER
CHECKED BY E. MORAN
IN CHARGE R. COFFIN
DATE 12/31/13

RECORD SET 15% DESIGN SUBMISSION - NOT FOR CONSTRUCTION

URS | HMM | ARUP — CALIFORNIA HIGH-SPEED TRAIN

CALIFORNIA HIGH-SPEED RAIL AUTHORITY

CALIFORNIA HIGH-SPEED TRAIN PROJECT
FRESNO TO BAKERSFIELD
HANFORD WEST BYPASS SUBSECTION
ALIGNMENT HW2 (BELOW-GRADE) - MODIFIED
OVERHEAD PLANNING STUDY
13TH AVE

CONTRACT NO. HSR 06-0003
DRAWING NO. ST2355
SCALE AS SHOWN
SHEET NO. 7 OF 11

MOR45030 12/26/2013 1:46:41 PM CAHSRP-r1.tbl CHSR_PDF_half_black_200dpi.pwd

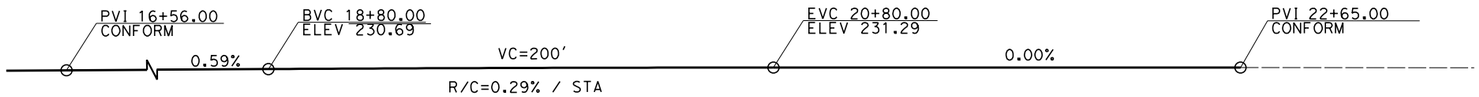

PROFILE GRADE
NO SCALE

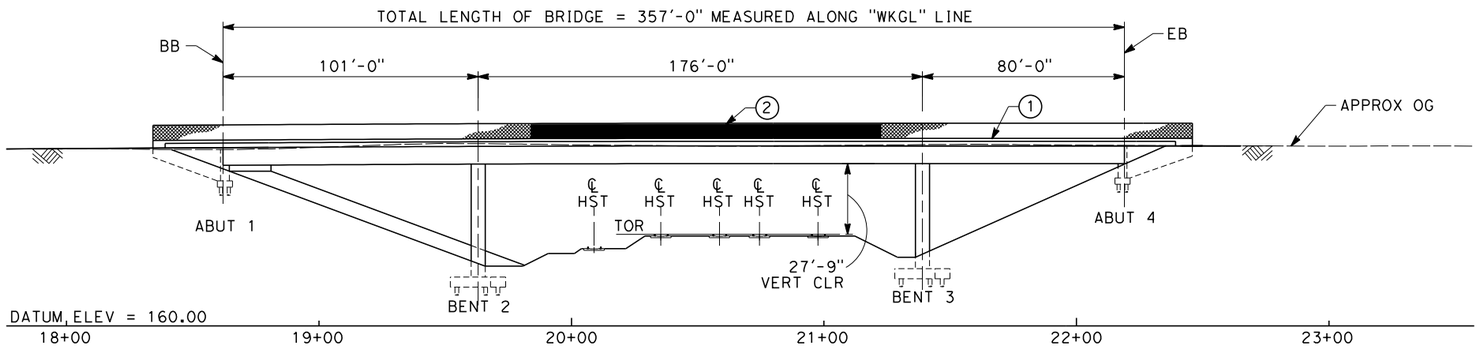

DEVELOPED ELEVATION
SCALE: 1"=30'

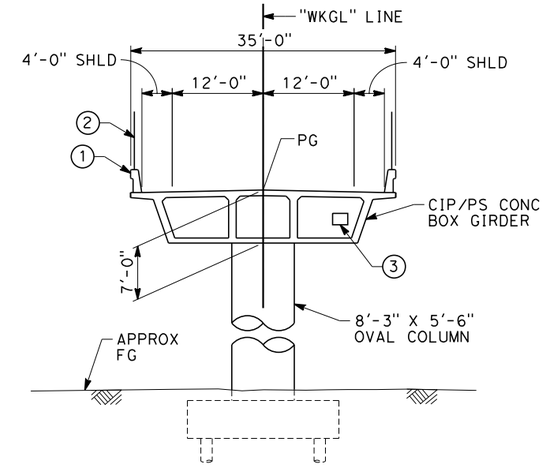

TYPICAL SECTION
SCALE: 1"=10'

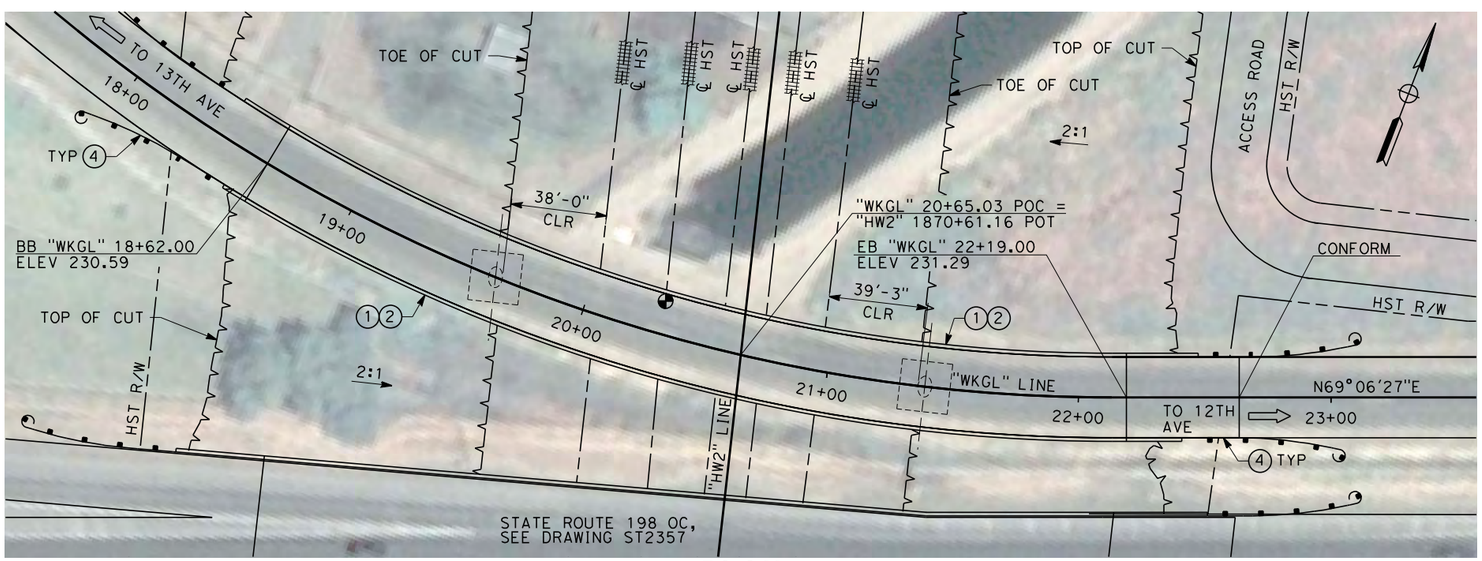

PLAN
SCALE: 1"=30'

NOTES:

1. ALL PILES NOT SHOWN.
2. FOR MINIMUM VERTICAL CLEARANCES, HORIZONTAL CURVE DATA, AND DETAILS NOT SHOWN, SEE ROADWAY PLANS.

LEGEND:

1. CONCRETE BARRIER WITH AR FENCE
2. AR FENCE WITH SOLID PLATE OVER HST
3. FUTURE UTILITY ENCASEMENT OPENING
4. MBGR

10 0 10 20 — 1"=10'

30 0 30 60 — 1"=30'

REV	DATE	BY	CHK	APP	DESCRIPTION

DESIGNED BY L. SMITH
DRAWN BY P. BARBER
CHECKED BY E. MORAN
IN CHARGE R. COFFIN
DATE 12/31/13

RECORD SET 15% DESIGN SUBMISSION - NOT FOR CONSTRUCTION

URS | HMM | ARUP — CALIFORNIA HIGH-SPEED TRAIN

CALIFORNIA HIGH-SPEED RAIL AUTHORITY

CALIFORNIA HIGH-SPEED TRAIN PROJECT
FRESNO TO BAKERSFIELD
HANFORD WEST BYPASS SUBSECTION
ALIGNMENT HW2 (BELOW-GRADE) - MODIFIED
OVERHEAD PLANNING STUDY
GLENDALE AVE

CONTRACT NO. HSR 06-0003
DRAWING NO. ST2356
SCALE AS SHOWN
SHEET NO. 8 OF 11

12/24/2013 10:42:19 AM CAHSRP-r1.tbl CHSR_PDF_half_black.pltc:\pwworking\hmm\external\pro39009\dms86692\FB-ST-2356-HW2.dgn
Clark

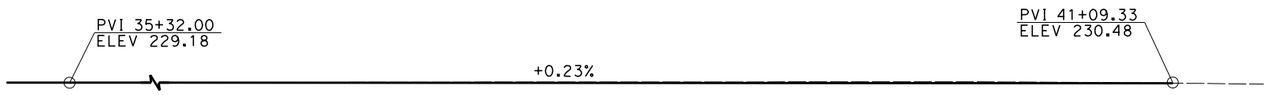

PROFILE GRADE
NO SCALE

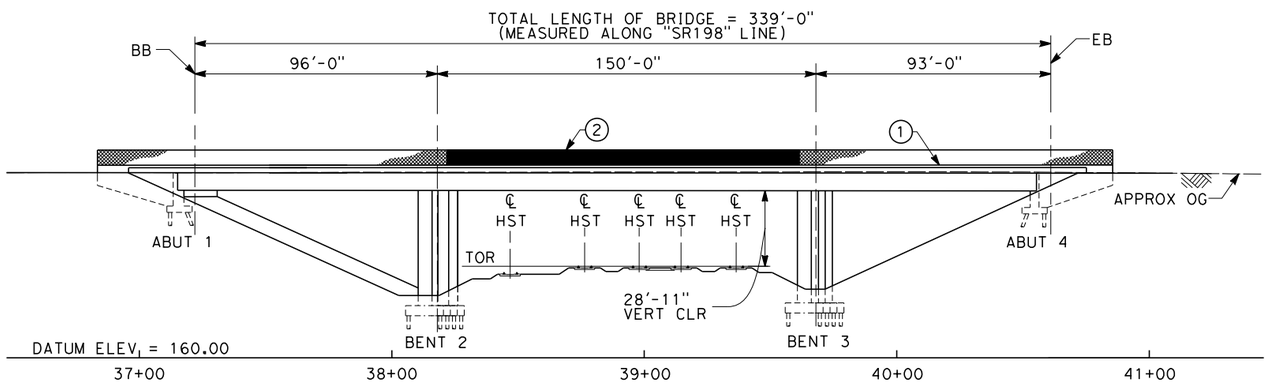

ELEVATION
SCALE: 1"=30'

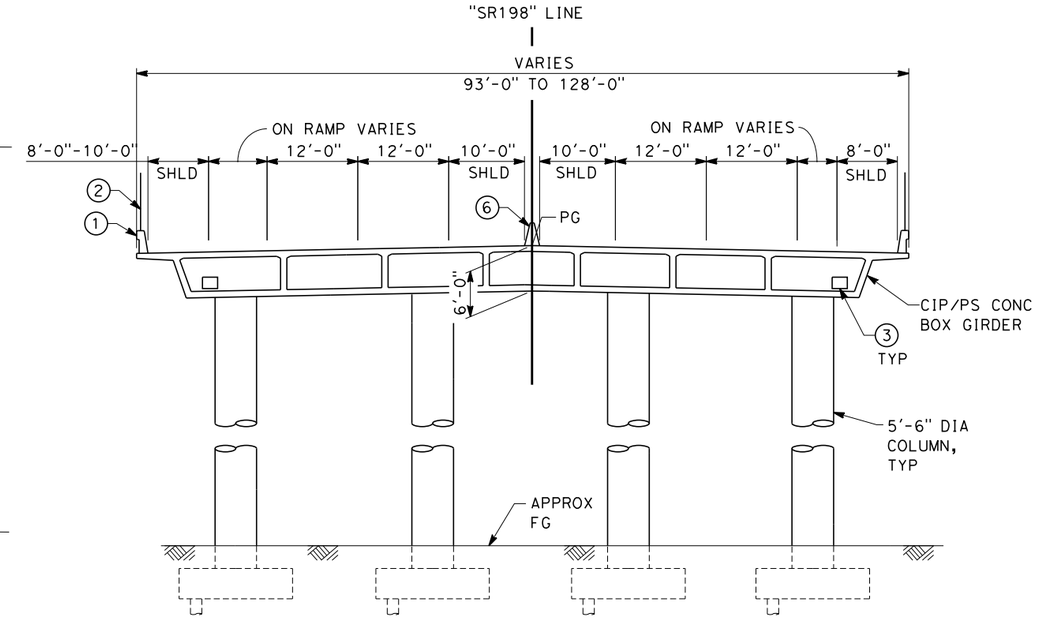

TYPICAL SECTION
SCALE: 1"=10'

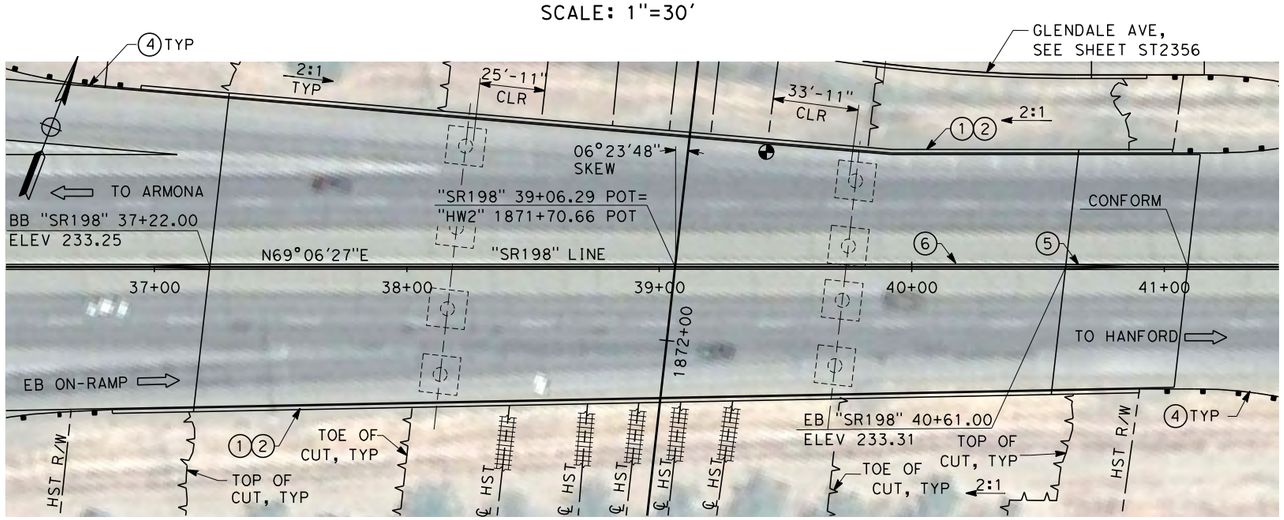

PLAN
SCALE: 1"=30'

NOTES:

1. ALL PILES NOT SHOWN.
2. FOR MINIMUM VERTICAL CLEARANCES, HORIZONTAL CURVE DATA, AND DETAILS NOT SHOWN, SEE ROADWAY PLANS.
3. STAGED CONSTRUCTION TO BE COORDINATED WITH LOCAL AGENCIES.

LEGEND:

1. CONCRETE BARRIER WITH AR FENCE
2. AR FENCE WITH SOLID PLATE OVER HST
3. FUTURE UTILITY ENCASEMENT OPENING
4. MBGR
5. CRASH CUSHION
6. CONCRETE BARRIER (TYPE 60)

10 0 10 20 — 1"=10'

30 0 30 60 — 1"=30'

REV	DATE	BY	CHK	APP	DESCRIPTION

DESIGNED BY L. SMITH
DRAWN BY P. BARBER
CHECKED BY E. MORAN
IN CHARGE R. COFFIN
DATE 12/31/13

RECORD SET 15% DESIGN SUBMISSION - NOT FOR CONSTRUCTION

URS | HMM | ARUP
CALIFORNIA HIGH-SPEED TRAIN

CALIFORNIA HIGH-SPEED RAIL AUTHORITY

CALIFORNIA HIGH-SPEED TRAIN PROJECT
FRESNO TO BAKERSFIELD
HANFORD WEST BYPASS SUBSECTION
ALIGNMENT HW2 (BELOW-GRADE) - MODIFIED
OVERHEAD PLANNING STUDY
STATE ROUTE 198

CONTRACT NO. HSR 06-0003
DRAWING NO. ST2357
SCALE AS SHOWN
SHEET NO. 9 OF 11

Clark 12/27/2013 8:44:35 AM CAHSRP-r1.tbl CHSR_PDF_half_black.pltc:\pwworking\hmm\external\pro39009\dms86692\FB-ST-2357-HW2.dgn

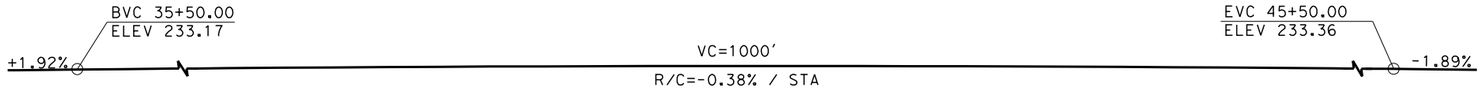

PROFILE GRADE
NO SCALE

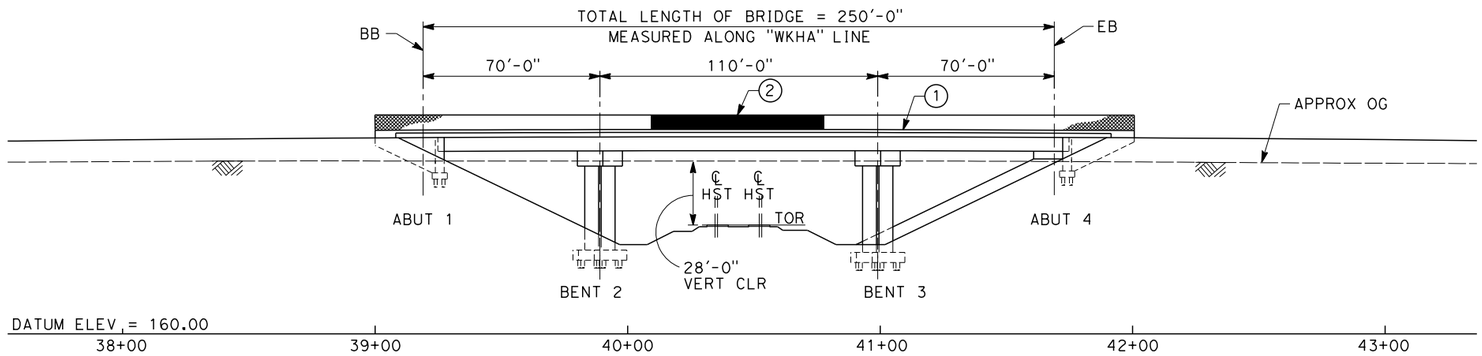

ELEVATION
SCALE: 1"=30'

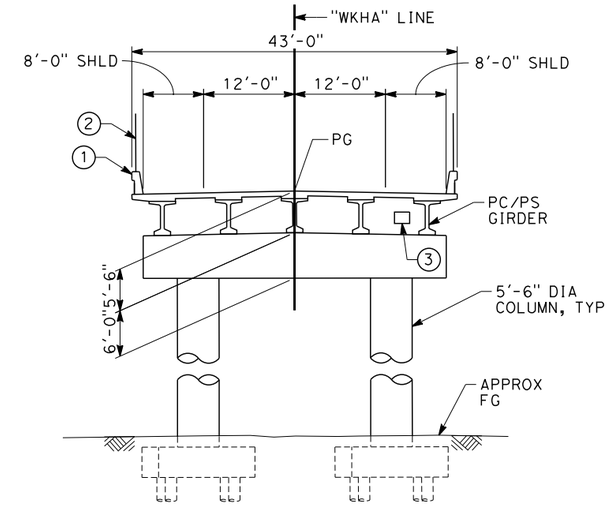

TYPICAL SECTION
SCALE: 1"=10'

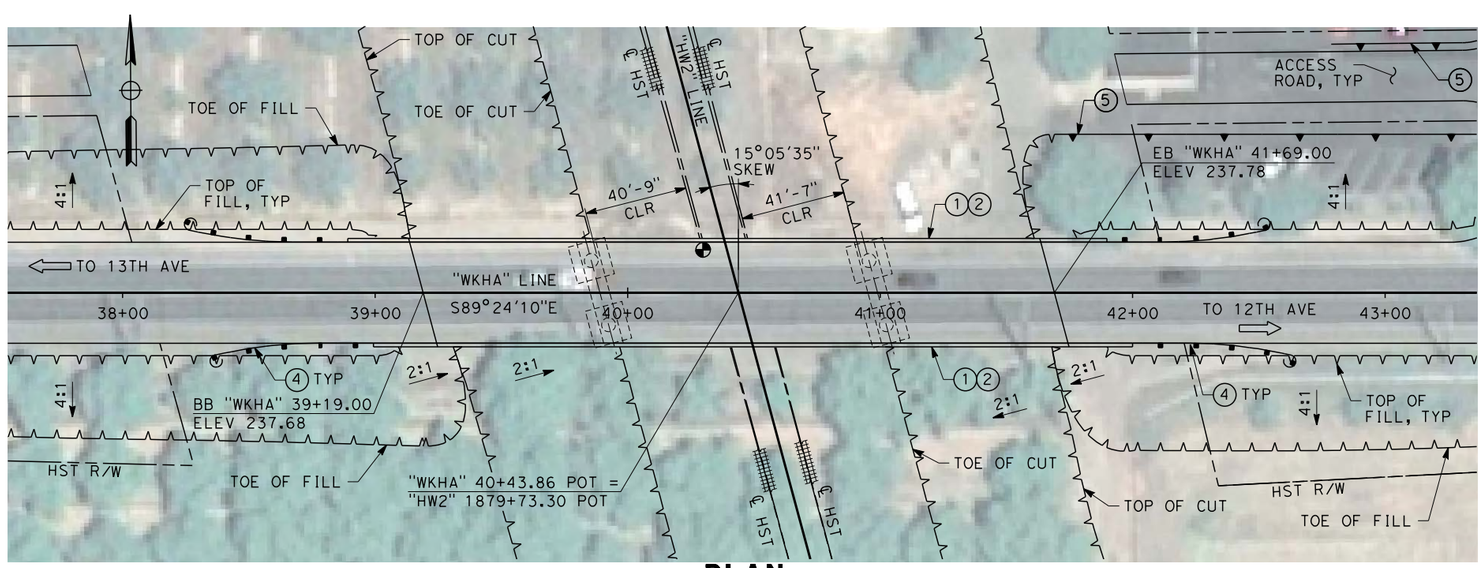

PLAN
SCALE: 1"=30'

NOTES:

1. ALL PILES NOT SHOWN.
2. FOR MINIMUM VERTICAL CLEARANCES, HORIZONTAL CURVE DATA, AND DETAILS NOT SHOWN, SEE ROADWAY PLANS.

LEGEND:

1. CONCRETE BARRIER WITH AR FENCE
2. AR FENCE WITH SOLID PLATE OVER HST
3. FUTURE UTILITY ENCASEMENT OPENING
4. MBGR
5. RETAINING WALL

10 0 10 20
1"=10'

30 0 30 60
1"=30'

REV	DATE	BY	CHK	APP	DESCRIPTION

DESIGNED BY L. SMITH
DRAWN BY P. BARBER
CHECKED BY E. MORAN
IN CHARGE R. COFFIN
DATE 12/31/13

RECORD SET 15% DESIGN SUBMISSION - NOT FOR CONSTRUCTION

URS | HMM | ARUP
CALIFORNIA HIGH-SPEED TRAIN

CALIFORNIA HIGH-SPEED RAIL AUTHORITY

CALIFORNIA HIGH-SPEED TRAIN PROJECT
FRESNO TO BAKERSFIELD
HANFORD WEST BYPASS SUBSECTION
ALIGNMENT HW2 (BELOW-GRADE) - MODIFIED
OVERHEAD PLANNING STUDY
HANFORD ARMONA RD

CONTRACT NO. HSR 06-0003
DRAWING NO. ST2358
SCALE AS SHOWN
SHEET NO. 10 OF 11

MOR45030 12/26/2013 9:00:55 AM CAHSRP-r1.tbl CHSR_PDF_half_black_200.pdf working\hmm\external\mor45030\dms86692\FB-ST-2358-HW2.dgn

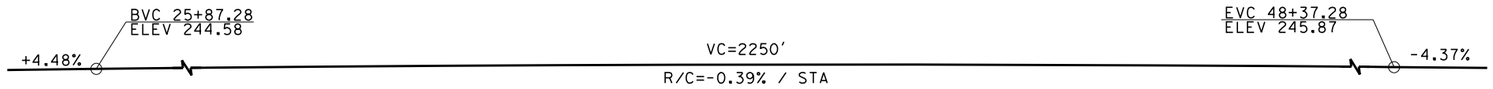

PROFILE GRADE
NO SCALE

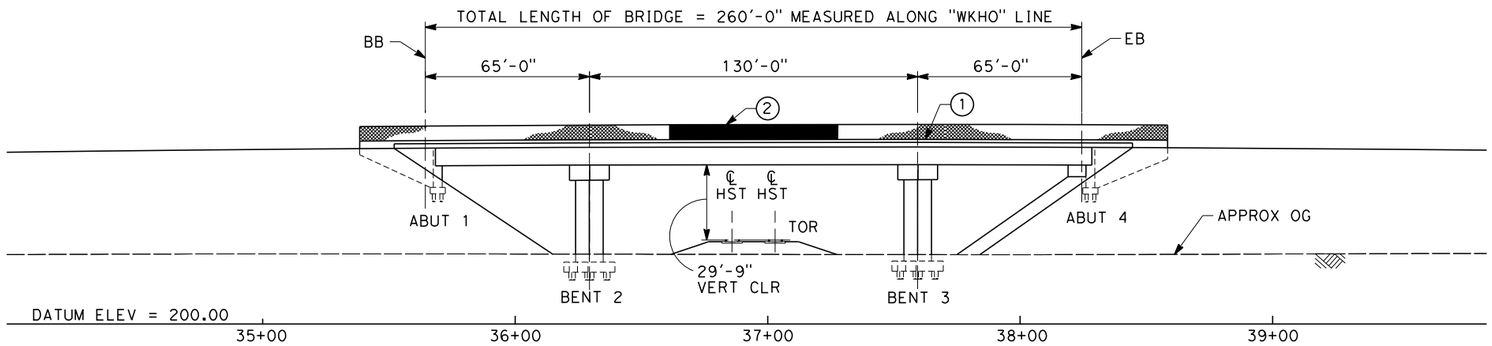

ELEVATION
SCALE: 1"=30'

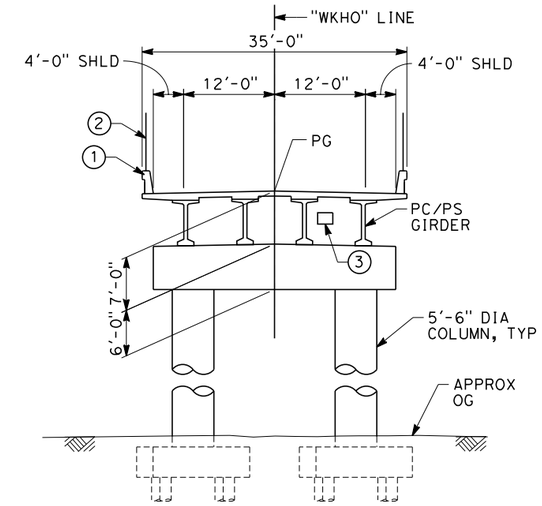

TYPICAL SECTION
SCALE: 1"=10'

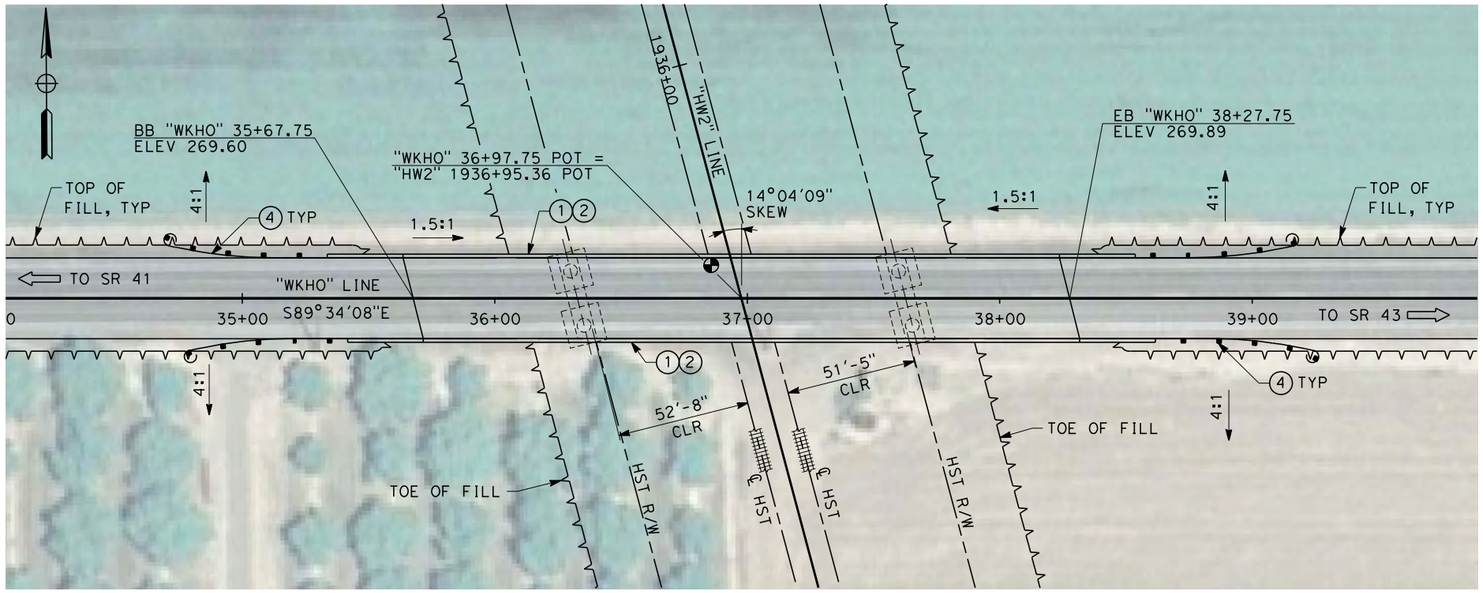

PLAN
SCALE: 1"=30'

NOTES:

1. ALL PILES NOT SHOWN.
2. FOR MINIMUM VERTICAL CLEARANCES, HORIZONTAL CURVE DATA, AND DETAILS NOT SHOWN, SEE ROADWAY PLANS.

LEGEND:

1. CONCRETE BARRIER WITH AR FENCE
2. AR FENCE WITH SOLID PLATE OVER HST
3. FUTURE UTILITY ENCASEMENT OPENING
4. MBGR

10 0 10 20 — 1"=10'

30 0 30 60 — 1"=30'

REV	DATE	BY	CHK	APP	DESCRIPTION

DESIGNED BY L. SMITH
DRAWN BY P. BARBER
CHECKED BY E. MORAN
IN CHARGE R. COFFIN
DATE 12/31/13

RECORD SET 15% DESIGN SUBMISSION - NOT FOR CONSTRUCTION

URS | HMM | ARUP — CALIFORNIA HIGH-SPEED TRAIN

CALIFORNIA HIGH-SPEED RAIL AUTHORITY

CALIFORNIA HIGH-SPEED TRAIN PROJECT
FRESNO TO BAKERSFIELD
HANFORD WEST BYPASS SUBSECTION
ALIGNMENT HW2 (BELOW-GRADE) - MODIFIED
OVERHEAD PLANNING STUDY
HOUSTON AVE

CONTRACT NO. HSR 06-0003
DRAWING NO. ST2359
SCALE AS SHOWN
SHEET NO. 11 OF 11

Clark 12/23/2013 7:10:09 PM CAHSRP-r1.tbl CHSR_PDF_half_black.pltct:\pwworking\hmm\external\pro39009\dms86692\FB-ST-2359-HW2.dgn

REV	DATE	BY	CHK	APP	DESCRIPTION

DESIGNED BY B. LUSCOMBE
DRAWN BY D. BARNHART
CHECKED BY M. AMINI
IN CHARGE R. COFFIN
DATE 12/31/13

RECORD SET 15% DESIGN SUBMISSION - NOT FOR CONSTRUCTION

URS | HMM | ARUP
CALIFORNIA HIGH-SPEED TRAIN

CALIFORNIA HIGH-SPEED RAIL AUTHORITY

CALIFORNIA HIGH-SPEED TRAIN PROJECT FRESNO TO BAKERSFIELD

KAWEAH SUBSECTION
ALIGNMENT K1
OVERHEAD PLANNING STUDY
KEY MAP

CONTRACT NO. HSR 06-0003
DRAWING NO. SB0056
SCALE AS SHOWN
SHEET NO. 1 OF 5

AND52110 12/21/2013 8:59:46 AM CAHSRP-r1.tbl CHSR_PDF_half_black.plt c:\pwworking\hmm\external\and52110\d0133777\FB-SB-0056-K1.dgn

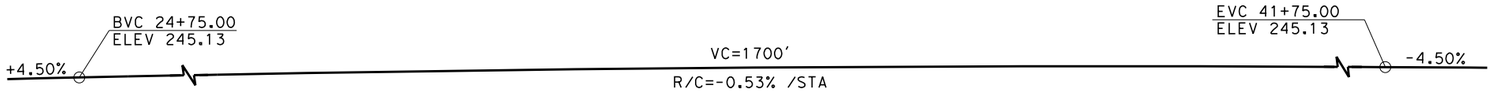

PROFILE GRADE
NO SCALE

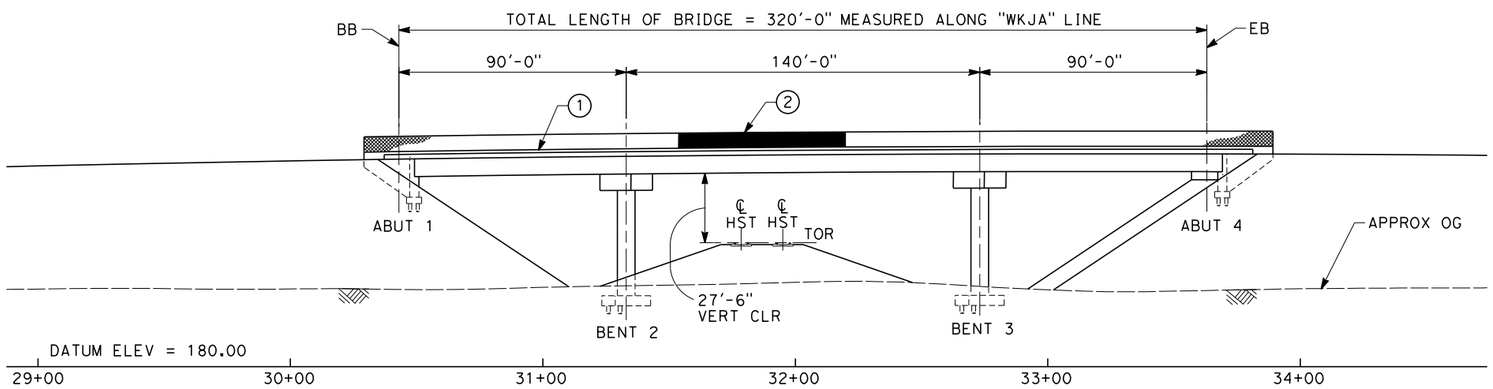

ELEVATION
SCALE: 1"=30'

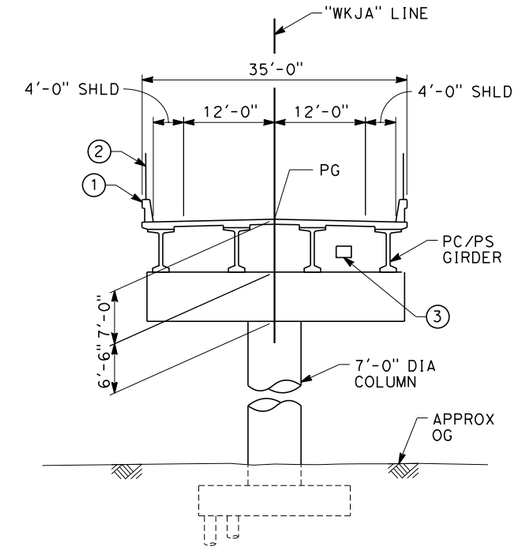

TYPICAL SECTION
SCALE: 1"=10'

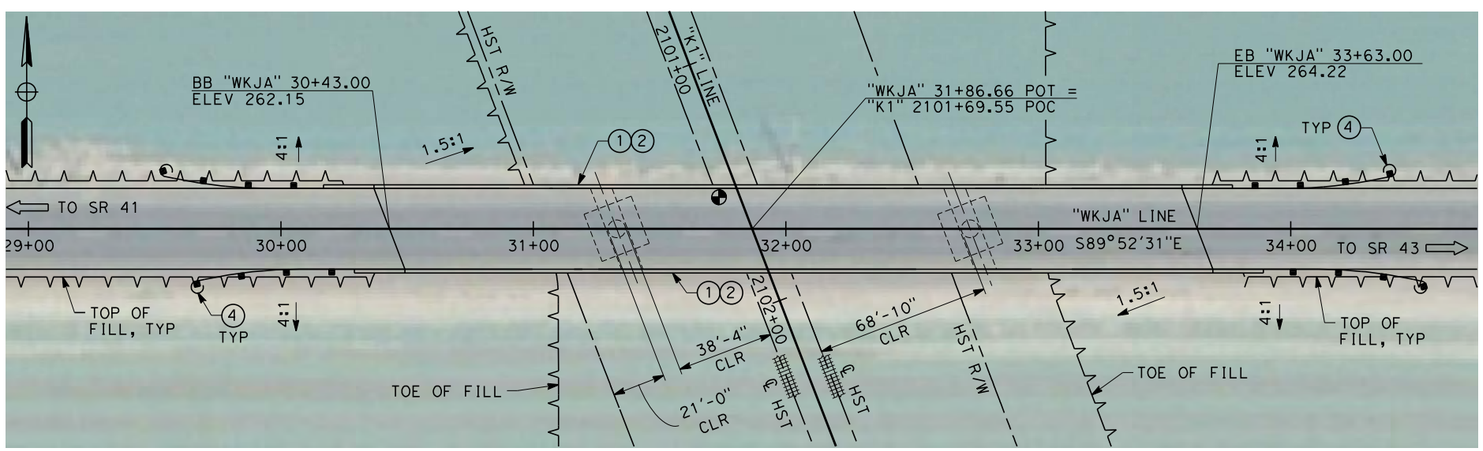

PLAN
SCALE: 1"=30'

NOTES:

1. ALL PILES NOT SHOWN
2. FOR MINIMUM VERTICAL CLEARANCES, HORIZONTAL CURVE DATA, AND DETAILS NOT SHOWN, SEE ROADWAY PLANS.

LEGEND:

1. CONCRETE BARRIER WITH AR FENCE
2. AR FENCE WITH SOLID PLATE OVER HST
3. FUTURE UTILITY ENCASEMENT OPENING
4. MBGR

10 0 10 20
1"=10'

30 0 30 60
1"=30'

REV	DATE	BY	CHK	APP	DESCRIPTION

DESIGNED BY B. LUSCOMBE
DRAWN BY D. BARNHART
CHECKED BY L. SMITH
IN CHARGE R. COFFIN
DATE 12/31/13

RECORD SET 15% DESIGN SUBMISSION - NOT FOR CONSTRUCTION

URS | HMM | ARUP
CALIFORNIA HIGH-SPEED TRAIN

CALIFORNIA HIGH-SPEED RAIL AUTHORITY

CALIFORNIA HIGH-SPEED TRAIN PROJECT
FRESNO TO BAKERSFIELD
KAWEAH SUBSECTION
ALIGNMENT K1
OVERHEAD PLANNING STUDY
JACKSON AVE

CONTRACT NO. HSR 06-0003
DRAWING NO. ST2320
SCALE AS SHOWN
SHEET NO. 2 OF 5

BAR50597 12/24/2013 9:06:31 AM CAHSRP-r1.tbl CHSR_PDF_half_black.pltc:\pwworking\hmm\external\bar50597\d0133777\FB-ST-2320-K1.dgn

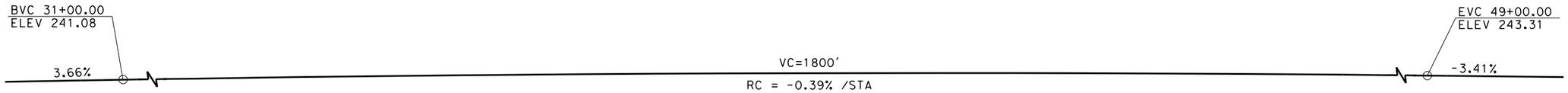

NOTE:
FOR NOTES AND LEGEND
SEE SHEET ST2322

PROFILE GRADE
NO SCALE

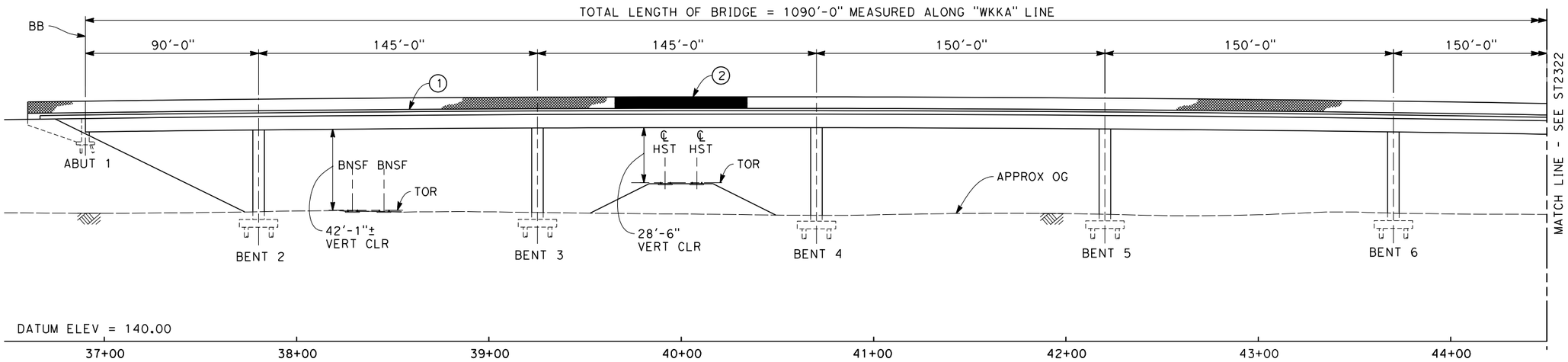

ELEVATION
SCALE: 1"=30'

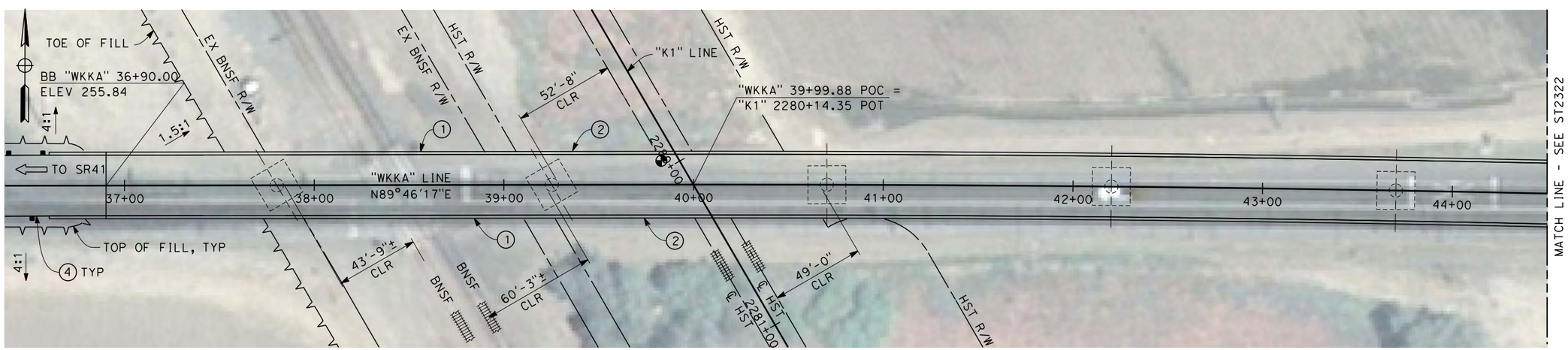

PLAN
SCALE: 1"=30'

30 0 30 60
1"=30'

REV	DATE	BY	CHK	APP	DESCRIPTION

DESIGNED BY B. LUSCOMBE
DRAWN BY D. BARNHART
CHECKED BY M. AMINI
IN CHARGE R. COFFIN
DATE 12/31/13

RECORD SET 15% DESIGN SUBMISSION - NOT FOR CONSTRUCTION

URS | HMM | ARUP
CALIFORNIA HIGH-SPEED TRAIN

CALIFORNIA HIGH-SPEED RAIL AUTHORITY

CALIFORNIA HIGH-SPEED TRAIN PROJECT
FRESNO TO BAKERSFIELD
KAWEAH SUBSECTION
ALIGNMENT K1
OVERHEAD PLANNING STUDY
KANSAS AVE

CONTRACT NO. HSR 06-0003
DRAWING NO. ST2321
SCALE AS SHOWN
SHEET NO. 3 OF 5

BAR50597 12/24/2013 9:01:20 AM CAHSRP-r1.tbl CHSR_PDF_half_black.pltc:\pwworking\hmm\external\bar50597\d0133777\FB-ST-2321-K1.dgn

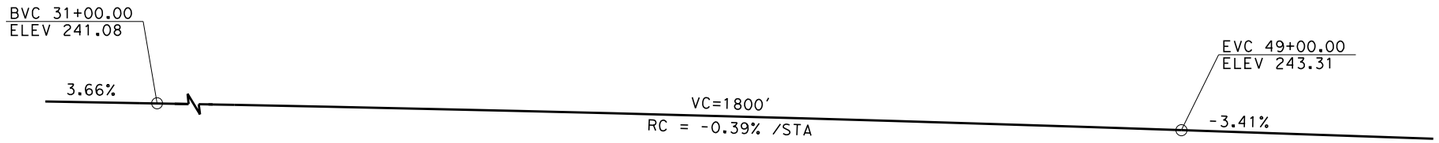

PROFILE GRADE
NO SCALE

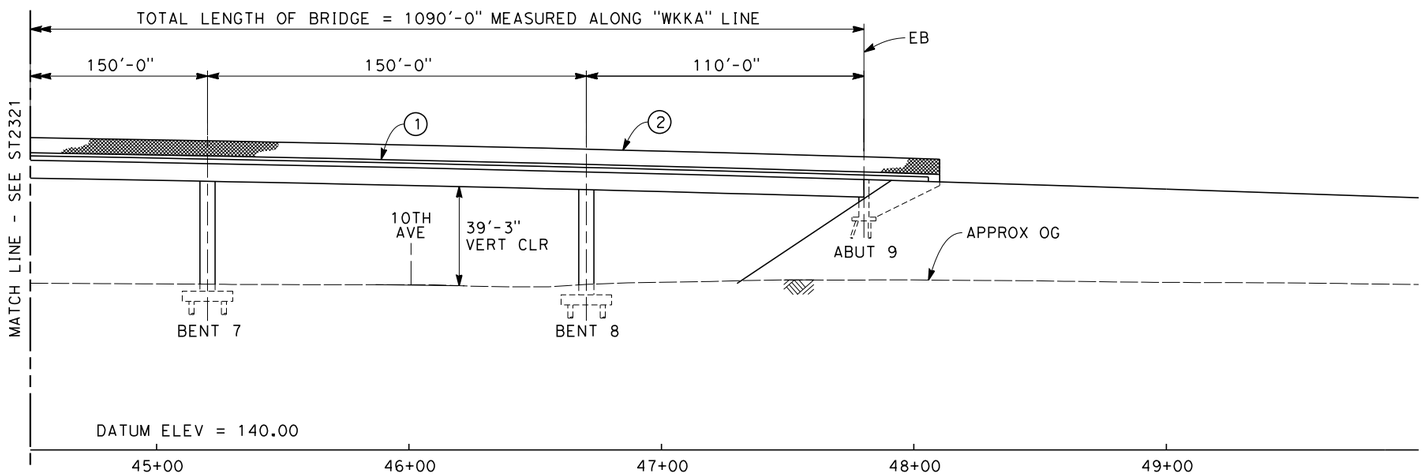

ELEVATION
SCALE: 1"=30'

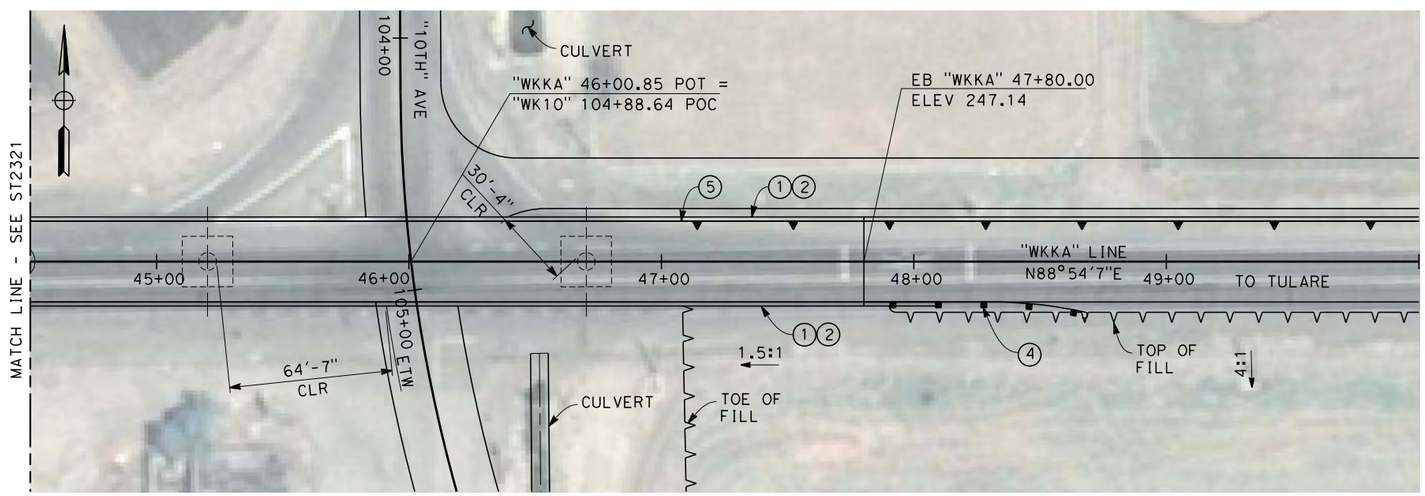

PLAN
SCALE: 1"=30'

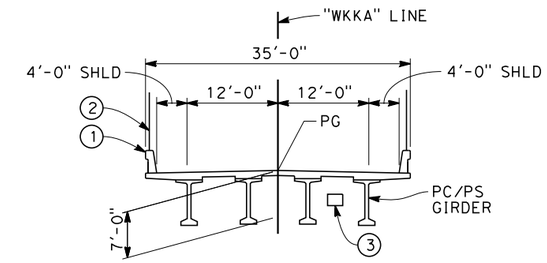

SECTION OVER BNSF

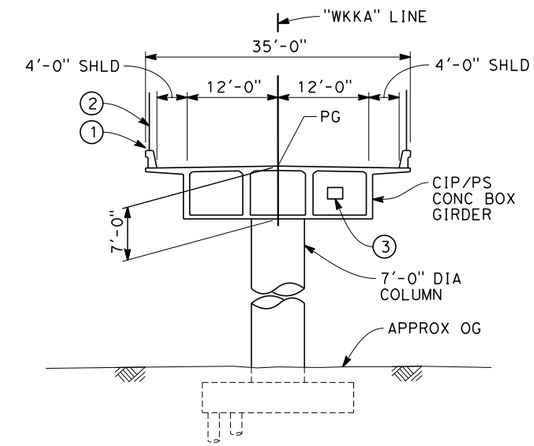

TYPICAL SECTION
SCALE: 1"=10'

NOTES:

1 ALL PILES NOT SHOWN

2 FOR MINIMUM VERTICAL CLEARANCESS, HORIZONTAL CURVE DATA, AND DETAILS NOT SHOWN, SEE ROADWAY PLAN.

LEGEND:

1. CONCRETE BARRIER WITH AR FENCE
2. AR FENCE WITH SOLID PLATE OVER HST
3. FUTURE UTILITY ENCASEMENT OPENING
4. MBGR
5. RETAINING WALL

10 0 10 20 — 1"=10'

30 0 30 60 — 1"=30'

REV	DATE	BY	CHK	APP	DESCRIPTION

DESIGNED BY B. LUSCOMBE
DRAWN BY D. BARNHART
CHECKED BY M. AMINI
IN CHARGE R. COFFIN
DATE 12/31/13

RECORD SET 15% DESIGN SUBMISSION - NOT FOR CONSTRUCTION

URS | HMM | ARUP — CALIFORNIA HIGH-SPEED TRAIN

CALIFORNIA HIGH-SPEED RAIL AUTHORITY

CALIFORNIA HIGH-SPEED TRAIN PROJECT
FRESNO TO BAKERSFIELD
KAWEAH SUBSECTION
ALIGNMENT K1
OVERHEAD PLANNING STUDY
KANSAS AVE

CONTRACT NO. HSR 06-0003
DRAWING NO. ST2322
SCALE AS SHOWN
SHEET NO. 4 OF 5

BAR50597 12/24/2013 9:04:13 AM CAHSRP-r1.tbl CHSR_PDF_half_black.pltcf:\pwworking\hmm\external\bar50597\d0133777\FB-ST-2322-K1.dgn

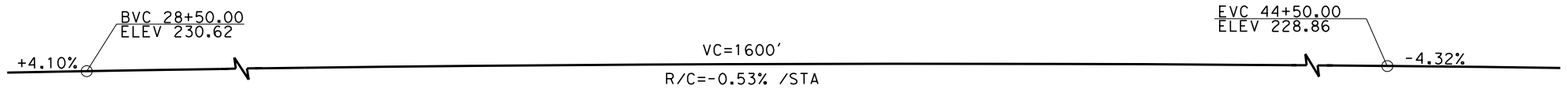

PROFILE GRADE
NO SCALE

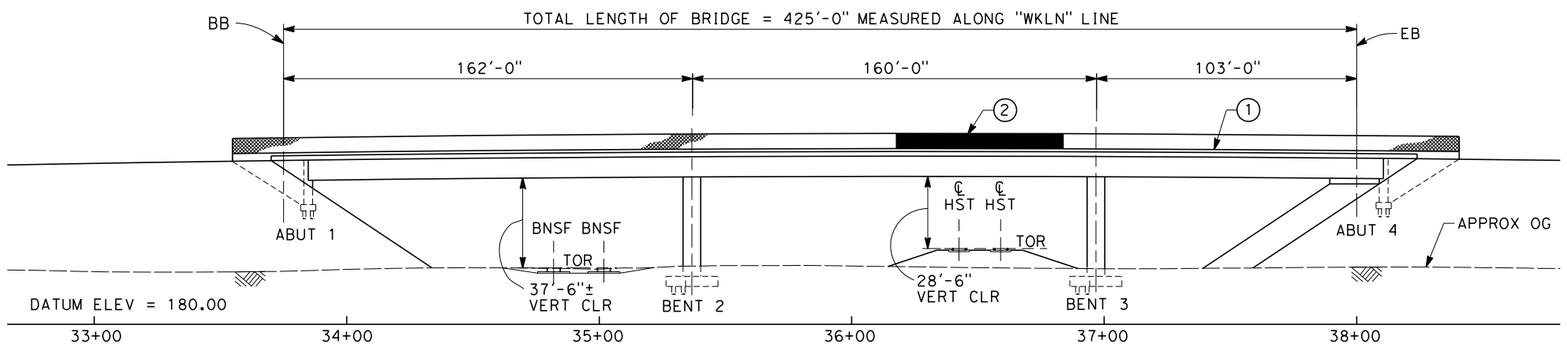

ELEVATION
SCALE: 1"=30'

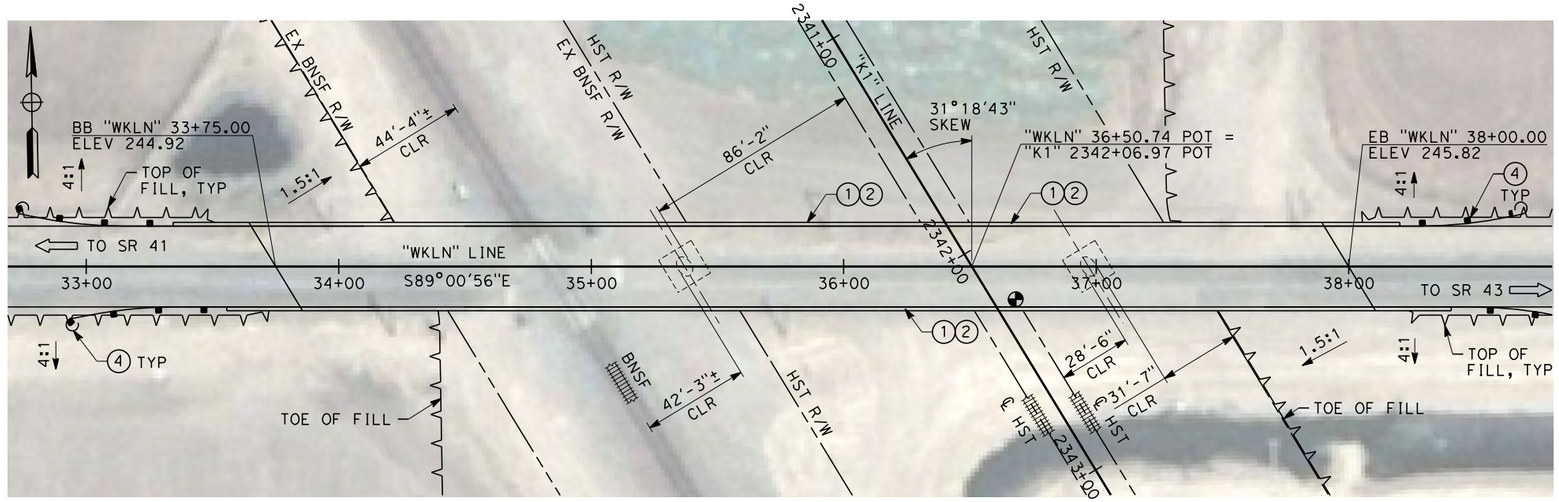

PLAN
SCALE: 1"=30'

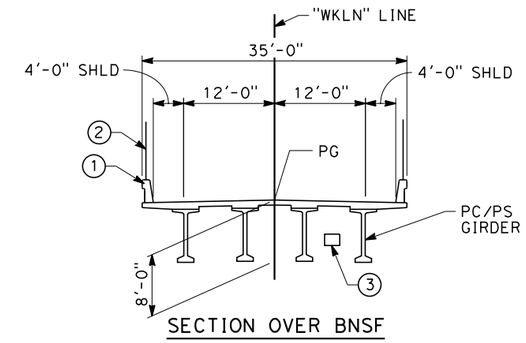

SECTION OVER BNSF

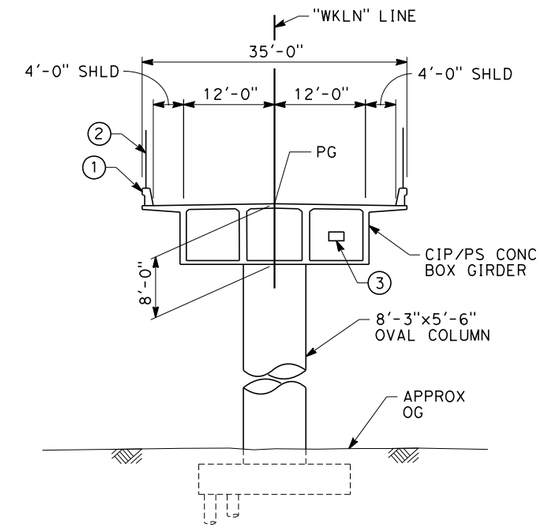

TYPICAL SECTIONS
SCALE: 1"=10'

NOTES:

1. ALL PILES NOT SHOWN
2. FOR MINIMUM VERTICAL CLEARANCES, HORIZONTAL CURVE DATA, AND DETAILS NOT SHOWN, SEE ROADWAY PLANS.

LEGEND:

1. CONCRETE BARRIER WITH AR FENCE
2. AR FENCE WITH SOLID PLATE OVER HST
3. FUTURE UTILITY ENCASEMENT OPENING
4. MBGR

10 0 10 20
1"=10'

30 0 30 60
1"=30'

REV	DATE	BY	CHK	APP	DESCRIPTION

DESIGNED BY B. LUSCOMBE
DRAWN BY D. BARNHART
CHECKED BY L. SMITH
IN CHARGE R. COFFIN
DATE 12/31/13

RECORD SET 15% DESIGN SUBMISSION - NOT FOR CONSTRUCTION

URS | HMM | ARUP
CALIFORNIA HIGH-SPEED TRAIN

CALIFORNIA HIGH-SPEED RAIL AUTHORITY

CALIFORNIA HIGH-SPEED TRAIN PROJECT
FRESNO TO BAKERSFIELD
KAWEAH SUBSECTION
ALIGNMENT K1
OVERHEAD PLANNING STUDY
LANSING AVE

CONTRACT NO. HSR 06-0003
DRAWING NO. ST2323
SCALE AS SHOWN
SHEET NO. 5 OF 5

BAR50597 12/24/2013 8:58:04 AM CAHSRP-r1.tbl CHSR_PDF_half_black.pltc:\pwworking\hmm\external\bar50597\d0133777\FB-ST-2323-K1.dgn

REV	DATE	BY	CHK	APP	DESCRIPTION

DESIGNED BY B. LUSCOMBE
DRAWN BY D. BARNHART
CHECKED BY M. ANDREWS
IN CHARGE R. COFFIN
DATE 12/31/13

RECORD SET 15% DESIGN SUBMISSION - NOT FOR CONSTRUCTION

URS | HMM | ARUP
CALIFORNIA HIGH-SPEED TRAIN

CALIFORNIA
HIGH-SPEED RAIL AUTHORITY

CALIFORNIA HIGH-SPEED TRAIN PROJECT
FRESNO TO BAKERSFIELD

KAWEAH SUBSECTION
ALIGNMENT K2
OVERHEAD PLANNING STUDY
KEY MAP

CONTRACT NO. HSR 06-0003
DRAWING NO. SB0057
SCALE AS SHOWN
SHEET NO. 1 OF 4

AND52110 12/20/2013 3:11:30 PM CAHSRP-r1.tbl CHSR_PDF_half_black.pltc:\pwworking\hmm\external\and52110\dms91107\FB-SB-0057-K2.dgn

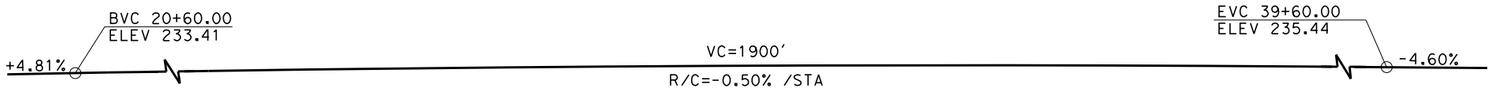

PROFILE GRADE
NO SCALE

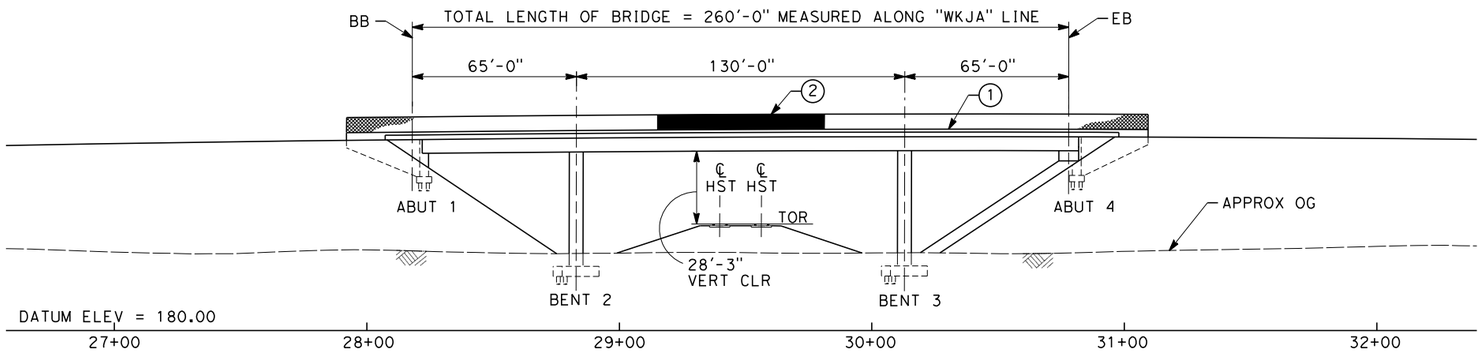

ELEVATION
SCALE: 1"=30'

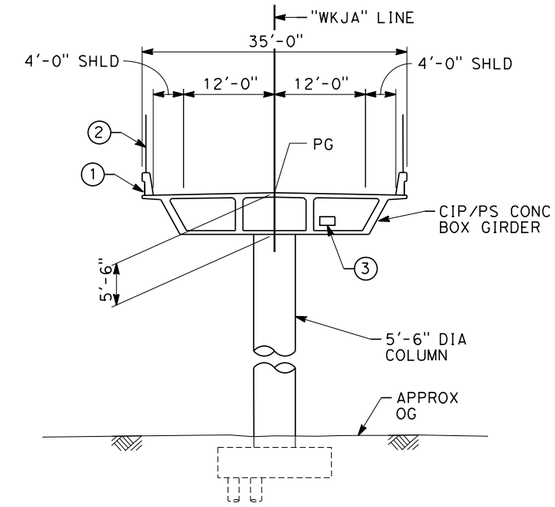

TYPICAL SECTION
SCALE: 1"=10'

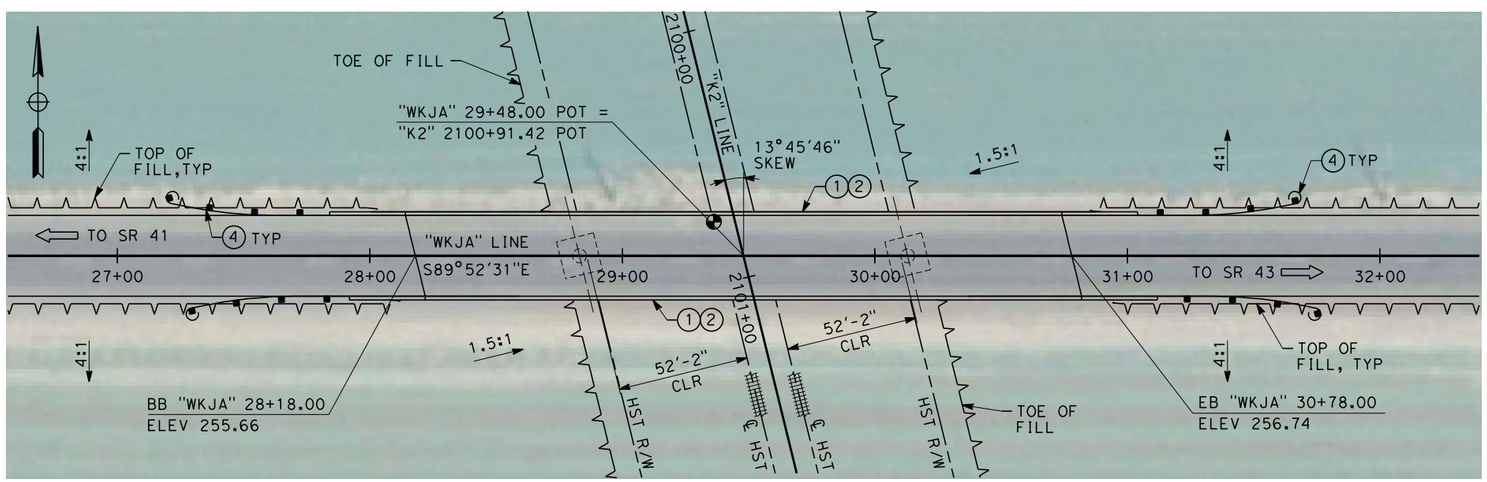

PLAN
SCALE: 1"=30'

NOTES:

1. ALL PILES NOT SHOWN
2. FOR MINIMUM VERTICAL CLEARANCES, HORIZONTAL CURVE DATA, AND DETAILS NOT SHOWN, SEE ROADWAY PLANS.

LEGEND:

1. CONCRETE BARRIER WITH AR FENCE
2. AR FENCE WITH SOLID PLATE OVER HST
3. FUTURE UTILITY ENCASEMENT OPENING
4. MBGR

10 0 10 20
1"=10'

30 0 30 60
1"=30'

REV	DATE	BY	CHK	APP	DESCRIPTION

DESIGNED BY B. LUSCOMBE
DRAWN BY D. BARNHART
CHECKED BY M. ANDREWS
IN CHARGE R. COFFIN
DATE 12/31/13

RECORD SET 15% DESIGN SUBMISSION - NOT FOR CONSTRUCTION

URS | HMM | ARUP
CALIFORNIA HIGH-SPEED TRAIN

CALIFORNIA HIGH-SPEED RAIL AUTHORITY

CALIFORNIA HIGH-SPEED TRAIN PROJECT
FRESNO TO BAKERSFIELD
KAWEAH SUBSECTION
ALIGNMENT K2
OVERHEAD PLANNING STUDY
JACKSON AVE

CONTRACT NO. HSR 06-0003
DRAWING NO. ST2330
SCALE AS SHOWN
SHEET NO. 2 OF 4

AND52110 12/20/2013 3:20:15 PM CAHSRP-r1.tbl CHSR_PDF_half_black.plt c:\pwworking\hmm\external\and52110\dms91107\FB-ST-2330-K2.dgn

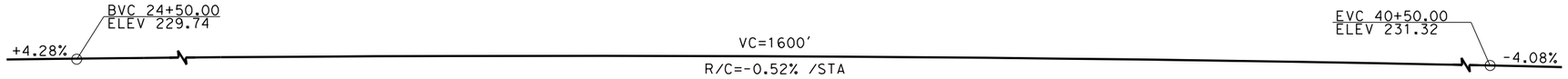

PROFILE GRADE
NO SCALE

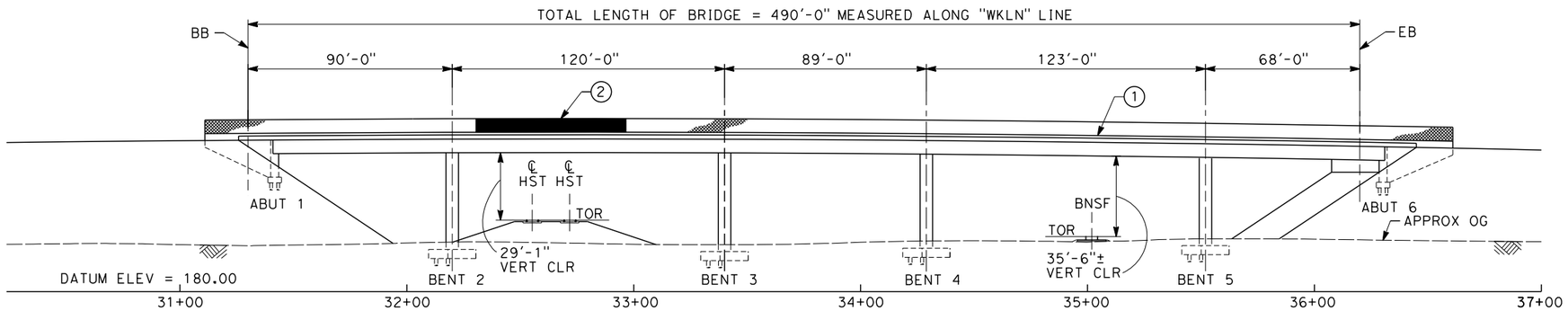

ELEVATION
SCALE: 1"=30'

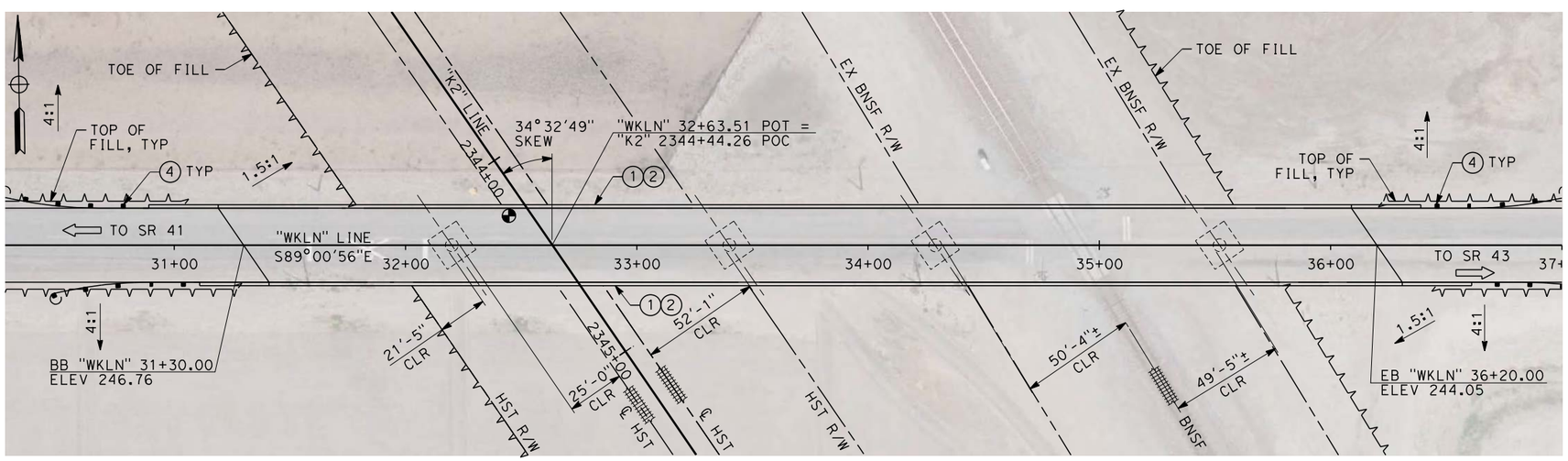

PLAN
SCALE: 1"=30'

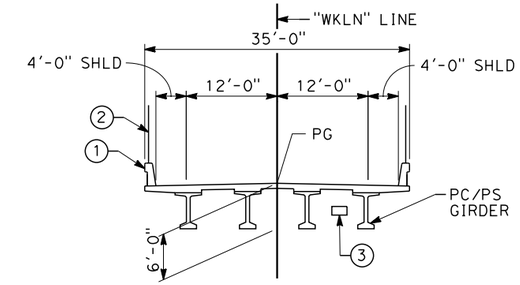

SECTION OVER BNSF

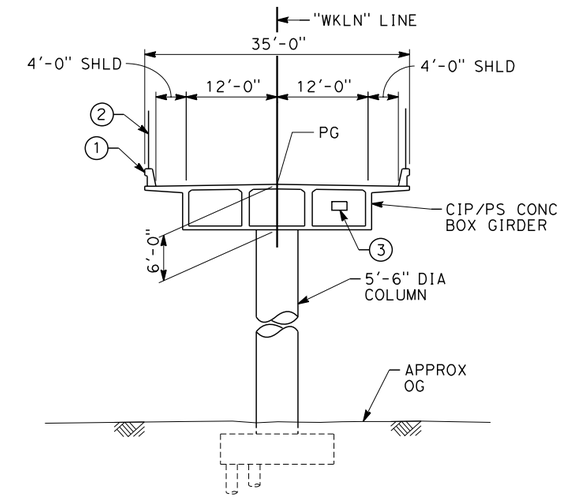

TYPICAL SECTION
SCALE: 1"=10'

NOTES:
1. ALL PILES NOT SHOWN
2. FOR MINIMUM VERTICAL CLEARANCES, HORIZONTAL CURVE DATA, AND DETAILS NOT SHOWN, SEE ROADWAY PLANS.

LEGEND:
1. CONCRETE BARRIER WITH AR FENCE
2. AR FENCE WITH SOLID PLATE OVER HST
3. FUTURE UTILITY ENCASEMENT OPENING
4. MBGR

10 0 10 20 — 1"=10'

30 0 30 60 — 1"=30'

REV	DATE	BY	CHK	APP	DESCRIPTION

DESIGNED BY B. LUSCOMBE
DRAWN BY D. BARNHART
CHECKED BY M. ANDREWS
IN CHARGE R. COFFIN
DATE 12/31/13

RECORD SET 15% DESIGN SUBMISSION - NOT FOR CONSTRUCTION

URS | HMM | ARUP
CALIFORNIA HIGH-SPEED TRAIN

CALIFORNIA HIGH-SPEED RAIL AUTHORITY

CALIFORNIA HIGH-SPEED TRAIN PROJECT
FRESNO TO BAKERSFIELD
KAWEAH SUBSECTION
ALIGNMENT K2
OVERHEAD PLANNING STUDY
LANSING AVE

CONTRACT NO. HSR 06-0003
DRAWING NO. ST2331
SCALE AS SHOWN
SHEET NO. 3 OF 4

BAR59603 12/22/2013 4:06:38 AM CAHSRP-r1.tbl CHSR_PDF_half_black_200.pdf working\hmm\external\bar59603\dms91107\FB-ST-2331-K2.dgn

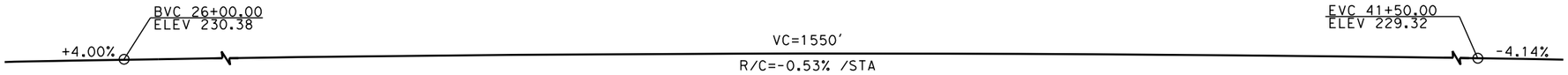

PROFILE GRADE
NO SCALE

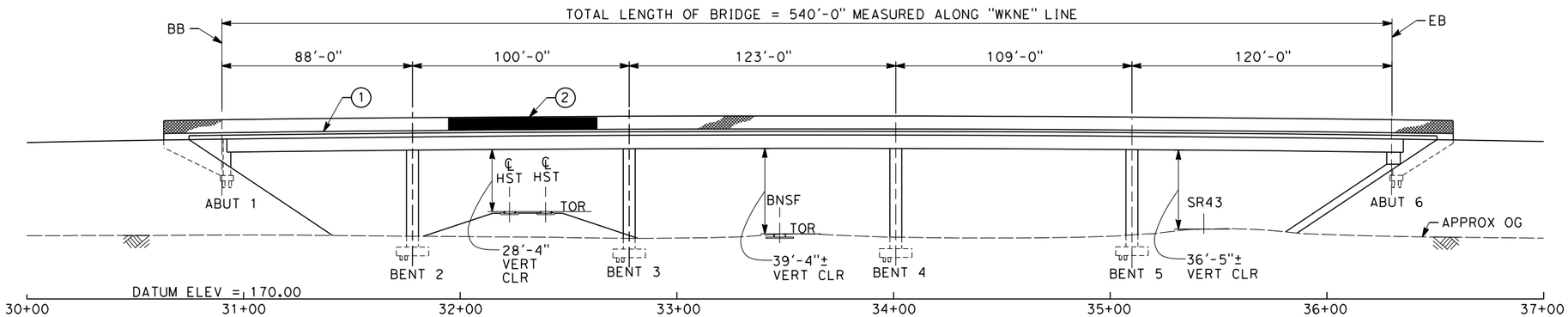

ELEVATION
SCALE: 1"=30'

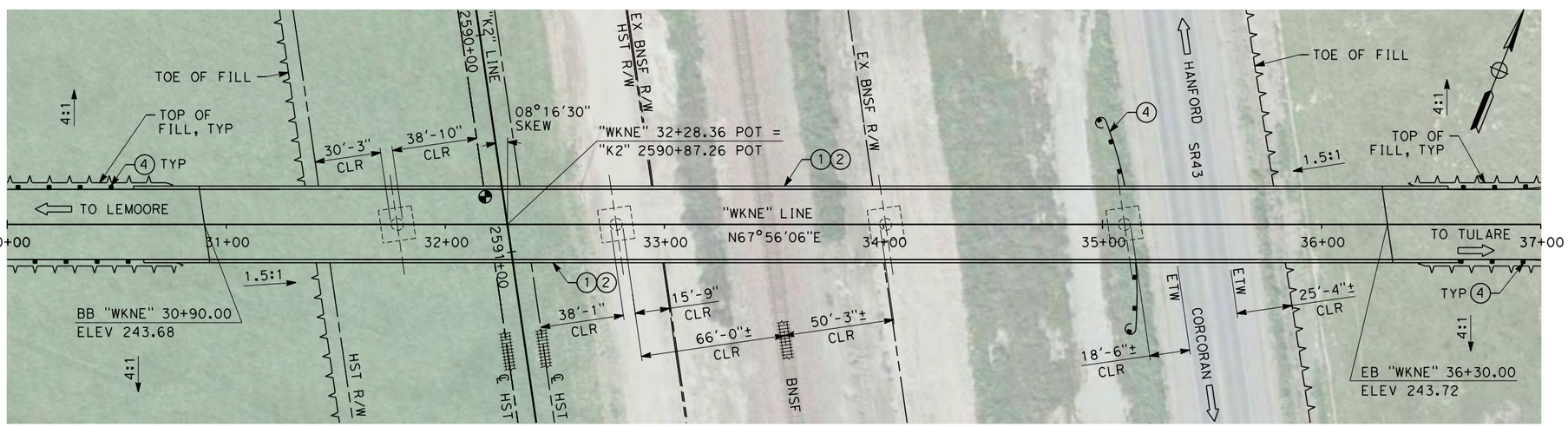

PLAN
SCALE: 1"=30'

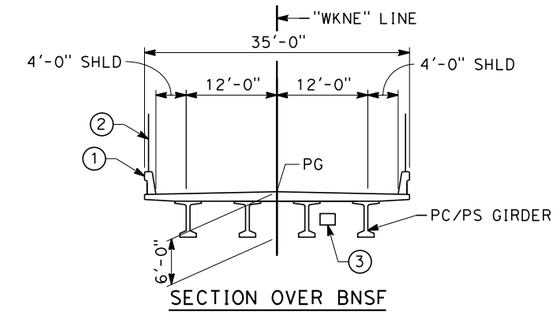

SECTION OVER BNSF

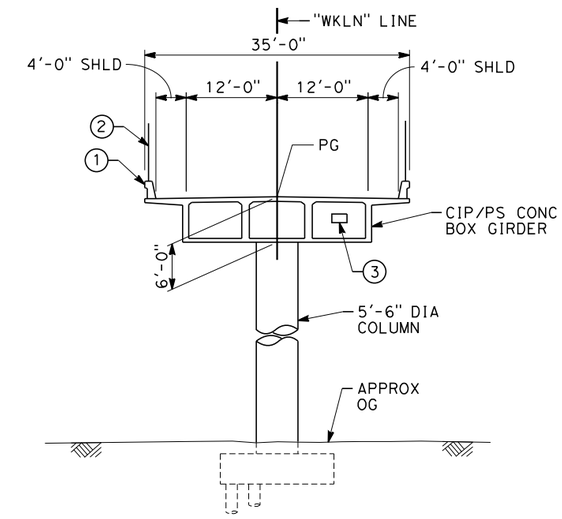

TYPICAL SECTION
SCALE: 1"=10'

NOTES:

1. ALL PILES NOT SHOWN
2. FOR MINIMUM VERTICAL CLEARANCES, HORIZONTAL CURVE DATA, AND DETAILS NOT SHOWN, SEE ROADWAY PLANS.

LEGEND:

1. CONCRETE BARRIER WITH AR FENCE
2. AR FENCE WITH SOLID PLATE OVER HST
3. FUTURE UTILITY ENCASEMENT OPENING
4. MBGR

10 0 10 20 — 1"=10'

30 0 30 60 — 1"=30'

REV	DATE	BY	CHK	APP	DESCRIPTION

DESIGNED BY B. LUSCOMBE
DRAWN BY D. BARNHART
CHECKED BY M. ANDREWS
IN CHARGE R. COFFIN
DATE 12/31/13

RECORD SET 15% DESIGN SUBMISSION - NOT FOR CONSTRUCTION

URS | HMM | ARUP
CALIFORNIA HIGH-SPEED TRAIN

CALIFORNIA HIGH-SPEED RAIL AUTHORITY

CALIFORNIA HIGH-SPEED TRAIN PROJECT
FRESNO TO BAKERSFIELD
KAWEAH SUBSECTION
ALIGNMENT K2
OVERHEAD PLANNING STUDY
NEVADA AVE

CONTRACT NO. HSR 06-0003
DRAWING NO. ST2332
SCALE AS SHOWN
SHEET NO. 4 OF 4

AND52110 12/20/2013 3:37:32 PM CAHSRP-r1.tbl CHSR_PDF_half_black.pltc:\pwworking\hmm\external\and52110\dms91107\FB-ST-2332-K2.dgn

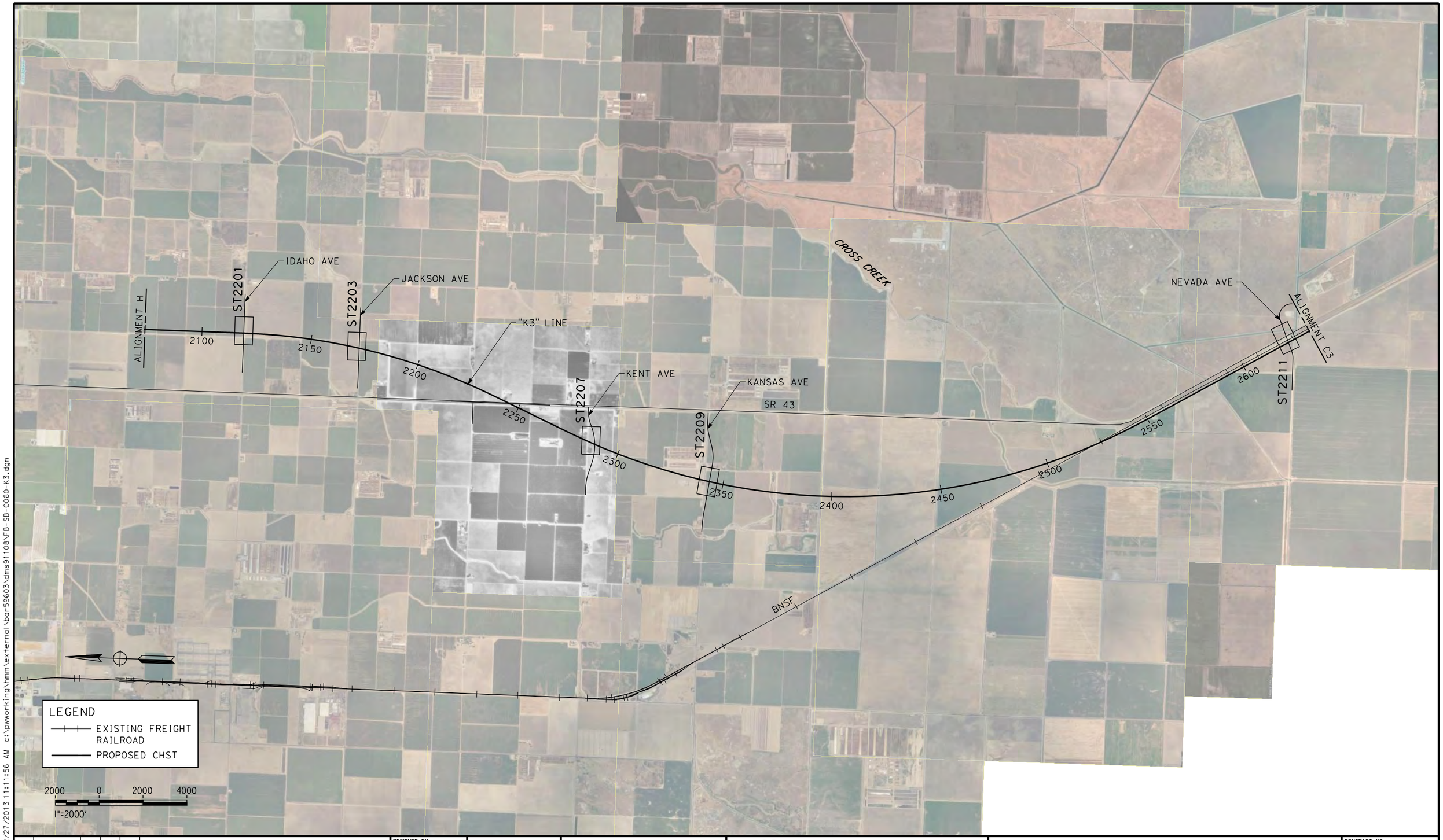

12/27/2013 11:11:56 AM c:\pwworking\hmm\external\bar59603\dms91108\FB-SB-0060-K3.dgn

BAR59603

REV	DATE	BY	CHK	APP	DESCRIPTION

DESIGNED BY E. MORAN
DRAWN BY D. BARNHART
CHECKED BY M. ANDREWS
IN CHARGE R. COFFIN
DATE 12/31/13

RECORD SET 15% DESIGN SUBMISSION - NOT FOR CONSTRUCTION

URS | HMM | ARUP
CALIFORNIA HIGH-SPEED TRAIN

CALIFORNIA HIGH-SPEED RAIL AUTHORITY

CALIFORNIA HIGH-SPEED TRAIN PROJECT
FRESNO TO BAKERSFIELD
KAWEAH SUBSECTION
ALIGNMENT K3
OVERHEAD PLANNING STUDY
KEY MAP

CONTRACT NO. HSR 06-0003
DRAWING NO. SB0060
SCALE AS SHOWN
SHEET NO. 1 OF 6

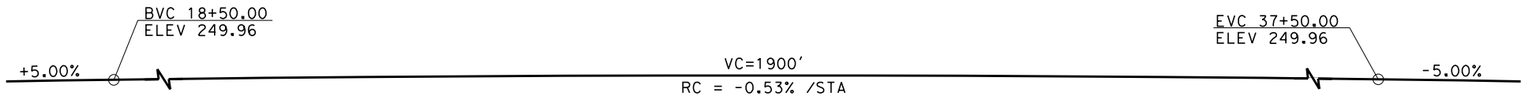

PROFILE GRADE
NO SCALE

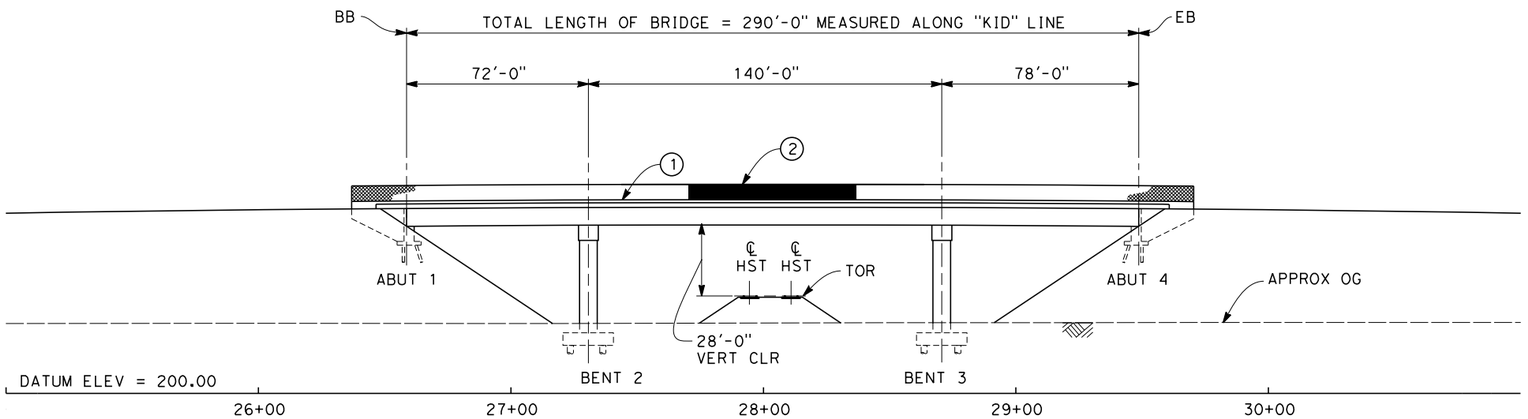

ELEVATION
SCALE: 1"=30'

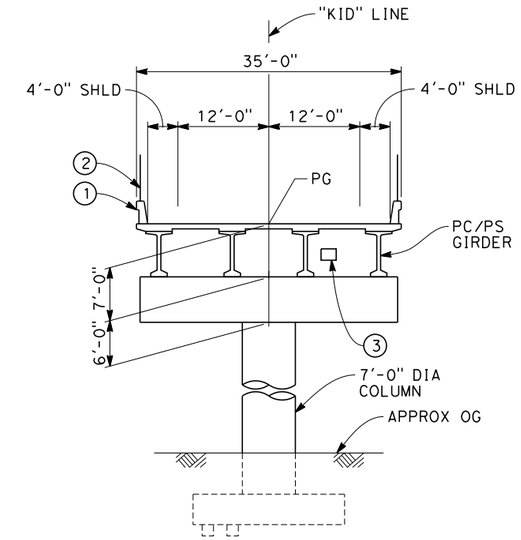

TYPICAL SECTION
SCALE 1'=10'

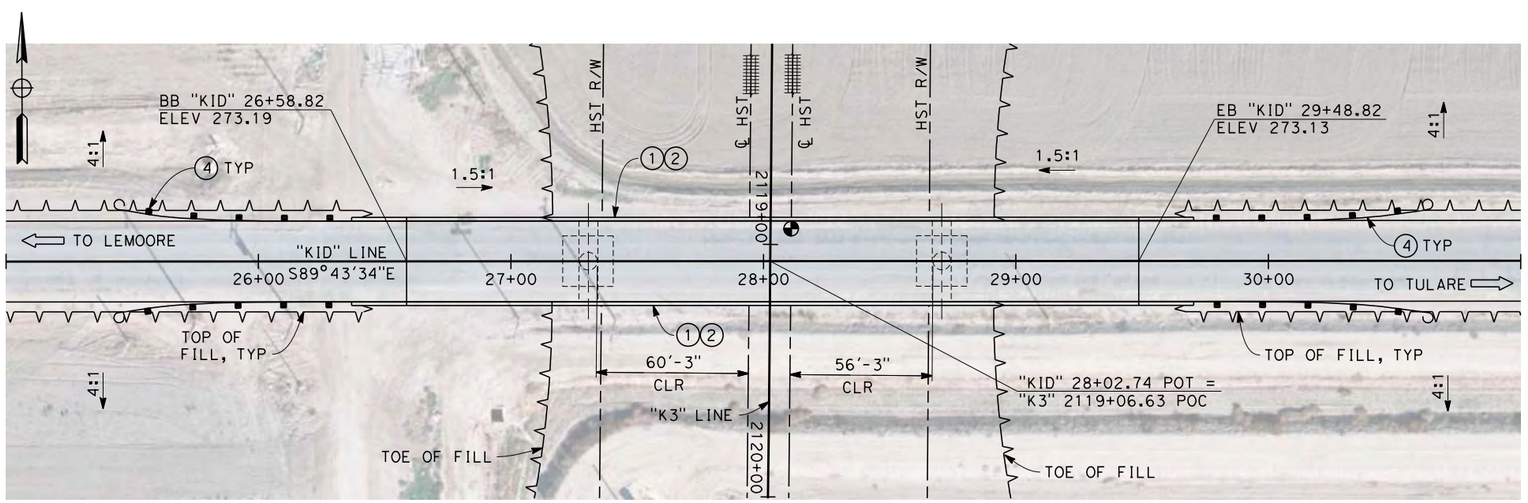

PLAN
SCALE: 1"=30'

NOTES:

1. ALL PILES NOT SHOWN
2. FOR MINIMUM VERTICAL CLEARANCES, HORIZONTAL CURVE DATA, AND DETAILS NOT SHOWN, SEE ROADWAY PLANS.

LEGEND:

1. CONCRETE BARRIER WITH AR FENCE
2. AR FENCE WITH SOLID PLATE OVER HST
3. FUTURE UTILITY ENCASEMENT OPENING
4. MBGR

10 0 10 20 — 1"=10'

30 0 30 60 — 1"=30'

REV	DATE	BY	CHK	APP	DESCRIPTION

DESIGNED BY E. MORAN
DRAWN BY D. BARNHART
CHECKED BY M. ANDREWS
IN CHARGE R. COFFIN
DATE 12/31/13

RECORD SET 15% DESIGN SUBMISSION - NOT FOR CONSTRUCTION

URS | HMM | ARUP
CALIFORNIA HIGH-SPEED TRAIN

CALIFORNIA HIGH-SPEED RAIL AUTHORITY

CALIFORNIA HIGH-SPEED TRAIN PROJECT
FRESNO TO BAKERSFIELD
KAWEAH SUBSECTION
ALIGNMENT K3
OVERHEAD PLANNING STUDY
IDAHO AVE

CONTRACT NO. HSR 06-0003
DRAWING NO. ST2201
SCALE AS SHOWN
SHEET NO. 2 OF 6

12/27/2013 10:32:16 AM c:\pwworking\hmm\external\pro39009\dms91108\FB-ST-2201-K3.dgn
Clark

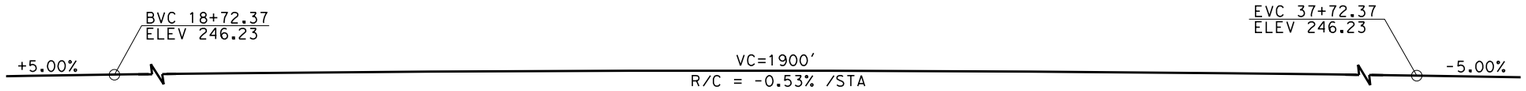

PROFILE GRADE
NO SCALE

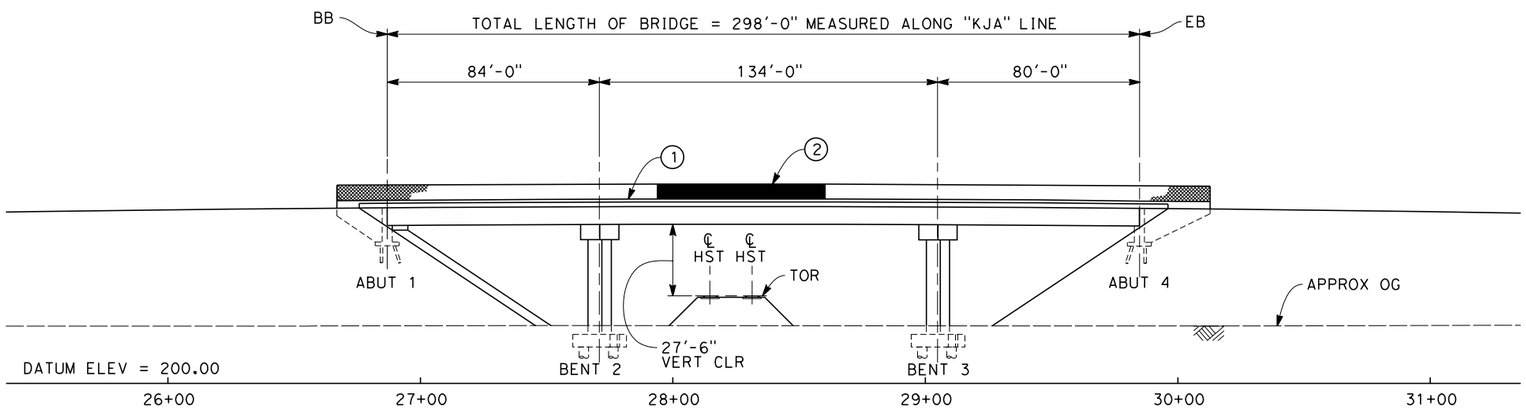

ELEVATION
SCALE: 1"=30'

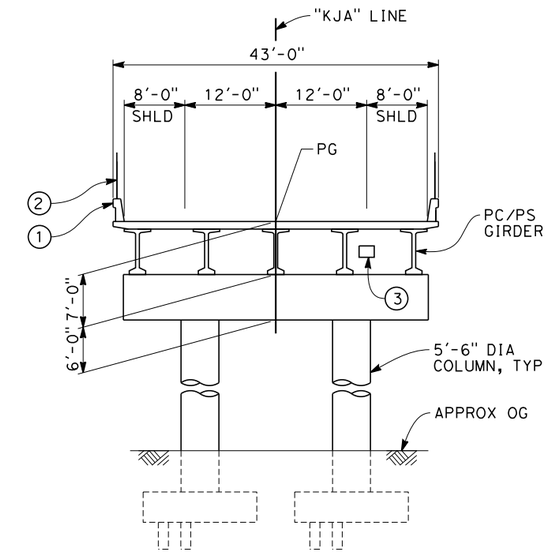

TYPICAL SECTION
SCALE: 1"=10'

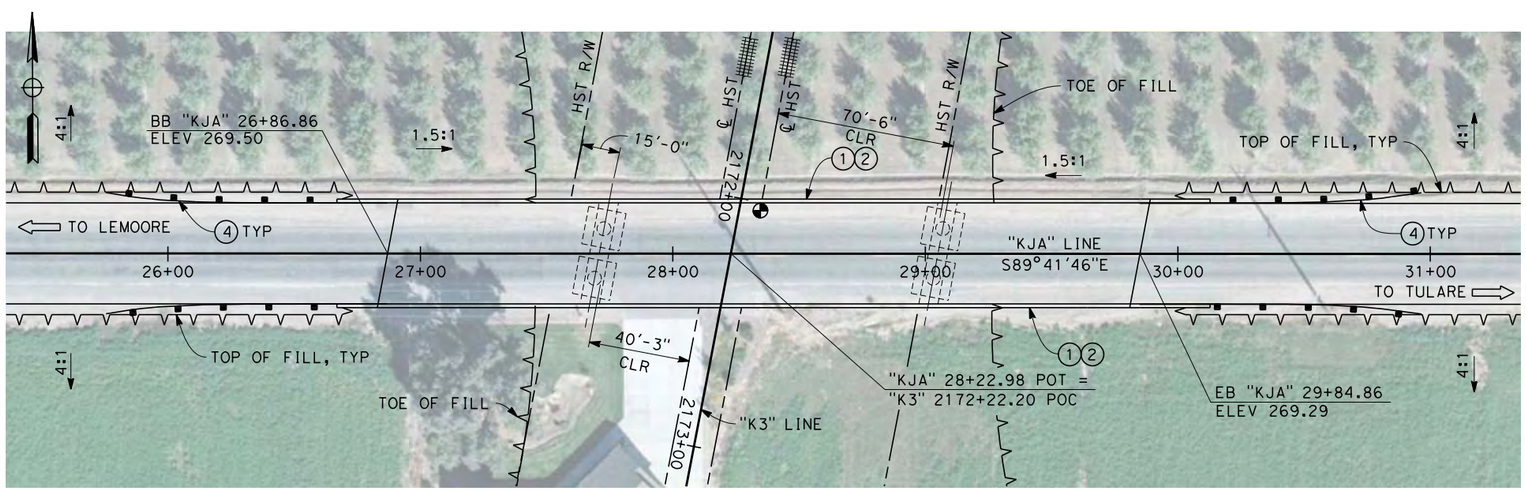

PLAN
SCALE: 1"=30'

NOTES:

1. ALL PILES NOT SHOWN
2. FOR MINIMUM VERTICAL CLEARANCES, HORIZONTAL CURVE DATA, AND DETAILS NOT SHOWN, SEE ROADWAY PLANS.

LEGEND:

1. CONCRETE BARRIER WITH AR FENCE
2. AR FENCE WITH SOLID PLATE OVER HST
3. FUTURE UTILITY ENCASEMENT OPENING
4. MBGR

10 0 10 20 — 1"=10'

30 0 30 60 — 1"=30'

REV	DATE	BY	CHK	APP	DESCRIPTION

DESIGNED BY E. MORAN
DRAWN BY D. BARNHART
CHECKED BY M. ANDREWS
IN CHARGE R. COFFIN
DATE 12/31/13

RECORD SET 15% DESIGN SUBMISSION - NOT FOR CONSTRUCTION

URS | HMM | ARUP
CALIFORNIA HIGH-SPEED TRAIN

CALIFORNIA HIGH-SPEED RAIL AUTHORITY

CALIFORNIA HIGH-SPEED TRAIN PROJECT
FRESNO TO BAKERSFIELD
KAWEAH SUBSECTION
ALIGNMENT K3
OVERHEAD PLANNING STUDY
JACKSON AVE

CONTRACT NO. HSR 06-0003
DRAWING NO. ST2203
SCALE AS SHOWN
SHEET NO. 3 OF 6

12/24/2013 9:59:05 AM c:\pwworking\hmm\xexternal\bar50597\dms91108\FB-ST-2203-K3.dgn
BAR50597

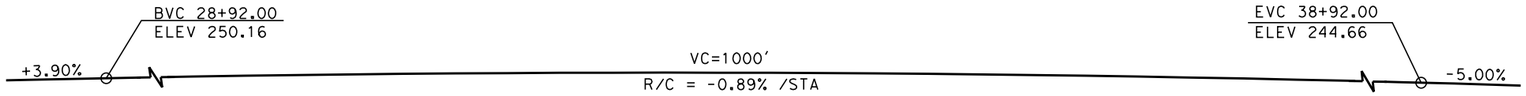

PROFILE GRADE
NO SCALE

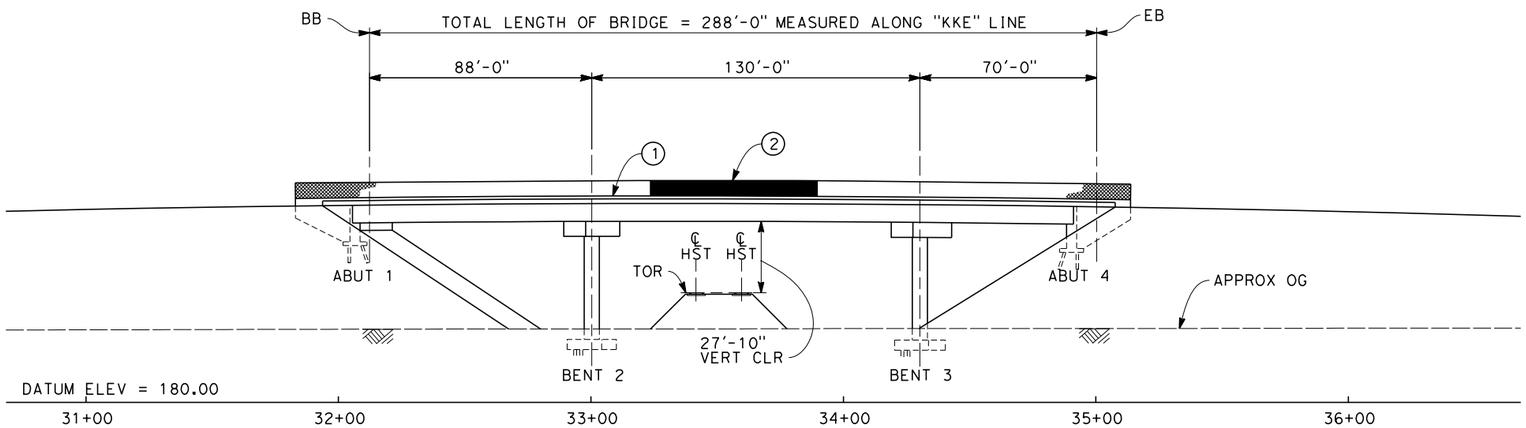

ELEVATION
SCALE: 1"=30'

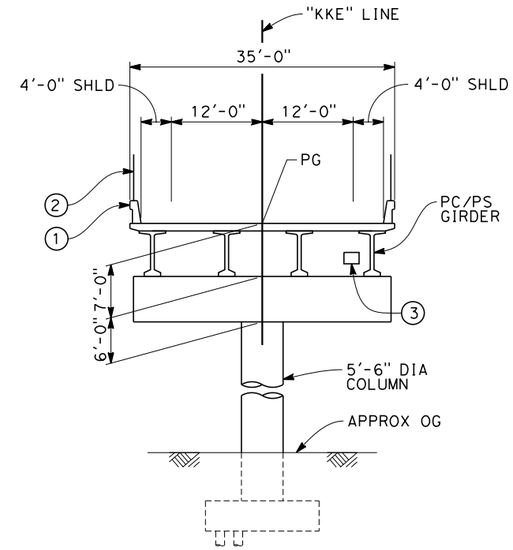

TYPICAL SECTION
SCALE: 1"=10'

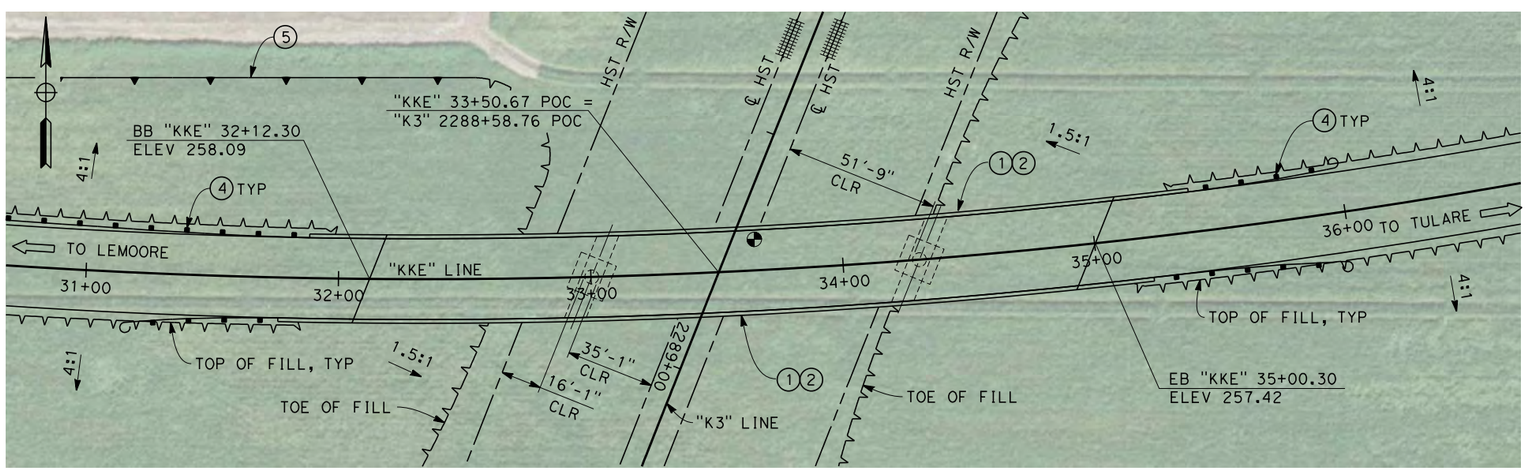

PLAN
SCALE: 1"=30'

NOTES:
1. ALL PILES NOT SHOWN
2. FOR MINIMUM VERTICAL CLEARANCES, HORIZONTAL CURVE DATA, AND DETAILS NOT SHOWN, SEE ROADWAY PLANS.

LEGEND:
1. CONCRETE BARRIER WITH AR FENCE
2. AR FENCE WITH SOLID PLATE OVER HST
3. FUTURE UTILITY ENCASEMENT OPENING
4. MBGR
5. RETAINING WALL

10 0 10 20 — 1"=10'
30 0 30 60 — 1"=30'

REV	DATE	BY	CHK	APP	DESCRIPTION

DESIGNED BY E. MORAN
DRAWN BY D. BARNHART
CHECKED BY M. ANDRWERS
IN CHARGE R. COFFIN
DATE 12/31/13

RECORD SET 15% DESIGN SUBMISSION - NOT FOR CONSTRUCTION

URS | HMM | ARUP
CALIFORNIA HIGH-SPEED TRAIN

CALIFORNIA HIGH-SPEED RAIL AUTHORITY

CALIFORNIA HIGH-SPEED TRAIN PROJECT
FRESNO TO BAKERSFIELD
KAWEAH SUBSECTION
ALIGNMENT K3
OVERHEAD PLANNING STUDY
KENT AVE

CONTRACT NO. HSR 06-0003
DRAWING NO. ST2207
SCALE AS SHOWN
SHEET NO. 4 OF 6

12/24/2013 10:09:08 AM c:\pwworking\hmm\external\bar50597\dms91108\FB-ST-2207-K3.dgn
BAR50597

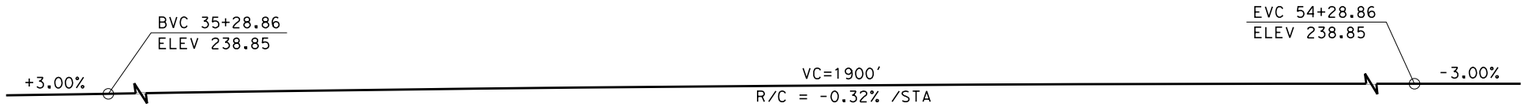

PROFILE GRADE
NO SCALE

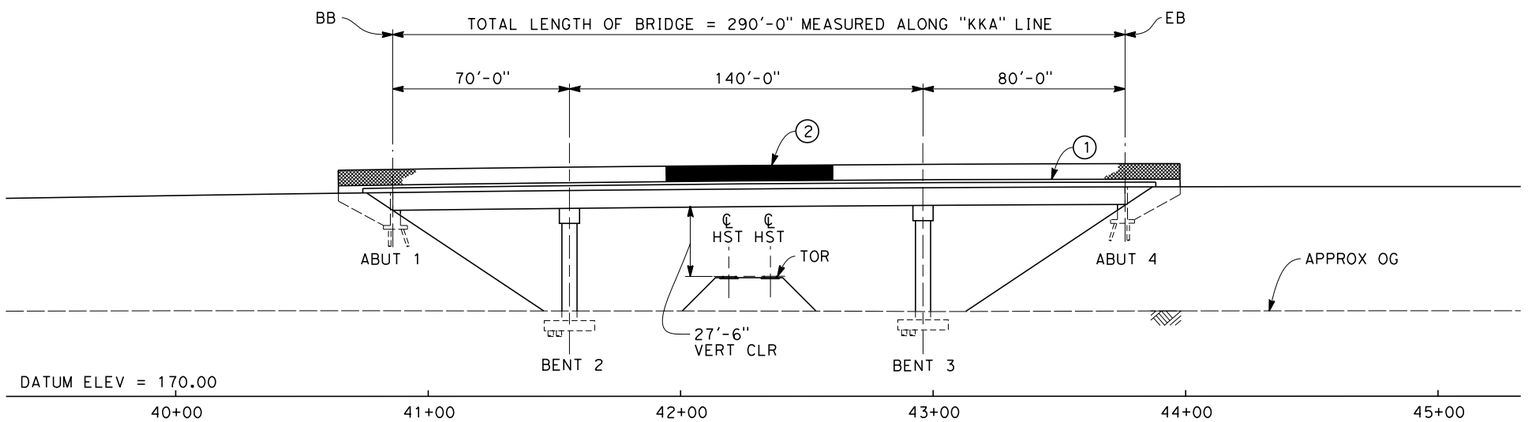

ELEVATION
SCALE: 1"=30'

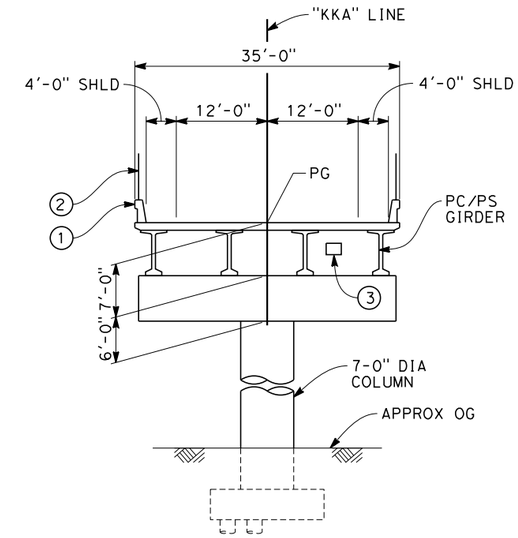

TYPICAL SECTION
SCALE: 1"=10'

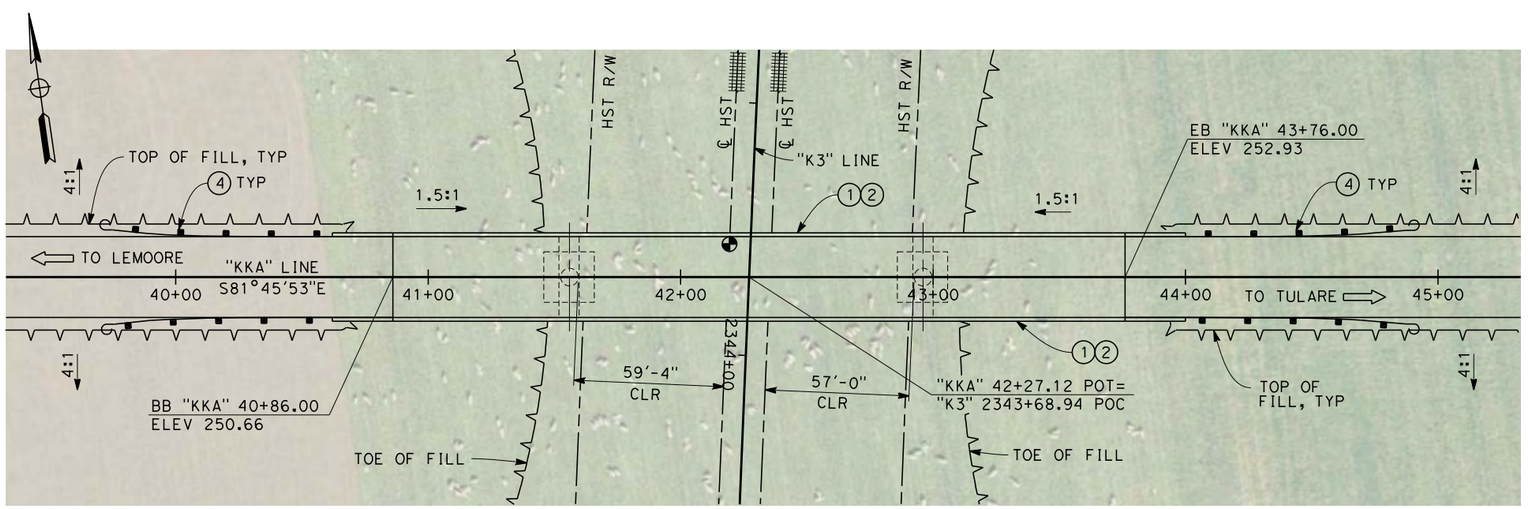

PLAN
SCALE: 1"=30'

NOTES:

1. ALL PILES NOT SHOWN
2. FOR MINIMUM VERTICAL CLEARANCES, HORIZONTAL CURVE DATA, AND DETAILS NOT SHOWN, SEE ROADWAY PLANS.

LEGEND:

1. CONCRETE BARRIER WITH AR FENCE
2. AR FENCE WITH SOLID PLATE OVER HST
3. FUTURE UTILITY ENCASEMENT OPENING
4. MBGR

10 0 10 20 — 1"=10'

30 0 30 60 — 1"=30'

REV	DATE	BY	CHK	APP	DESCRIPTION

DESIGNED BY E. MORAN
DRAWN BY D. BARNHART
CHECKED BY M. ANDREWS
IN CHARGE R. COFFIN
DATE 12/31/13

RECORD SET 15% DESIGN SUBMISSION - NOT FOR CONSTRUCTION

URS | HMM | ARUP
CALIFORNIA HIGH-SPEED TRAIN

CALIFORNIA HIGH-SPEED RAIL AUTHORITY

CALIFORNIA HIGH-SPEED TRAIN PROJECT
FRESNO TO BAKERSFIELD
KAWEAH SUBSECTION
ALIGNMENT K3
OVERHEAD PLANNING STUDY
KANSAS AVE

CONTRACT NO. HSR 06-0003
DRAWING NO. ST2209
SCALE AS SHOWN
SHEET NO. 5 OF 6

BAR50597 12/24/2013 10:23:23 AM c:\pwworking\hmm\external\bar50597\dms91108\FB-ST-2209-K3.dgn

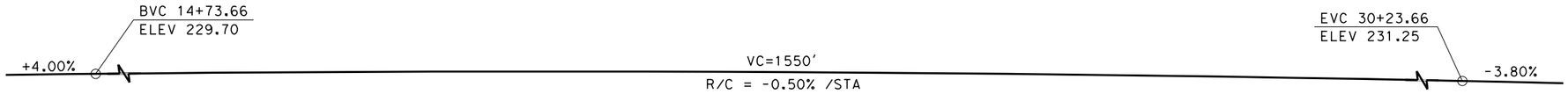

PROFILE GRADE
NO SCALE

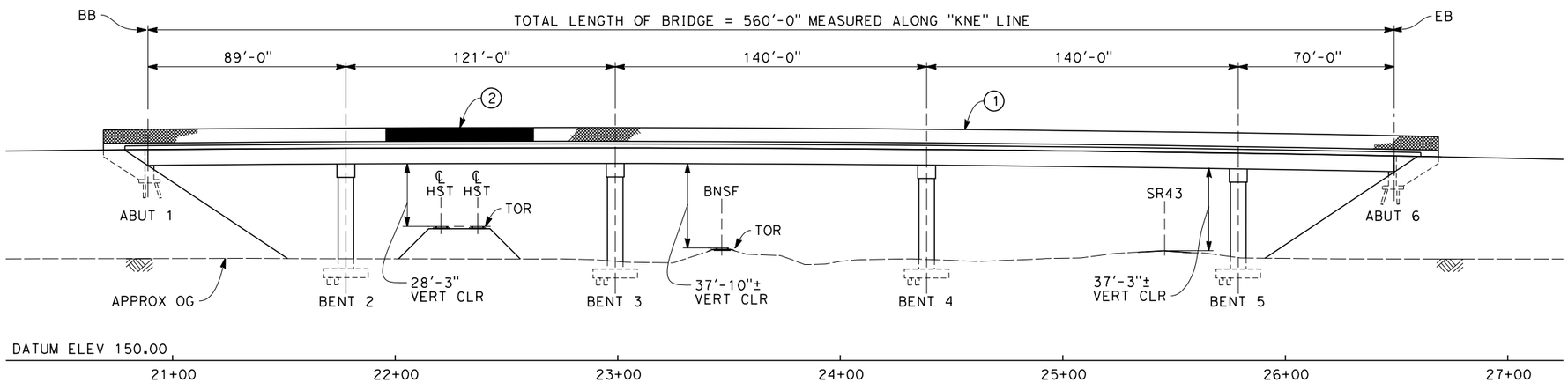

ELEVATION
SCALE: 1"=30'

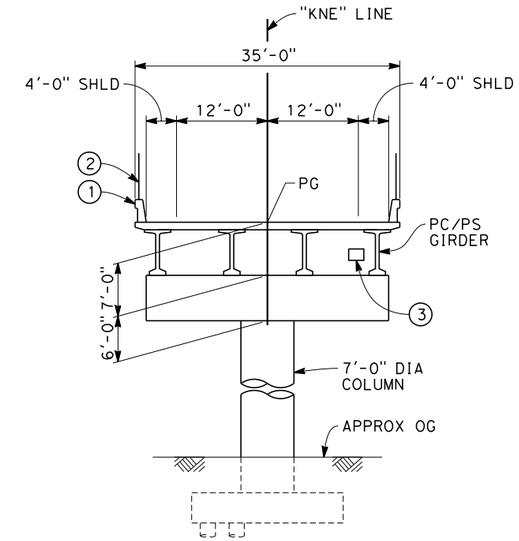

TYPICAL SECTION
SCALE: 1"=10'

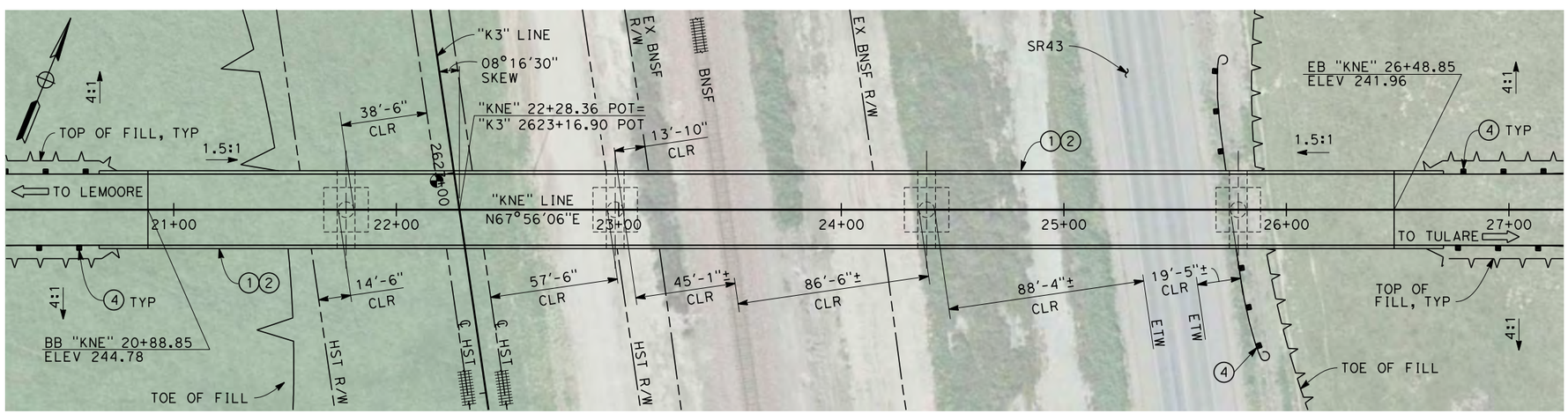

PLAN
SCALE: 1"=30'

NOTES:
1. ALL PILES NOT SHOWN
2. FOR MINIMUM VERTICAL CLEARANCES, HORIZONTAL CURVE DATA, AND DETAILS NOT SHOWN, SEE ROADWAY PLANS.

LEGEND:
1. CONCRETE BARRIER WITH AR FENCE
2. AR FENCE WITH SOLID PLATE OVER HST
3. FUTURE UTILITY ENCASEMENT OPENING
4. MBGR

10 0 10 20 — 1"=10'
30 0 30 60 — 1"=30'

REV	DATE	BY	CHK	APP	DESCRIPTION

DESIGNED BY E. MORAN
DRAWN BY D. BARNHART
CHECKED BY M. ANDREWS
IN CHARGE R. COFFIN
DATE 12/31/13

RECORD SET 15% DESIGN SUBMISSION - NOT FOR CONSTRUCTION

URS | HMM | ARUP
CALIFORNIA HIGH-SPEED TRAIN

CALIFORNIA HIGH-SPEED RAIL AUTHORITY

CALIFORNIA HIGH-SPEED TRAIN PROJECT
FRESNO TO BAKERSFIELD
KAWEAH SUBSECTION
ALIGNMENT K3
OVERHEAD PLANNING STUDY
NEVADA AVE

CONTRACT NO. HSR 06-0003
DRAWING NO. ST2211
SCALE AS SHOWN
SHEET NO. 6 OF 6

12/27/2013 8:37:20 AM c:\pwworking\hmm\external\pro39009\dms91108\FB-ST-2211-K3.dgn
Clark

REV	DATE	BY	CHK	APP	DESCRIPTION

DESIGNED BY L. SMITH
DRAWN BY D. BARNHART
CHECKED BY M. AMINI
IN CHARGE R. COFFIN
DATE 12/31/13

RECORD SET 15% DESIGN SUBMISSION - NOT FOR CONSTRUCTION

URS | HMM | ARUP
CALIFORNIA HIGH-SPEED TRAIN

CALIFORNIA HIGH-SPEED RAIL AUTHORITY

CALIFORNIA HIGH-SPEED TRAIN PROJECT
FRESNO TO BAKERSFIELD
KAWEAH SUBSECTION
ALIGNMENT K4
OVERHEAD PLANNING STUDY
KEY MAP

CONTRACT NO. HSR 06-0003
DRAWING NO. SB0065
SCALE AS SHOWN
SHEET NO. 1 OF 5

BAR59603 12/27/2013 12:11:43 PM c:\pwworking\hmm\external\bar59603\dms91109\FB-SB-0065-K4.dgn

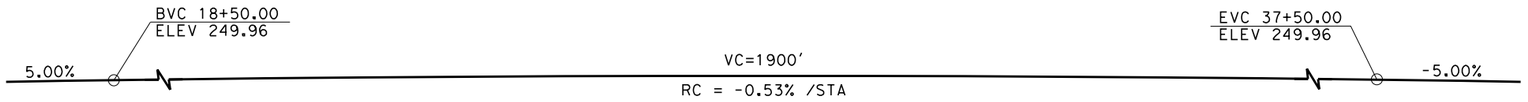

PROFILE GRADE
NO SCALE

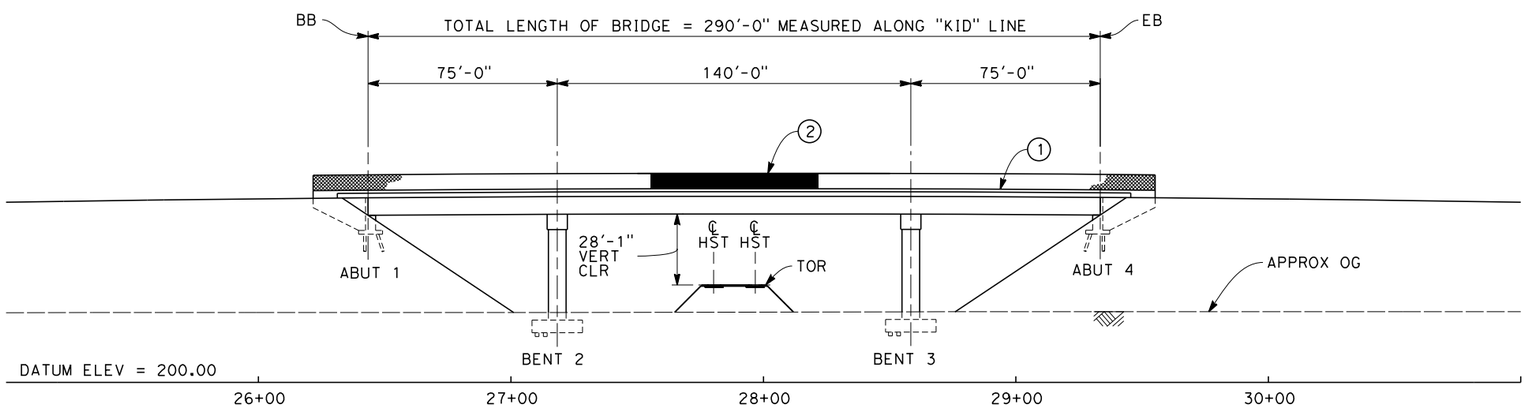

ELEVATION
SCALE: 1"=30'

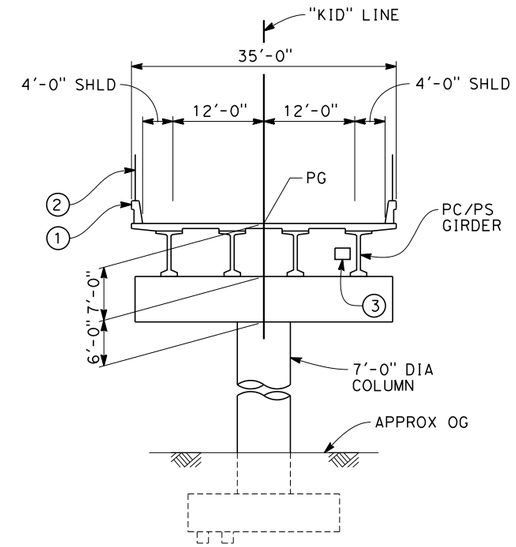

TYPICAL SECTION
SCALE: 1"=10'

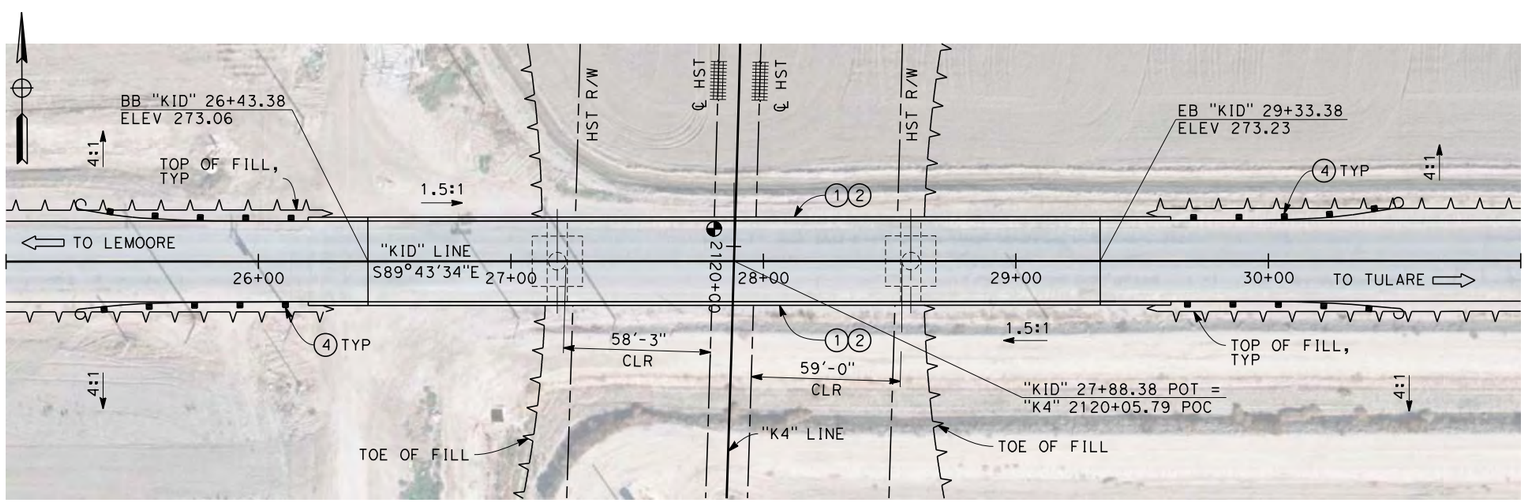

PLAN
SCALE: 1"=30'

NOTES:

1. ALL PILES NOT SHOWN
2. FOR MINIMUM VERTICAL CLEARANCES, HORIZONTAL CURVE DATA, AND DETAILS NOT SHOWN, SEE ROADWAY PLANS.

LEGEND:

1. CONCRETE BARRIER WITH AR FENCE
2. AR FENCE WITH SOLID PLATE OVER HST
3. FUTURE UTILITY ENCASEMENT OPENING
4. MBGR

10 0 10 20 — 1"=10'

30 0 30 60 — 1"=30'

REV	DATE	BY	CHK	APP	DESCRIPTION

DESIGNED BY L. SMITH
DRAWN BY D. BARNHART
CHECKED BY M. AMINI
IN CHARGE R. COFFIN
DATE 12/31/13

RECORD SET 15% DESIGN SUBMISSION - NOT FOR CONSTRUCTION

URS | HMM | ARUP
CALIFORNIA HIGH-SPEED TRAIN

CALIFORNIA HIGH-SPEED RAIL AUTHORITY

CALIFORNIA HIGH-SPEED TRAIN PROJECT
FRESNO TO BAKERSFIELD
KAWEAH SUBSECTION
ALIGNMENT K4
OVERHEAD PLANNING STUDY
IDAHO AVE

CONTRACT NO. HSR 06-0003
DRAWING NO. ST2220
SCALE AS SHOWN
SHEET NO. 2 OF 5

PRE45072 12/26/2013 1:02:54 PM c:\pwworking\hmm\external\pre45072\dms91109\FB-ST-2220-K4.dgn

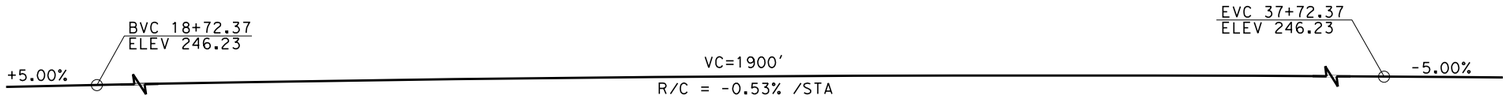

PROFILE GRADE
NO SCALE

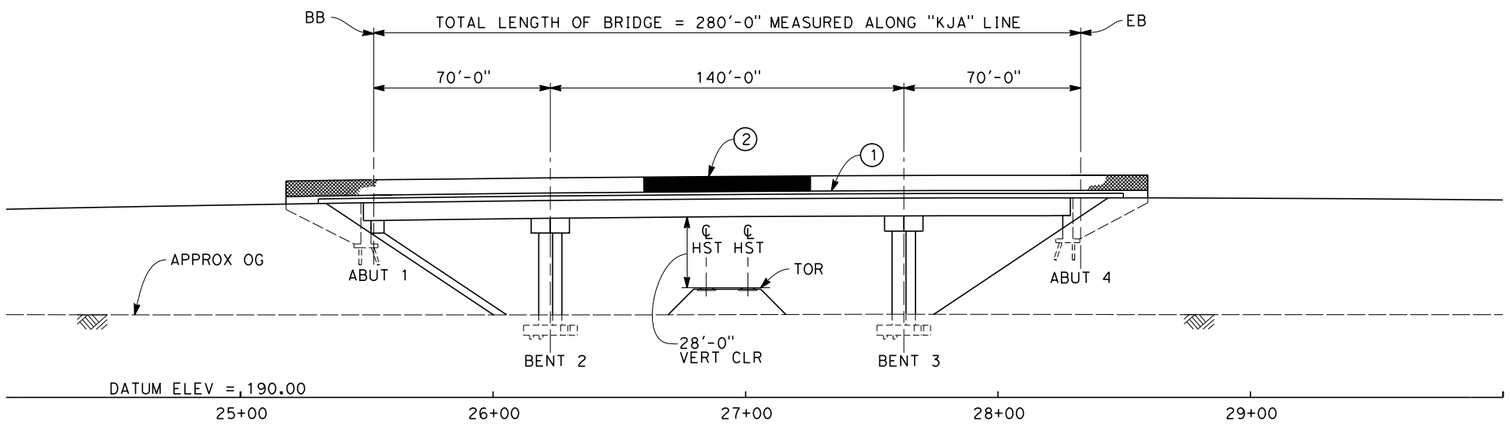

ELEVATION
SCALE: 1"=30'

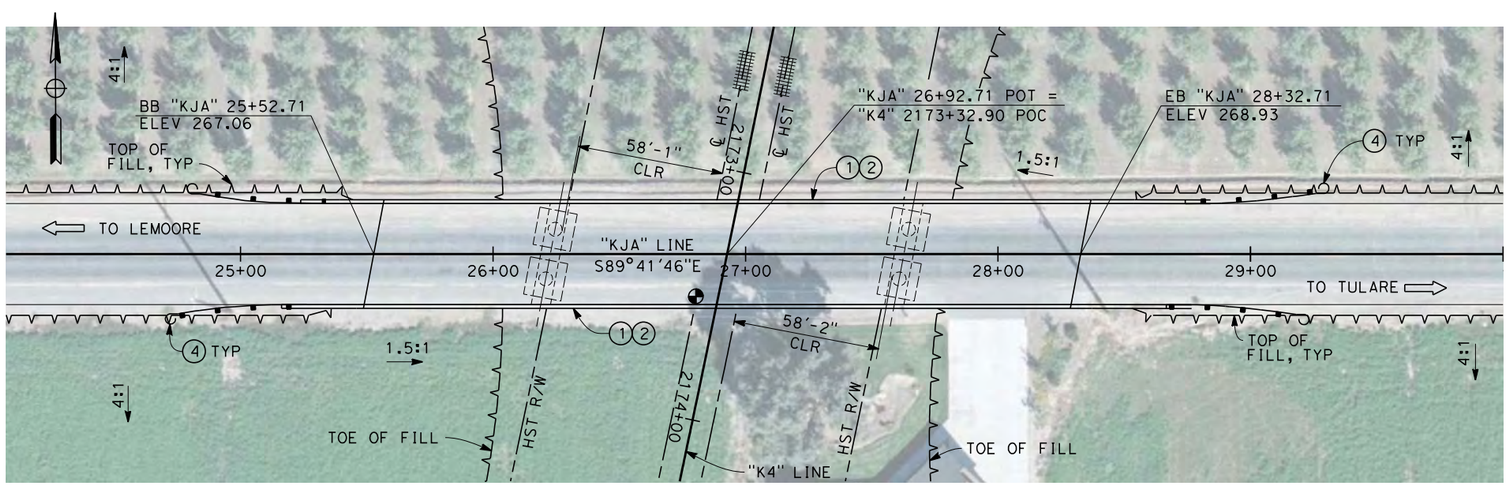

PLAN
SCALE: 1"=30'

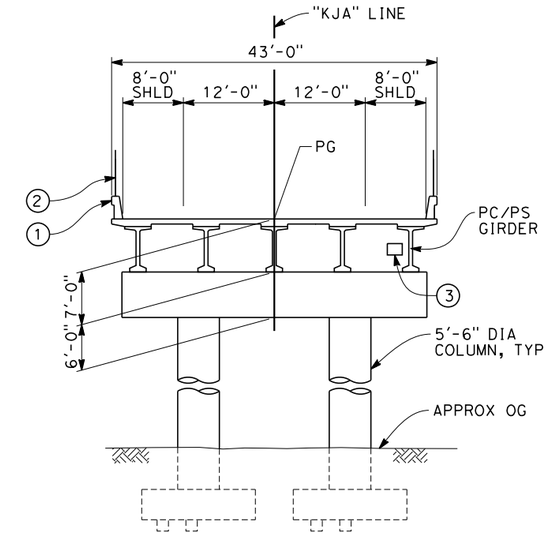

TYPICAL SECTION
SCALE: 1"=10'

NOTES:

1. ALL PILES NOT SHOWN
2. FOR MINIMUM VERTICAL CLEARANCES, HORIZONTAL CURVE DATA, AND DETAILS NOT SHOWN, SEE ROADWAY PLANS.

LEGEND:

1. CONCRETE BARRIER WITH AR FENCE
2. AR FENCE WITH SOLID PLATE OVER HST
3. FUTURE UTILITY ENCASEMENT OPENING
4. MBGR

10 0 10 20 — 1"=10'

30 0 30 60 — 1"=30'

REV	DATE	BY	CHK	APP	DESCRIPTION

DESIGNED BY L SMITH
DRAWN BY D. BARNHART
CHECKED BY M. AMINI
IN CHARGE R. COFFIN
DATE 12/31/13

RECORD SET 15% DESIGN SUBMISSION - NOT FOR CONSTRUCTION

URS | HMM | ARUP
CALIFORNIA HIGH-SPEED TRAIN

CALIFORNIA HIGH-SPEED RAIL AUTHORITY

CALIFORNIA HIGH-SPEED TRAIN PROJECT
FRESNO TO BAKERSFIELD
KAWEAH SUBSECTION
ALIGNMENT K4
OVERHEAD PLANNING STUDY
JACKSON AVE

CONTRACT NO. HSR 06-0003
DRAWING NO. ST2222
SCALE AS SHOWN
SHEET NO. 3 OF 5

12/24/2013 11:52:58 AM c:\pwworking\hmm\external\pre45072\dms91109\FB-ST-2222-K4.dgn
PRE45072

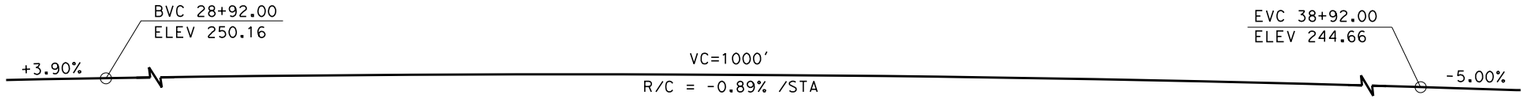

PROFILE GRADE
NO SCALE

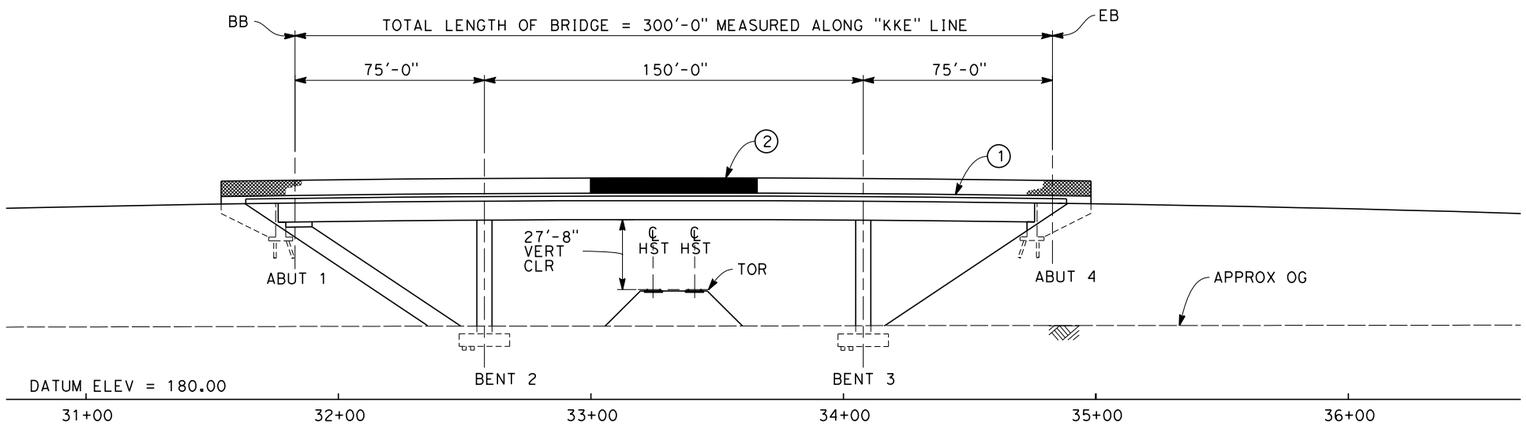

ELEVATION
SCALE: 1"=30'

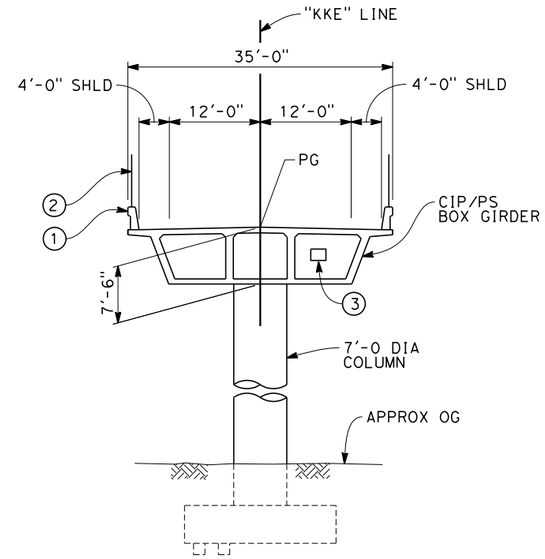

TYPICAL SECTION
SCALE: 1"=10'

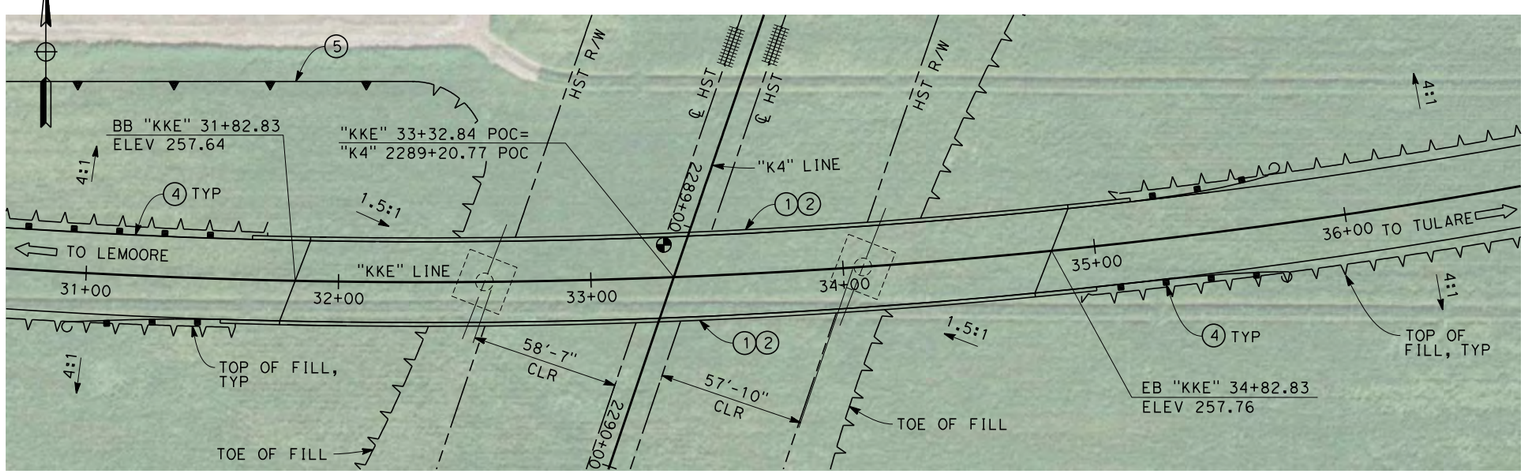

PLAN
SCALE: 1"=30'

NOTES:

1. ALL PILES NOT SHOWN
2. FOR MINIMUM VERTICAL CLEARANCES, HORIZONTAL CURVE DATA, AND DETAILS NOT SHOWN, SEE ROADWAY PLANS.

LEGEND:

1. CONCRETE BARRIER WITH AR FENCE
2. AR FENCE WITH SOLID PLATE OVER HST
3. FUTURE UTILITY ENCASEMENT OPENING
4. MBGR
5. RETAINING WALL

10 0 10 20 — 1"=10'

30 0 30 60 — 1"=30'

REV	DATE	BY	CHK	APP	DESCRIPTION

DESIGNED BY L. SMITH
DRAWN BY D. BARNHART
CHECKED BY M. AMINI
IN CHARGE R. COFFIN
DATE 12/31/13

RECORD SET 15% DESIGN SUBMISSION - NOT FOR CONSTRUCTION

URS | HMM | ARUP
CALIFORNIA HIGH-SPEED TRAIN

CALIFORNIA HIGH-SPEED RAIL AUTHORITY

CALIFORNIA HIGH-SPEED TRAIN PROJECT
FRESNO TO BAKERSFIELD
KAWEAH SUBSECTION
ALIGNMENT K4
OVERHEAD PLANNING STUDY
KENT AVE

CONTRACT NO. HSR 06-0003
DRAWING NO. ST2226
SCALE AS SHOWN
SHEET NO. 4 OF 5

12/26/2013 8:18:59 AM c:\pwworking\hmm\external\pre45072\dms91109\FB-ST-2226-K4.dgn
PRE45072

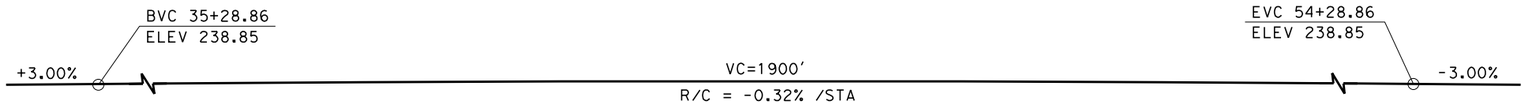

PROFILE GRADE
NO SCALE

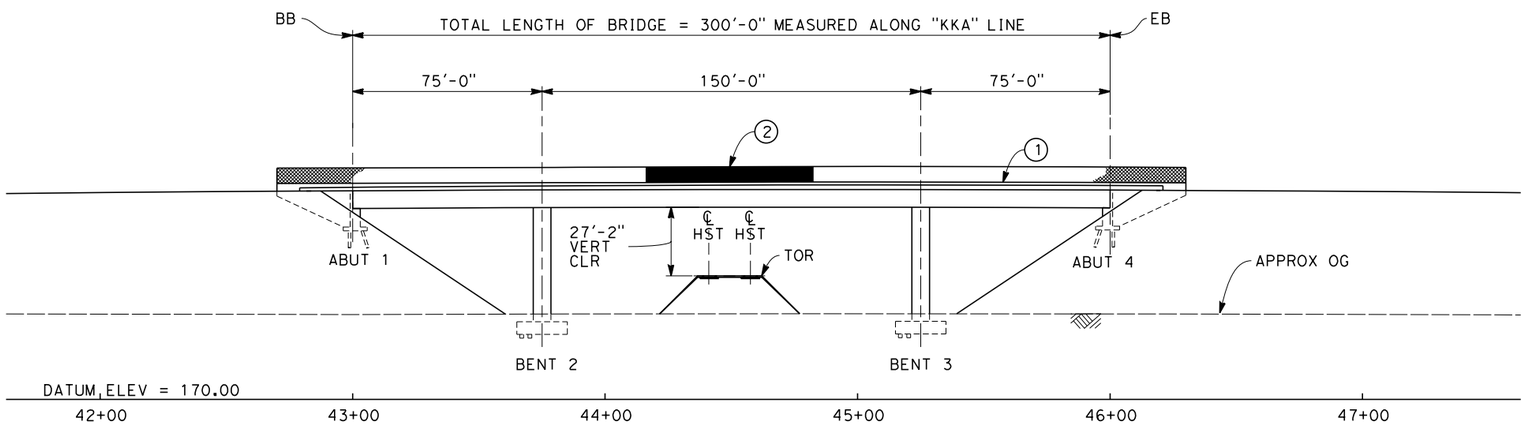

ELEVATION
SCALE: 1"=30'

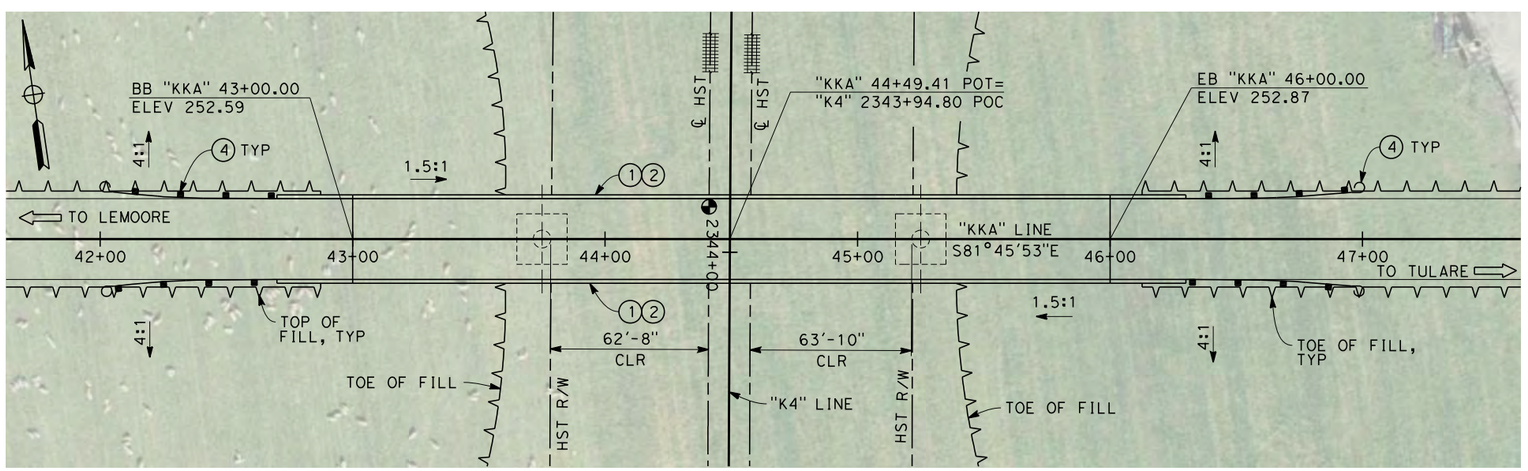

PLAN
SCALE: 1"=30'

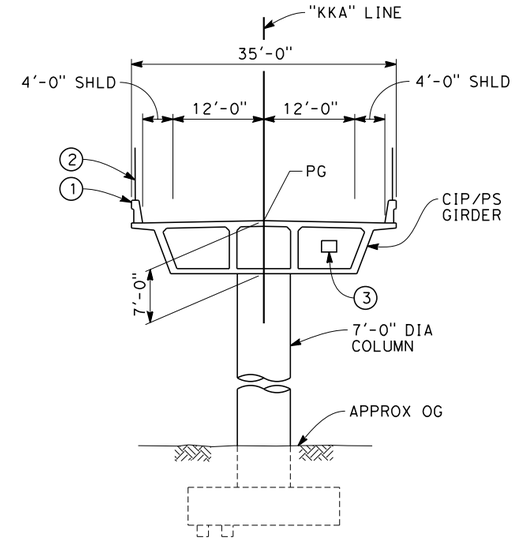

TYPICAL SECTION
SCALE: 1"=10'

NOTES:

1. ALL PILES NOT SHOWN
2. FOR MINIMUM VERTICAL CLEARANCES, HORIZONTAL CURVE DATA, AND DETAILS NOT SHOWN, SEE ROADWAY PLANS.

LEGEND:

1. CONCRETE BARRIER WITH AR FENCE
2. AR FENCE WITH SOLID PLATE OVER HST
3. FUTURE UTILITY ENCASEMENT OPENING
4. MBGR

10 0 10 20 — 1"=10'

30 0 30 60 — 1"=30'

REV	DATE	BY	CHK	APP	DESCRIPTION

DESIGNED BY L. SMITH
DRAWN BY D. BARNHART
CHECKED BY M. AMINI
IN CHARGE R. COFFIN
DATE 12/31/13

RECORD SET 15% DESIGN SUBMISSION - NOT FOR CONSTRUCTION

URS | HMM | ARUP
CALIFORNIA HIGH-SPEED TRAIN

CALIFORNIA HIGH-SPEED RAIL AUTHORITY

CALIFORNIA HIGH-SPEED TRAIN PROJECT
FRESNO TO BAKERSFIELD
KAWEAH SUBSECTION
ALIGNMENT K4
OVERHEAD PLANNING STUDY
KANSAS AVE

CONTRACT NO. HSR 06-0003
DRAWING NO. ST2228
SCALE AS SHOWN
SHEET NO. 5 OF 5

PRE45072 12/26/2013 1:15:49 PM c:\pwworking\hmm\external\pre45072\dms91109\FB-ST-2228-K4.dgn

REV	DATE	BY	CHK	APP	DESCRIPTION

DESIGNED BY E. MORAN
DRAWN BY D. BARNHART
CHECKED BY M. AMINI
IN CHARGE R. COFFIN
DATE 12/31/13

RECORD SET 15% DESIGN SUBMISSION - NOT FOR CONSTRUCTION

URS | HMM | ARUP
CALIFORNIA HIGH-SPEED TRAIN

CALIFORNIA HIGH-SPEED RAIL AUTHORITY

CALIFORNIA HIGH-SPEED TRAIN PROJECT
FRESNO TO BAKERSFIELD
KAWEAH SUBSECTION
ALIGNMENT K5
OVERHEAD PLANNING STUDY
KEY MAP

CONTRACT NO. HSR 06-0003
DRAWING NO. SB0066
SCALE AS SHOWN
SHEET NO. 1 OF 7

BAR59603 12/27/2013 12:18:45 PM CAHSRP-r1.tbl CHSR_PDF_half_black_200dpi.pwr working\hmm\external\bar59603\dms87607\FB-SB-0066-K5.dgn

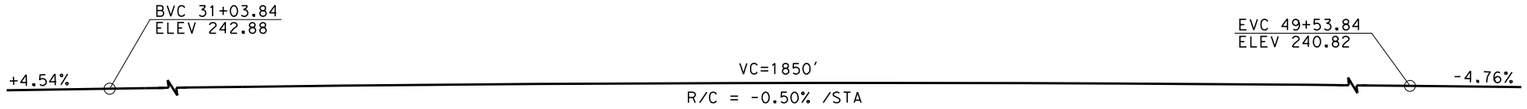

PROFILE GRADE
NO SCALE

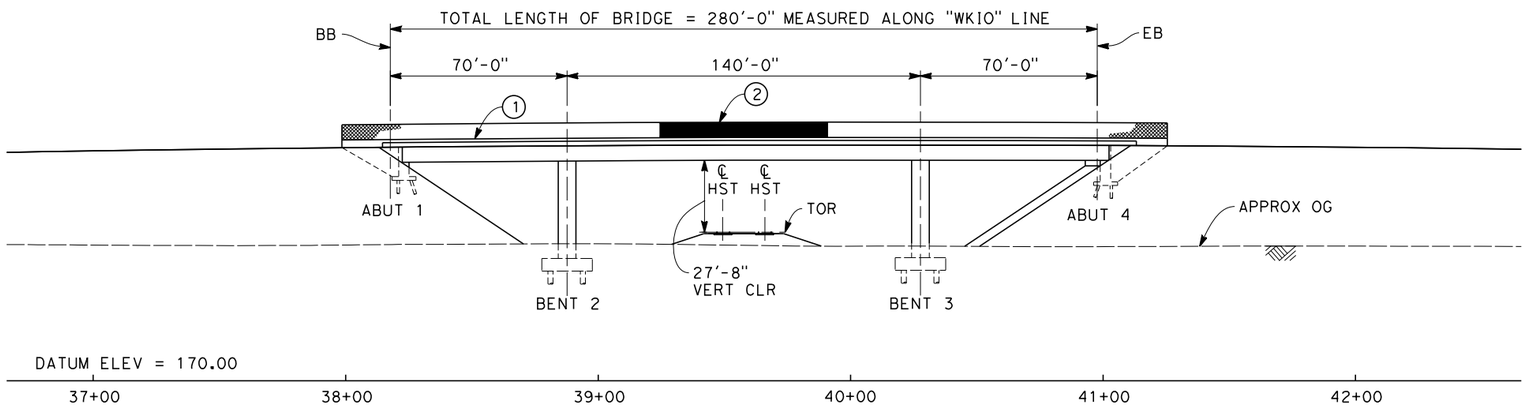

ELEVATION
SCALE: 1"=30'

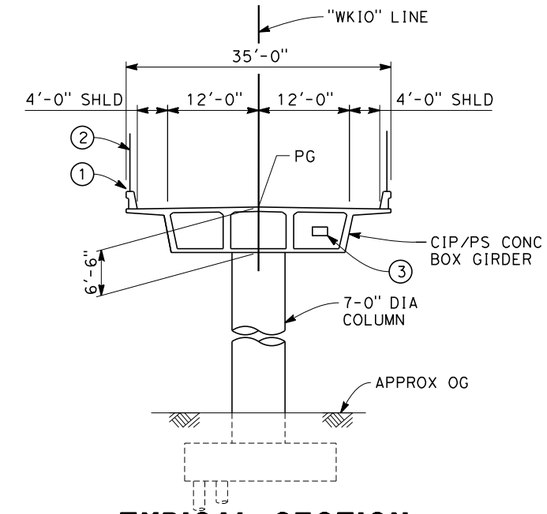

TYPICAL SECTION
SCALE: 1"=10'

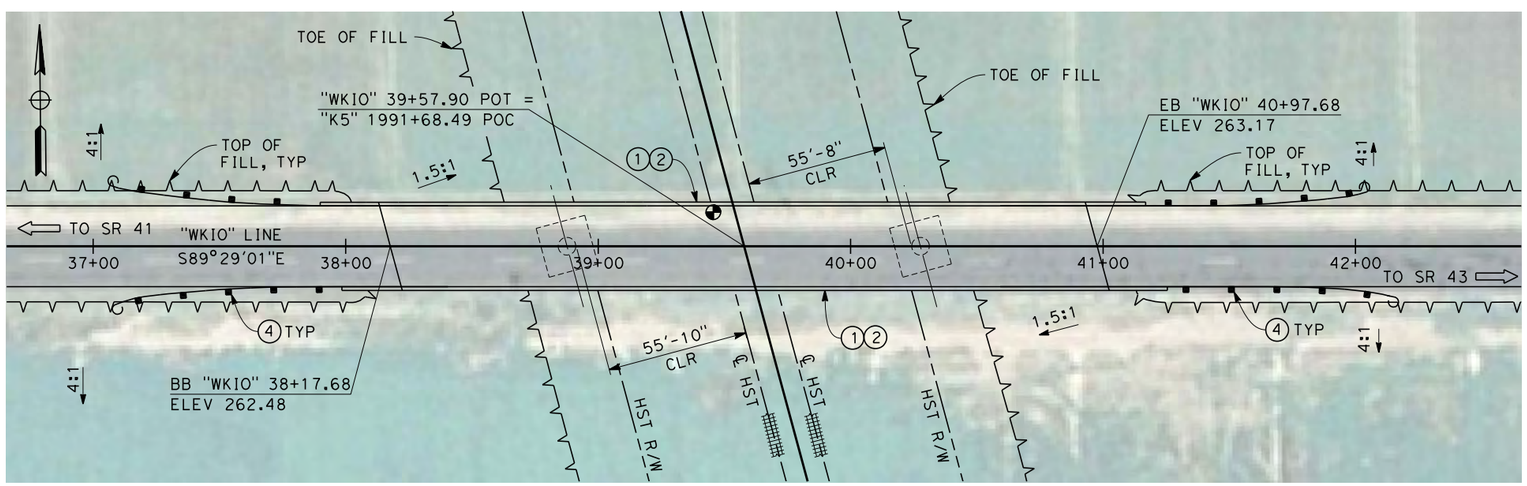

PLAN
SCALE: 1"=30'

NOTES:

1. ALL PILES NOT SHOWN
2. FOR MINIMUM VERTICAL CLEARANCES, HORIZONTAL CURVE DATA, AND DETAILS NOT SHOWN, SEE ROADWAY PLANS.

LEGEND:

1. CONCRETE BARRIER WITH AR FENCE
2. AR FENCE WITH SOLID PLATE OVER HST
3. FUTURE UTILITY ENCASEMENT OPENING
4. MBGR

REV	DATE	BY	CHK	APP	DESCRIPTION

DESIGNED BY E. MORAN
DRAWN BY D. BARNHART
CHECKED BY B. LUSCOMBE
IN CHARGE R. COFFIN
DATE 12/31/13

RECORD SET 15% DESIGN SUBMISSION - NOT FOR CONSTRUCTION

URS | HMM | ARUP
CALIFORNIA HIGH-SPEED TRAIN

CALIFORNIA HIGH-SPEED RAIL AUTHORITY

CALIFORNIA HIGH-SPEED TRAIN PROJECT
FRESNO TO BAKERSFIELD
KAWEAH SUBSECTION
ALIGNMENT K5
OVERHEAD PLANNING STUDY
IONA AVE

CONTRACT NO. HSR 06-0003
DRAWING NO. ST2250
SCALE AS SHOWN
SHEET NO. 2 OF 7

PRE45072 12/26/2013 8:45:01 AM CAHSRP-r1.tbl CHSR_PDF_half_black.pltc:\pwworking\hmm\external\pre45072\dms87607\FB-ST-2250-K5.dgn

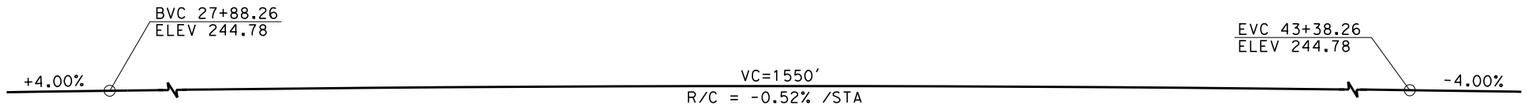

PROFILE GRADE
NO SCALE

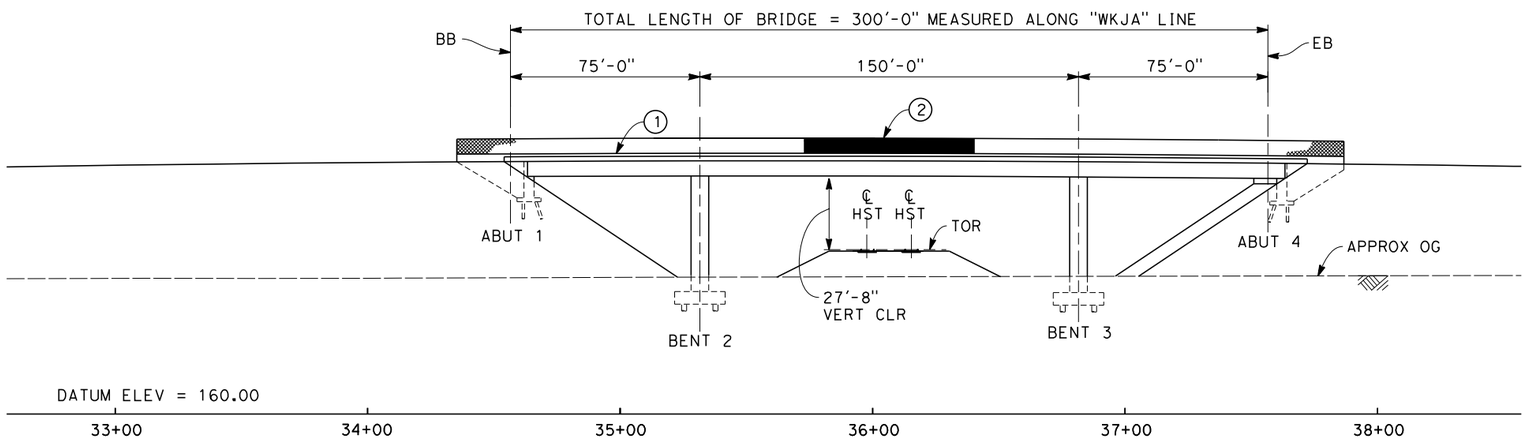

ELEVATION
SCALE: 1"=30'

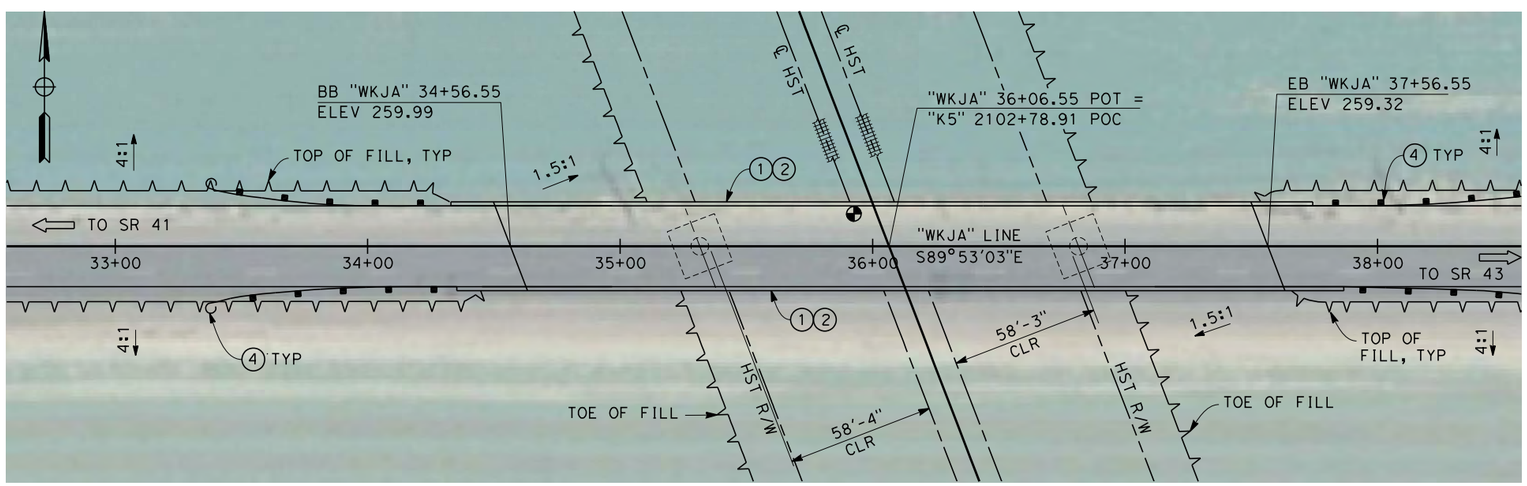

PLAN
SCALE: 1"=30'

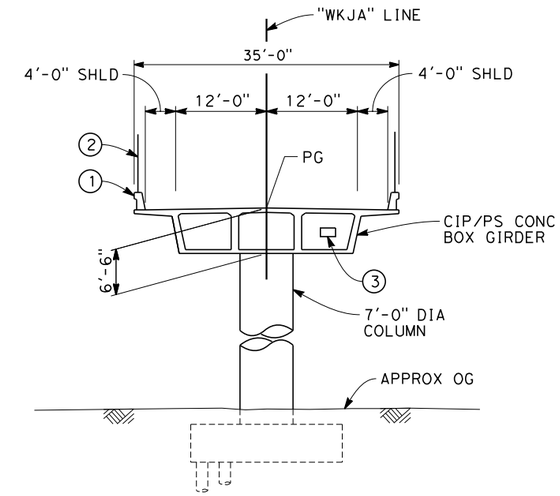

TYPICAL SECTION
SCALE: 1"=10'

NOTES:

1. ALL PILES NOT SHOWN
2. FOR MINIMUM VERTICAL CLEARANCES, HORIZONTAL CURVE DATA, AND DETAILS NOT SHOWN, SEE ROADWAY PLANS.

LEGEND:

1. CONCRETE BARRIER WITH AR FENCE
2. AR FENCE WITH SOLID PLATE OVER HST
3. FUTURE UTILITY ENCASEMENT OPENING
4. MBGR

10 0 10 20
1"=10'

30 0 30 60
1"=30'

REV	DATE	BY	CHK	APP	DESCRIPTION

DESIGNED BY E. MORAN
DRAWN BY D. BARNHART
CHECKED BY B. LUSCOMBE
IN CHARGE R. COFFIN
DATE 12/31/13

RECORD SET 15% DESIGN SUBMISSION - NOT FOR CONSTRUCTION

URS | HMM | ARUP
CALIFORNIA HIGH-SPEED TRAIN

CALIFORNIA HIGH-SPEED RAIL AUTHORITY

CALIFORNIA HIGH-SPEED TRAIN PROJECT
FRESNO TO BAKERSFIELD
KAWEAH SUBSECTION
ALIGNMENT K5
OVERHEAD PLANNING STUDY
JACKSON AVE

CONTRACT NO. HSR 06-0003
DRAWING NO. ST2251
SCALE AS SHOWN
SHEET NO. 3 OF 7

12/27/2013 10:35:26 AM CAHSRP-r1.tbl CHSR_PDF_half_black.pltct:\pwworking\hmm\external\pro39009\dms87607\FB-ST-2251-K5.dgn
Clark

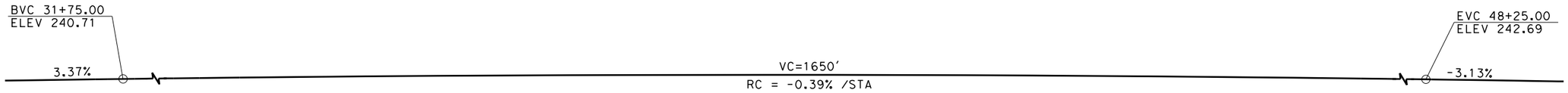

NOTE:
FOR NOTES AND LEGEND
SEE SHEET ST2253

PROFILE GRADE
NO SCALE

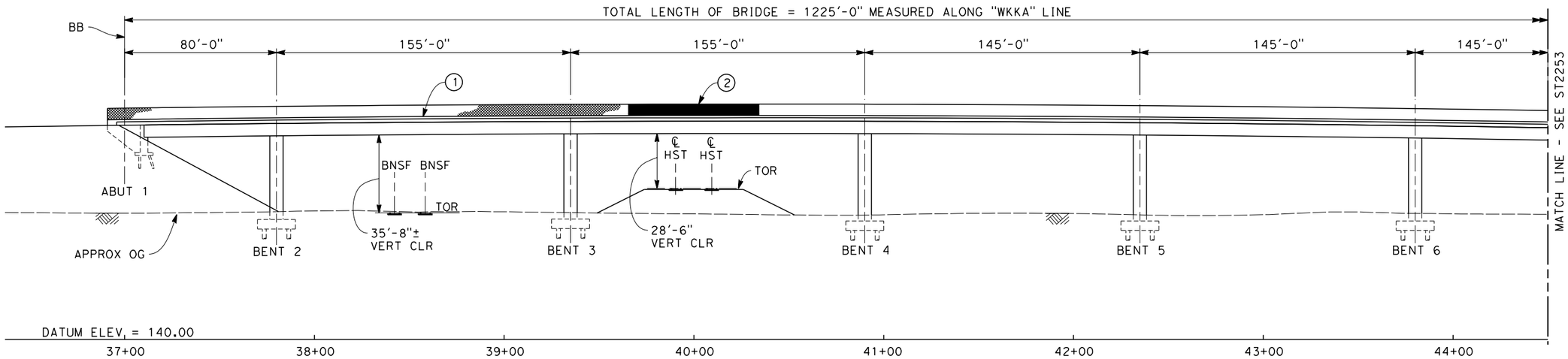

ELEVATION
SCALE: 1"=30'

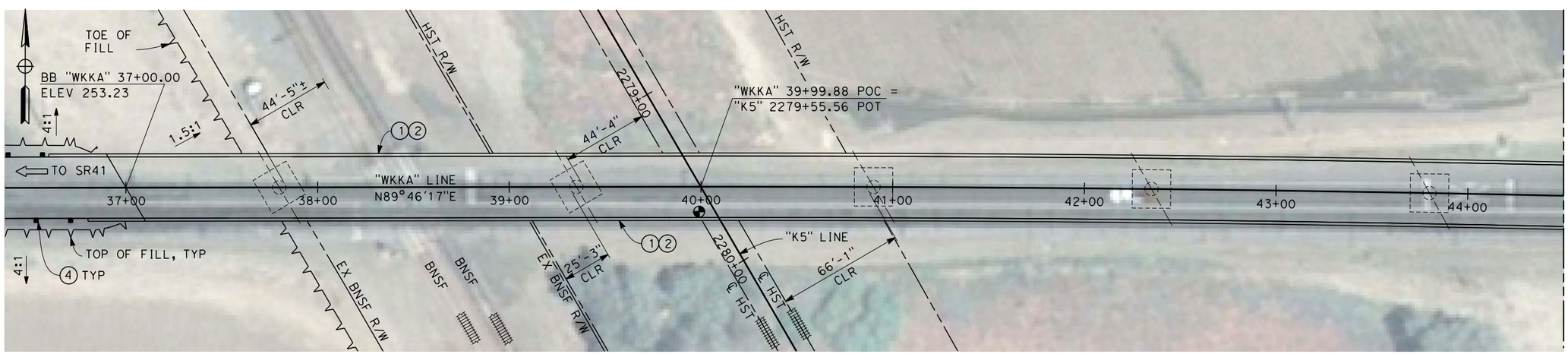

PLAN
SCALE: 1"=30'

30 0 30 60
1"=30'

REV	DATE	BY	CHK	APP	DESCRIPTION

DESIGNED BY E. MORAN
DRAWN BY D. BARNHART
CHECKED BY B. LUSCOMBE
IN CHARGE R. COFFIN
DATE 12/31/13

RECORD SET 15% DESIGN SUBMISSION - NOT FOR CONSTRUCTION

URS | HMM | ARUP
CALIFORNIA HIGH-SPEED TRAIN

CALIFORNIA HIGH-SPEED RAIL AUTHORITY

CALIFORNIA HIGH-SPEED TRAIN PROJECT
FRESNO TO BAKERSFIELD
KAWEAH SUBSECTION
ALIGNMENT K5
OVERHEAD PLANNING STUDY
KANSAS AVE

CONTRACT NO. HSR 06-0003
DRAWING NO. ST2252
SCALE AS SHOWN
SHEET NO. 4 OF 7

PRE45072 12/26/2013 10:05:37 AM CAHSRP-r1.tbl CHSR_PDF_half_black.pltct:\pwworking\hmm\external\pre45072\dms87607\FB-ST-2252-K5.dgn

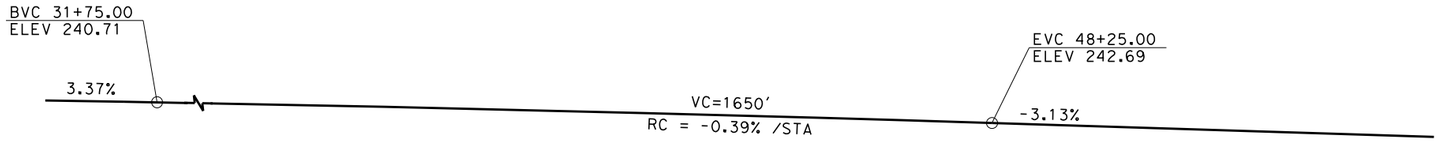

PROFILE GRADE
NO SCALE

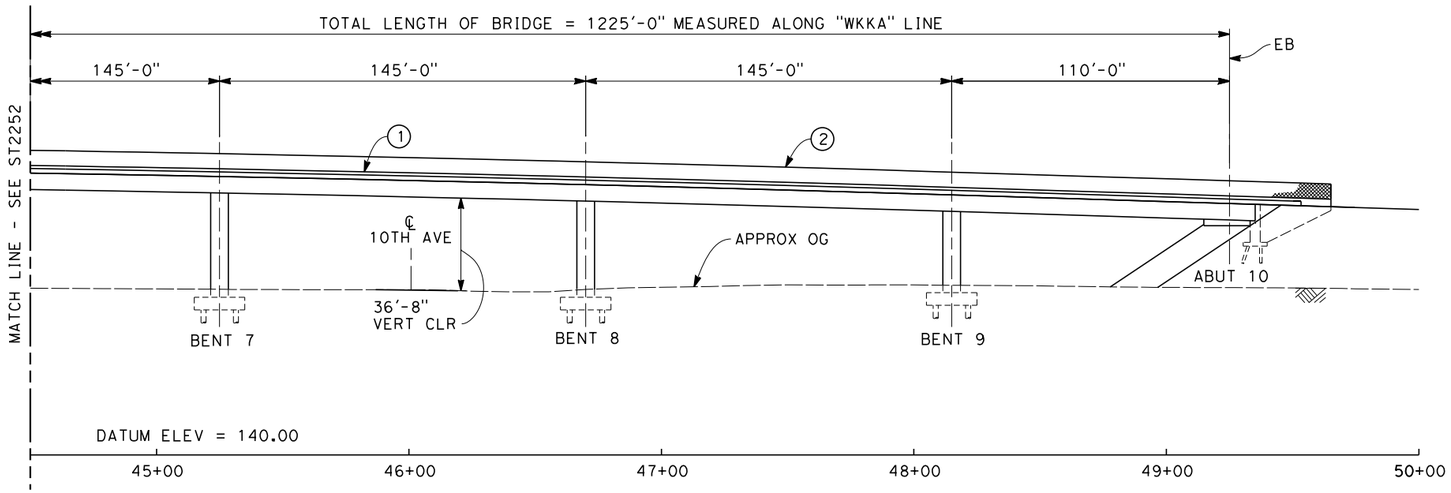

ELEVATION
SCALE: 1"=30'

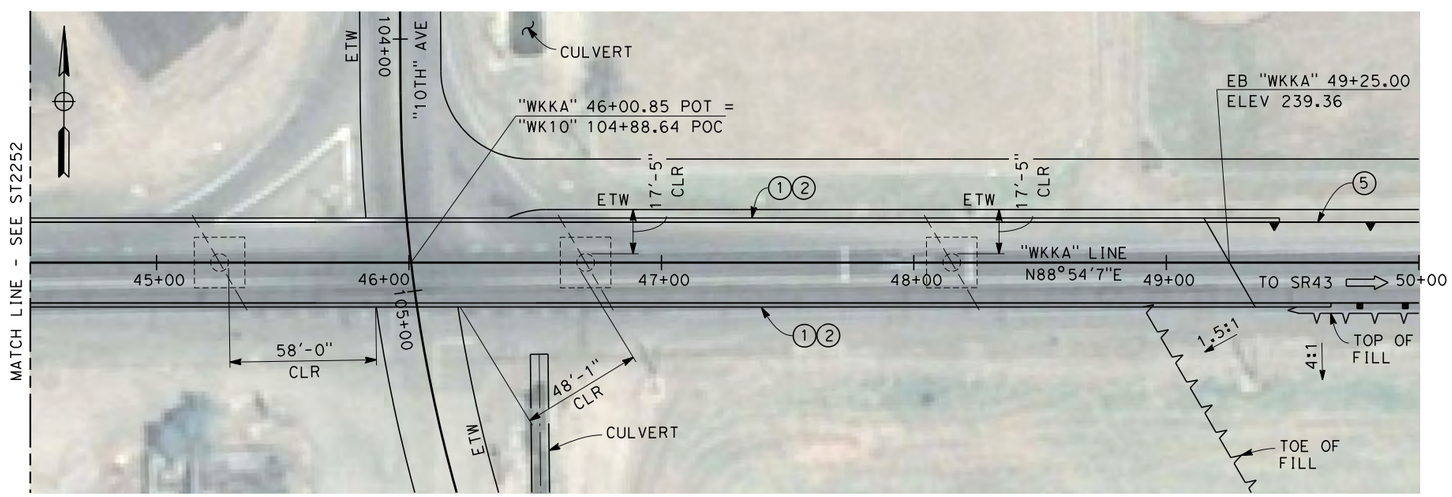

PLAN
SCALE: 1"=30'

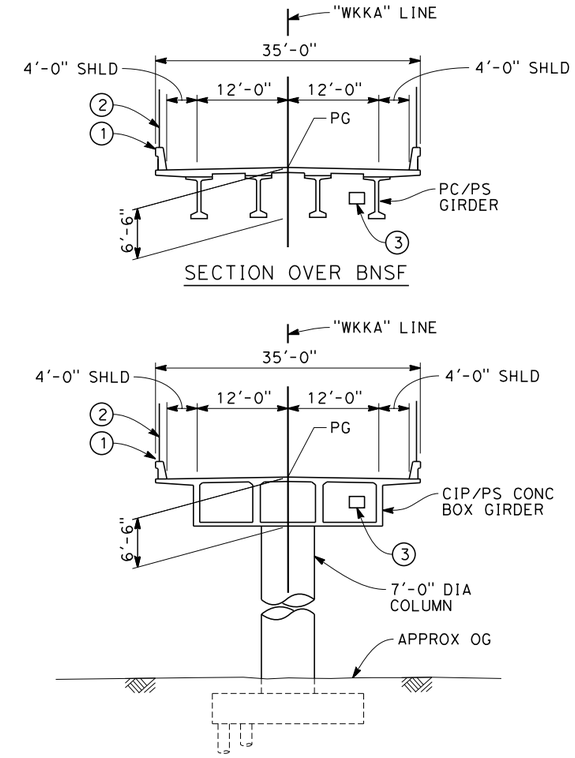

TYPICAL SECTION
SCALE: 1"=10'

NOTES:

1. ALL PILES NOT SHOWN
2. FOR MINIMUM VERTICAL CLEARANCES, HORIZONTAL CURVE DATA, AND DETAILS NOT SHOWN, SEE ROADWAY PLANS.

LEGEND:

1. CONCRETE BARRIER WITH AR FENCE
2. AR FENCE WITH SOLID PLATE OVER HST
3. FUTURE UTILITY ENCASEMENT OPENING
4. MBGR
5. RETAINING WALL

10 0 10 20 — 1"=10'

30 0 30 60 — 1"=30'

REV	DATE	BY	CHK	APP	DESCRIPTION

DESIGNED BY E. MORAN
DRAWN BY D. BARNHART
CHECKED BY B. LUSCOMBE
IN CHARGE R. COFFIN
DATE 12/31/13

RECORD SET 15% DESIGN SUBMISSION - NOT FOR CONSTRUCTION

URS | HMM | ARUP
CALIFORNIA HIGH-SPEED TRAIN

CALIFORNIA HIGH-SPEED RAIL AUTHORITY

CALIFORNIA HIGH-SPEED TRAIN PROJECT
FRESNO TO BAKERSFIELD
KAWEAH SUBSECTION
ALIGNMENT K5
OVERHEAD PLANNING STUDY
KANSAS AVE

CONTRACT NO. HSR 06-0003
DRAWING NO. ST2253
SCALE AS SHOWN
SHEET NO. 5 OF 7

PRE45072 12/26/2013 10:07:01 AM CAHSRP-r1.tbl CHSR_PDF_half_black.pltc:\pwworking\hmm\external\pre45072\dms87607\FB-ST-2253-K5.dgn

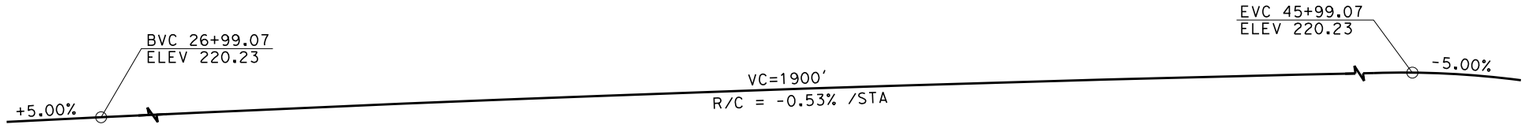

PROFILE GRADE
NO SCALE

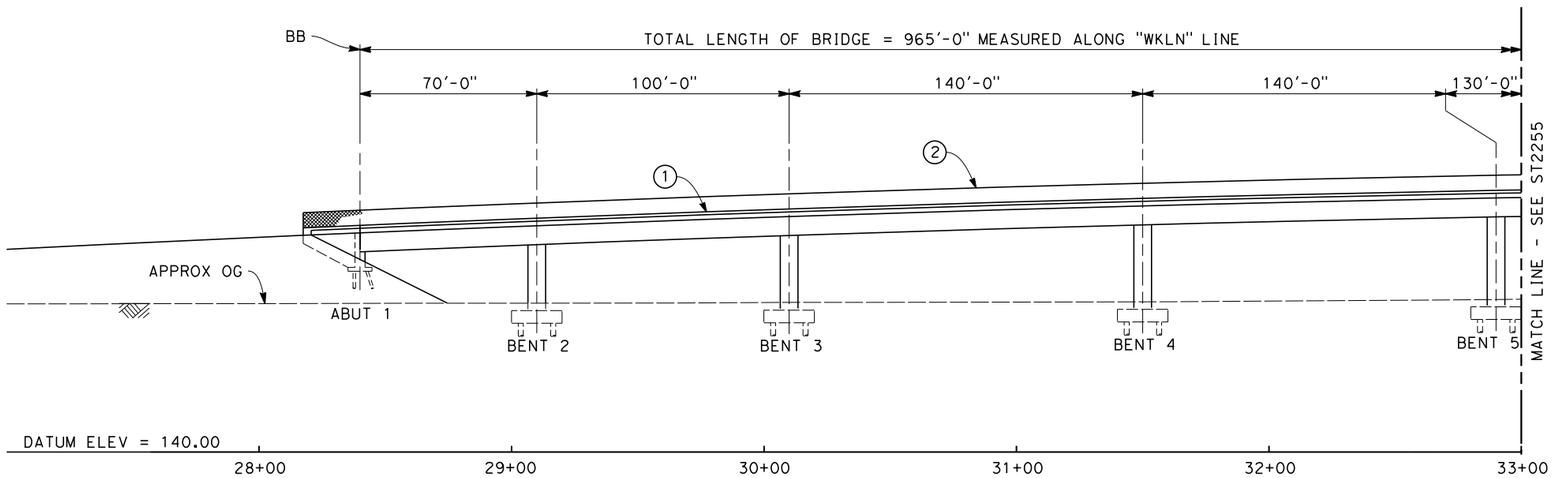

ELEVATION
SCALE: 1"=30'

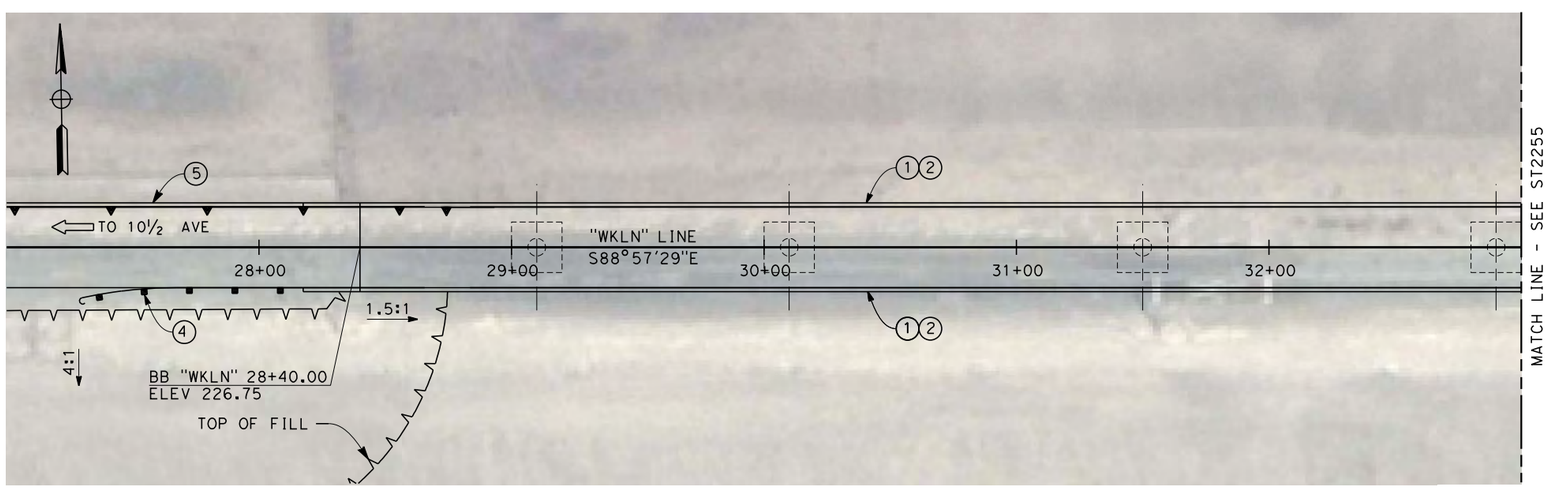

PLAN
SCALE: 1"=30'

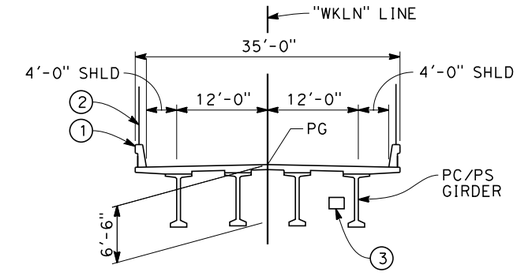

SECTION OVER BNSF

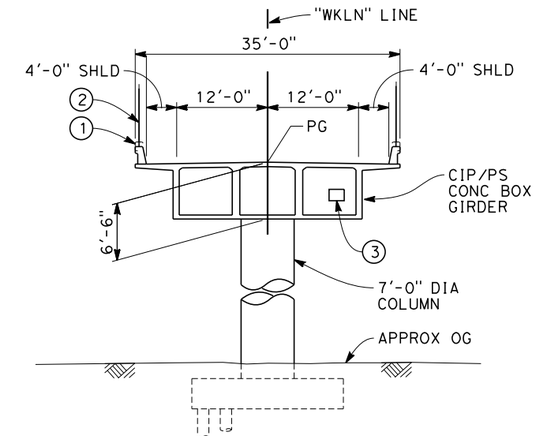

TYPICAL SECTION
SCALE: 1"=10'

NOTES:

1. ALL PILES NOT SHOWN
2. FOR MINIMUM VERTICAL CLEARANCES, HORIZONTAL CURVE DATA, AND DETAILS NOT SHOWN, SEE ROADWAY PLANS.

LEGEND:

1. CONCRETE BARRIER WITH AR FENCE
2. AR FENCE WITH SOLID PLATE OVER HST
3. FUTURE UTILITY ENCASEMENT OPENING
4. MBGR
5. RETAINING WALL WITH BARRIER

10 0 10 20
1"=10'

30 0 30 60
1"=30'

REV	DATE	BY	CHK	APP	DESCRIPTION

DESIGNED BY E. MORAN
DRAWN BY D. BARNHART
CHECKED BY B. LUSCOMBE
IN CHARGE R. COFFIN
DATE 12/31/13

RECORD SET 15% DESIGN SUBMISSION - NOT FOR CONSTRUCTION

URS | HMM | ARUP
CALIFORNIA HIGH-SPEED TRAIN

CALIFORNIA HIGH-SPEED RAIL AUTHORITY

CALIFORNIA HIGH-SPEED TRAIN PROJECT
FRESNO TO BAKERSFIELD
KAWEAH SUBSECTION
ALIGNMENT K5
OVERHEAD PLANNING STUDY
LANSING AVE

CONTRACT NO. HSR 06-0003
DRAWING NO. ST2254
SCALE AS SHOWN
SHEET NO. 6 OF 7

PRE45072 12/26/2013 2:09:40 PM CAHSRP-r1.tbl CHSR_PDF_half_black.pltc:\pwworking\hmm\external\pre45072\dms87607\FB-ST-2254-K5.dgn

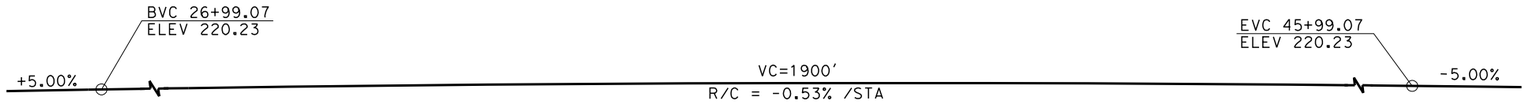

NOTE:
FOR NOTES AND LEGEND
SEE SHEET ST2253

PROFILE GRADE
NO SCALE

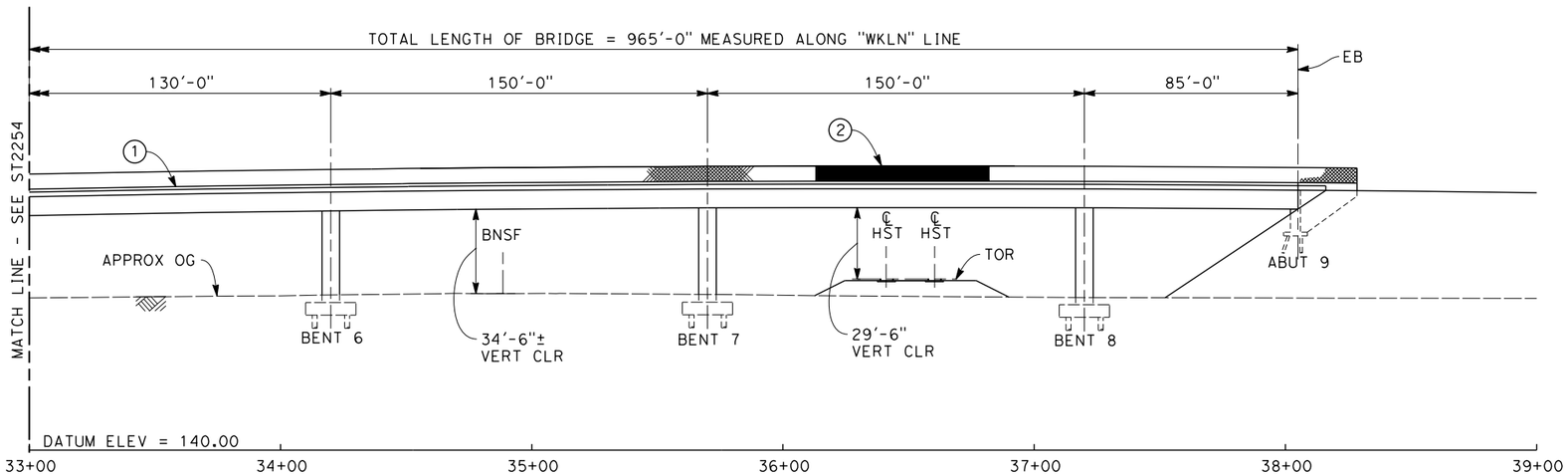

ELEVATION
SCALE: 1"=30'

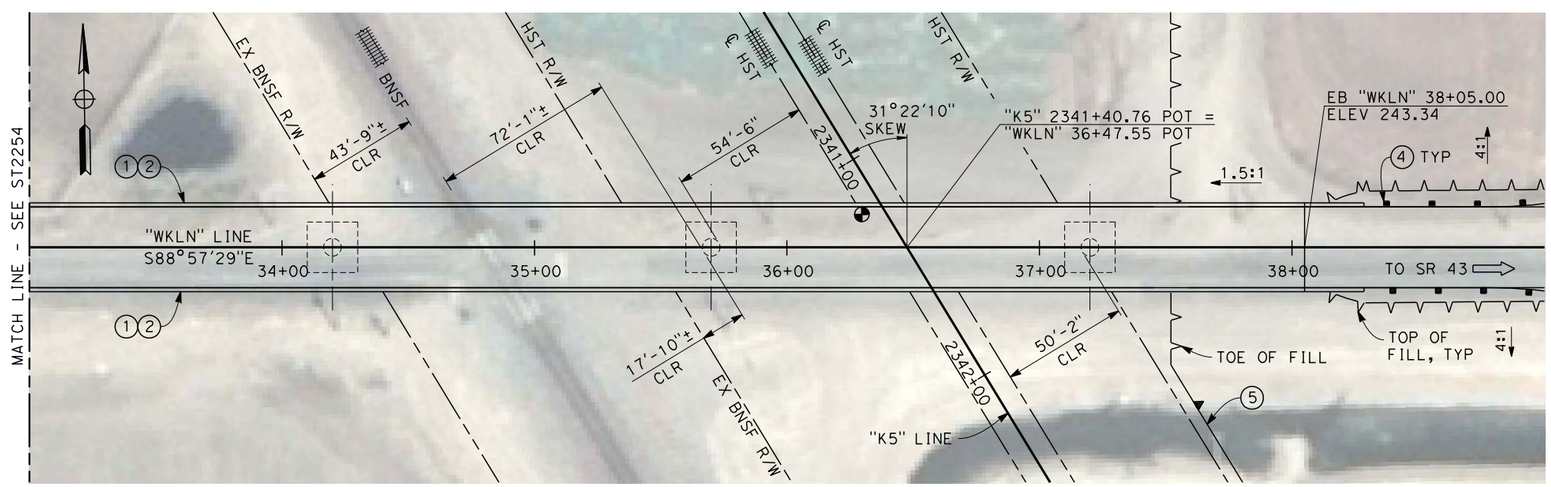

PLAN
SCALE: 1"=30'

30 0 30 60
1"=30'

REV	DATE	BY	CHK	APP	DESCRIPTION

DESIGNED BY E. MORAN
DRAWN BY D. BARNHART
CHECKED BY B. LUSCOMBE
IN CHARGE R. COFFIN
DATE 12/31/13

RECORD SET 15% DESIGN SUBMISSION - NOT FOR CONSTRUCTION

URS | HMM | ARUP
CALIFORNIA HIGH-SPEED TRAIN

CALIFORNIA
HIGH-SPEED RAIL AUTHORITY

CALIFORNIA HIGH-SPEED TRAIN PROJECT
FRESNO TO BAKERSFIELD
KAWEAH SUBSECTION
ALIGNMENT K5
OVERHEAD PLANNING STUDY
LANSING AVE

CONTRACT NO. HSR 06-0003
DRAWING NO. ST2255
SCALE AS SHOWN
SHEET NO. 7 OF 7

BAR59603 12/27/2013 10:22:13 AM CAHSRP-r1.tbl CHSR_PDF_half_black_200.pdf dpw working\hmm\external\bar59603\dms87607\FB-ST-2255-K5.dgn

REV	DATE	BY	CHK	APP	DESCRIPTION

DESIGNED BY M. ANDREWS
DRAWN BY D. BARNHART
CHECKED BY B. LUSCOMBE
IN CHARGE R. COFFIN
DATE 12/31/13

RECORD SET 15% DESIGN SUBMISSION - NOT FOR CONSTRUCTION

URS | HMM | ARUP
CALIFORNIA HIGH-SPEED TRAIN

CALIFORNIA HIGH-SPEED RAIL AUTHORITY

CALIFORNIA HIGH-SPEED TRAIN PROJECT FRESNO TO BAKERSFIELD

KAWEAH SUBSECTION
ALIGNMENT K6
OVERHEAD PLANNING STUDY
KEY MAP

CONTRACT NO. HSR 06-0003
DRAWING NO. SB0067
SCALE AS SHOWN
SHEET NO. 1 OF 7

AND52110 12/19/2013 3:39:55 PM CAHSRP-r1.tbl CHSR_PDF_half_black.pltc:\pwworking\hmm\external\and52110\dms90297\FB-SB-0067-K6.dgn

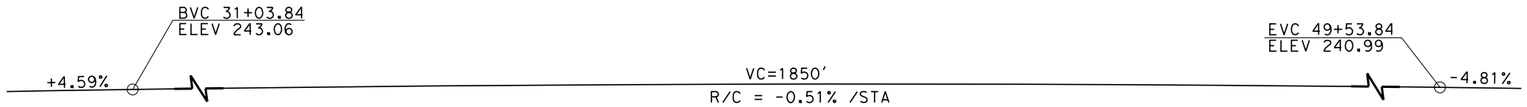

PROFILE GRADE
NO SCALE

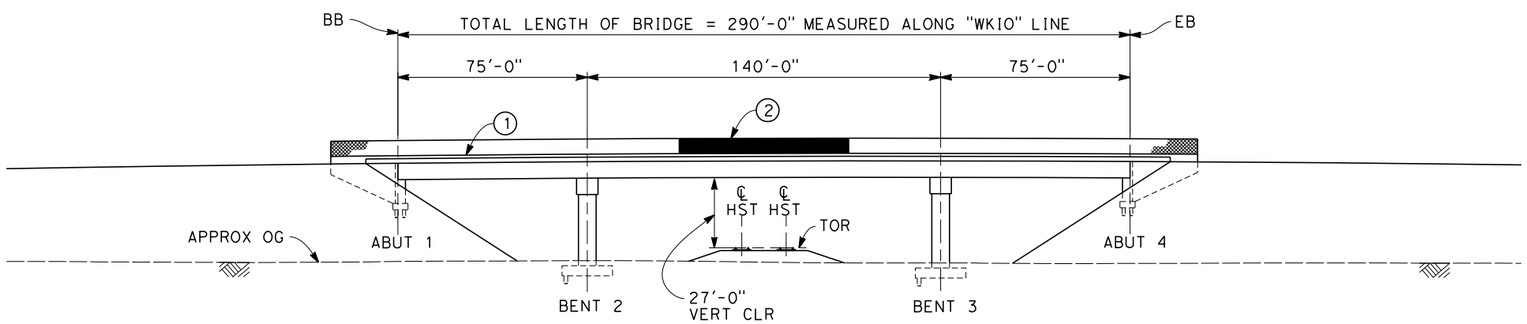

ELEVATION
SCALE: 1"=30'

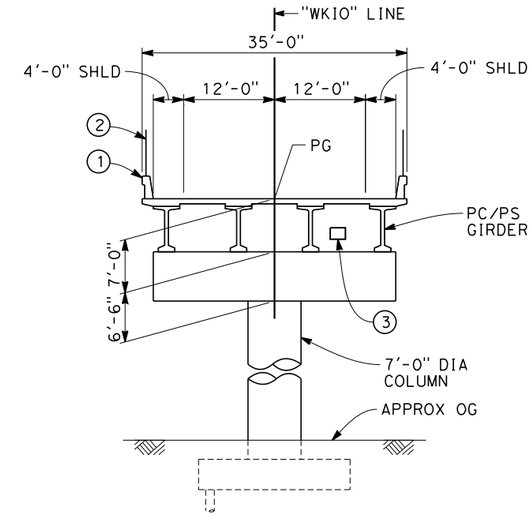

TYPICAL SECTION
SCALE: 1"=10'

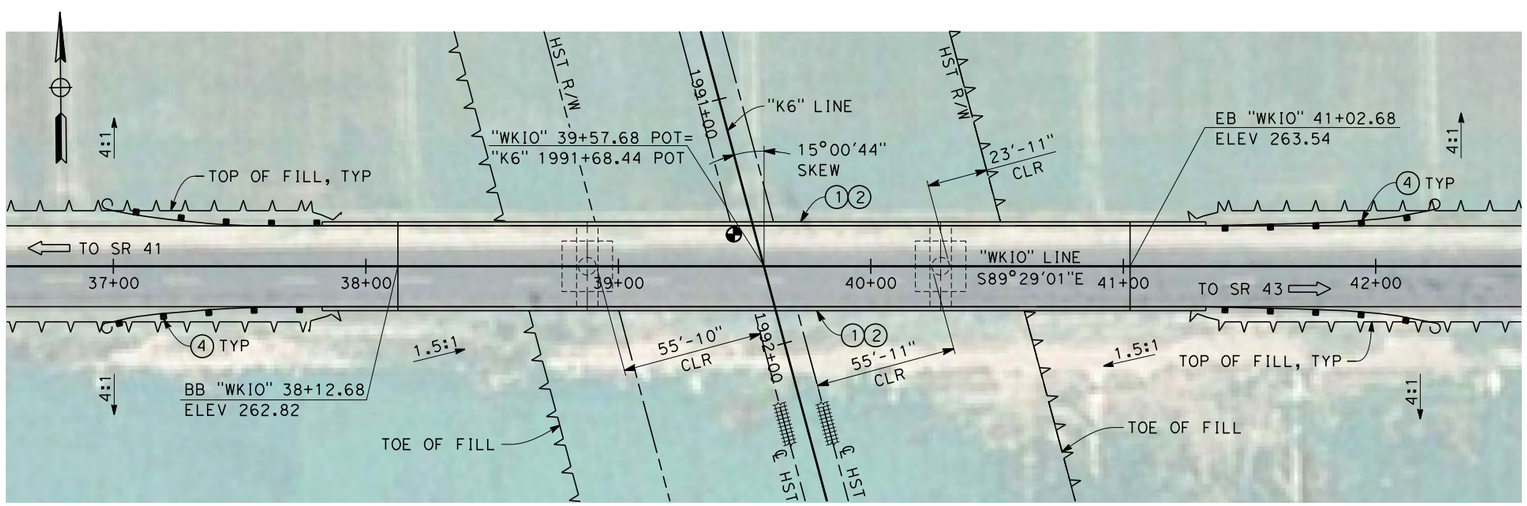

PLAN
SCALE: 1"=30'

NOTES:

1. ALL PILES NOT SHOWN
2. FOR MINIMUM VERTICAL CLEARANCESS, HORIZONTAL CURVE DATA, AND DETAILS NOT SHOWN, SEE ROADWAY PLANS.

LEGEND:

1. CONCRETE BARRIER WITH AR FENCE
2. AR FENCE WITH SOLID PLATE OVER HST
3. FUTURE UTILITY ENCASEMENT OPENING
4. MBGR

10 0 10 20
1"=10'

30 0 30 60
1"=30'

REV	DATE	BY	CHK	APP	DESCRIPTION

DESIGNED BY M. ANDREWS
DRAWN BY D. BARNHART
CHECKED BY B. LUSCOMBE
IN CHARGE R. COFFIN
DATE 12/31/13

RECORD SET 15% DESIGN SUBMISSION - NOT FOR CONSTRUCTION

URS | HMM | ARUP
CALIFORNIA HIGH-SPEED TRAIN

CALIFORNIA HIGH-SPEED RAIL AUTHORITY

CALIFORNIA HIGH-SPEED TRAIN PROJECT
FRESNO TO BAKERSFIELD
HANFORD WEST BYPASS SUBSECTION
ALIGNMENT K6
OVERHEAD PLANNING STUDY
IONA AVE

CONTRACT NO. HSR 06-0003
DRAWING NO. ST2260
SCALE AS SHOWN
SHEET NO. 2 OF 7

AND52110 12/19/2013 4:02:57 PM CAHSRP-r1.tbl CHSR_PDF_half_black.pltct:\pwworking\hmm\external\and52110\dms90297\FB-ST-2260-K6.dgn

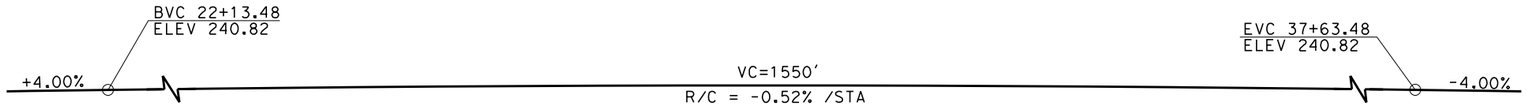

PROFILE GRADE
NO SCALE

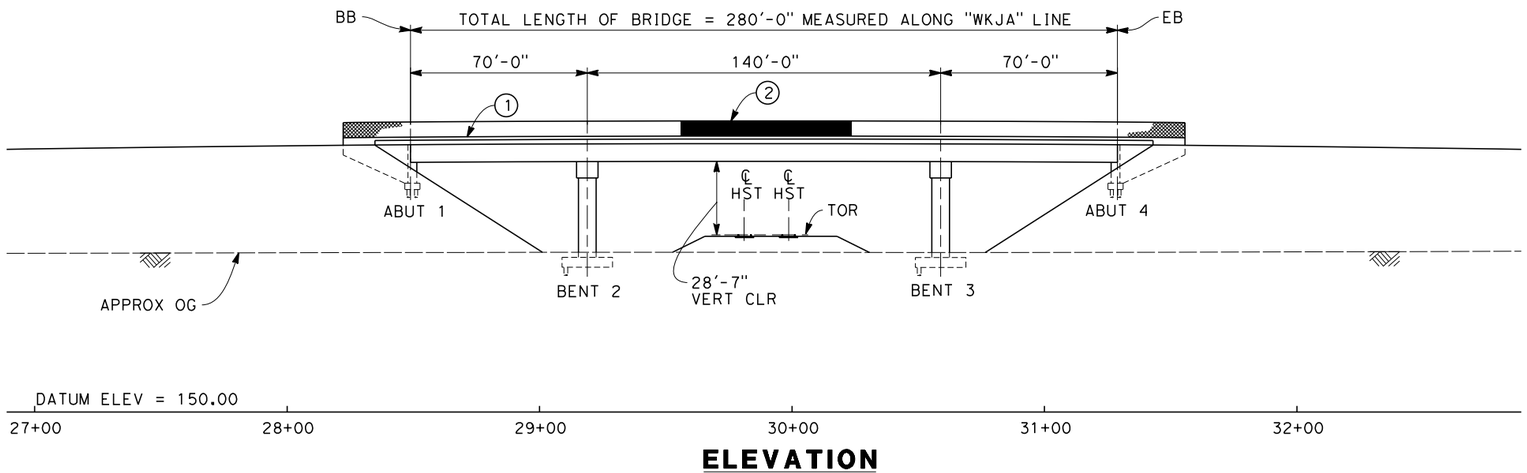

ELEVATION
SCALE: 1"=30'

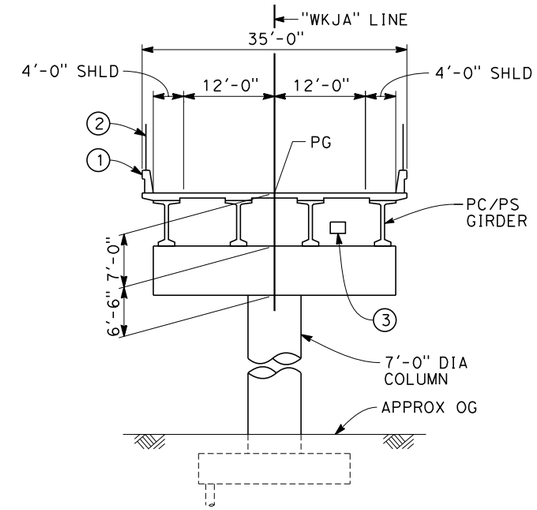

TYPICAL SECTION
SCALE: 1"=10'

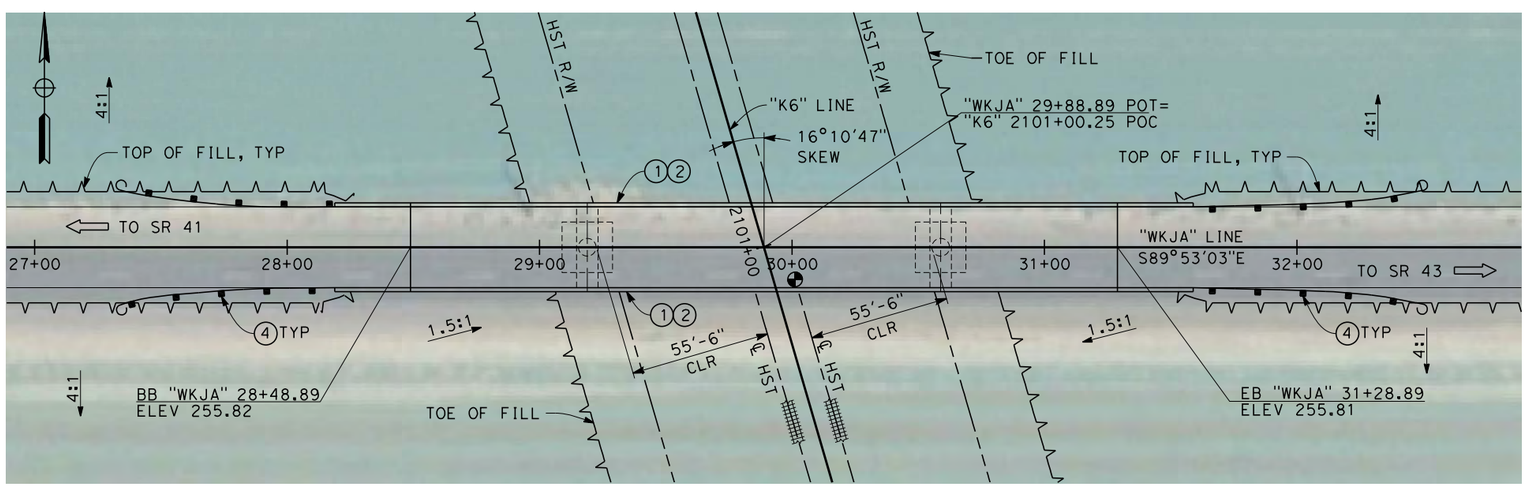

PLAN
SCALE: 1"=30'

NOTES:

1. ALL PILES NOT SHOWN
2. FOR MINIMUM VERTICAL CLEARANCESS, HORIZONTAL CURVE DATA, AND DETAILS NOT SHOWN, SEE ROADWAY PLANS.

LEGEND:

1. CONCRETE BARRIER WITH AR FENCE
2. AR FENCE WITH SOLID PLATE OVER HST
3. FUTURE UTILITY ENCASEMENT OPENING
4. MBGR

10 0 10 20
1"=10'

30 0 30 60
1"=30'

REV	DATE	BY	CHK	APP	DESCRIPTION

DESIGNED BY M. ANDREWS
DRAWN BY D. BARNHART
CHECKED BY B. LUSCOMBE
IN CHARGE R. COFFIN
DATE 12/31/13

RECORD SET 15% DESIGN SUBMISSION - NOT FOR CONSTRUCTION

URS | HMM | ARUP
CALIFORNIA HIGH-SPEED TRAIN

CALIFORNIA HIGH-SPEED RAIL AUTHORITY

CALIFORNIA HIGH-SPEED TRAIN PROJECT
FRESNO TO BAKERSFIELD
KAWEAH SUBSECTION
ALIGNMENT K6
OVERHEAD PLANNING STUDY
JACKSON AVE

CONTRACT NO. HSR 06-0003
DRAWING NO. ST2261
SCALE AS SHOWN
SHEET NO. 3 OF 7

AND52110 12/19/2013 4:13:24 PM CAHSRP-r1.tbl CHSR_PDF_half_black.pltc:\pwworking\hmm\external\and52110\dms90297\FB-ST-2261-K6.dgn

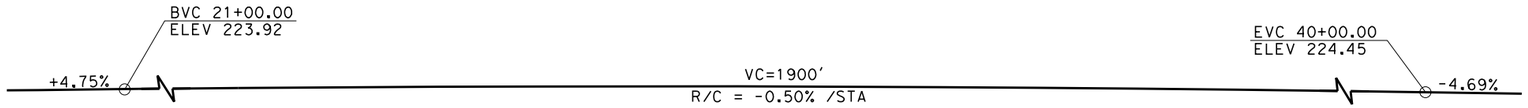

PROFILE GRADE
NO SCALE

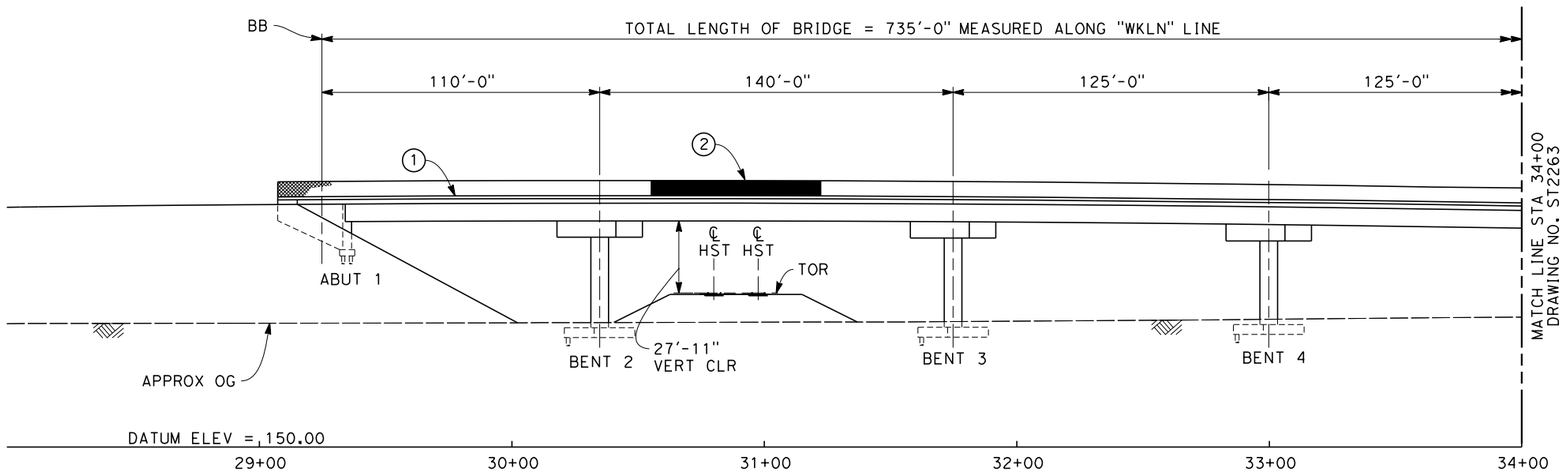

ELEVATION
SCALE: 1"=30'

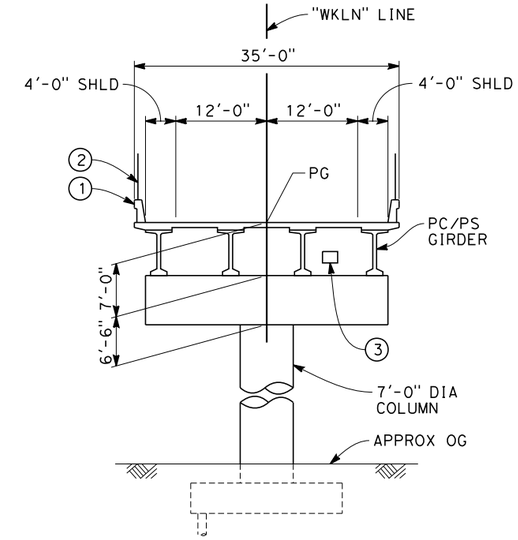

TYPICAL SECTION
SCALE: 1"=10'

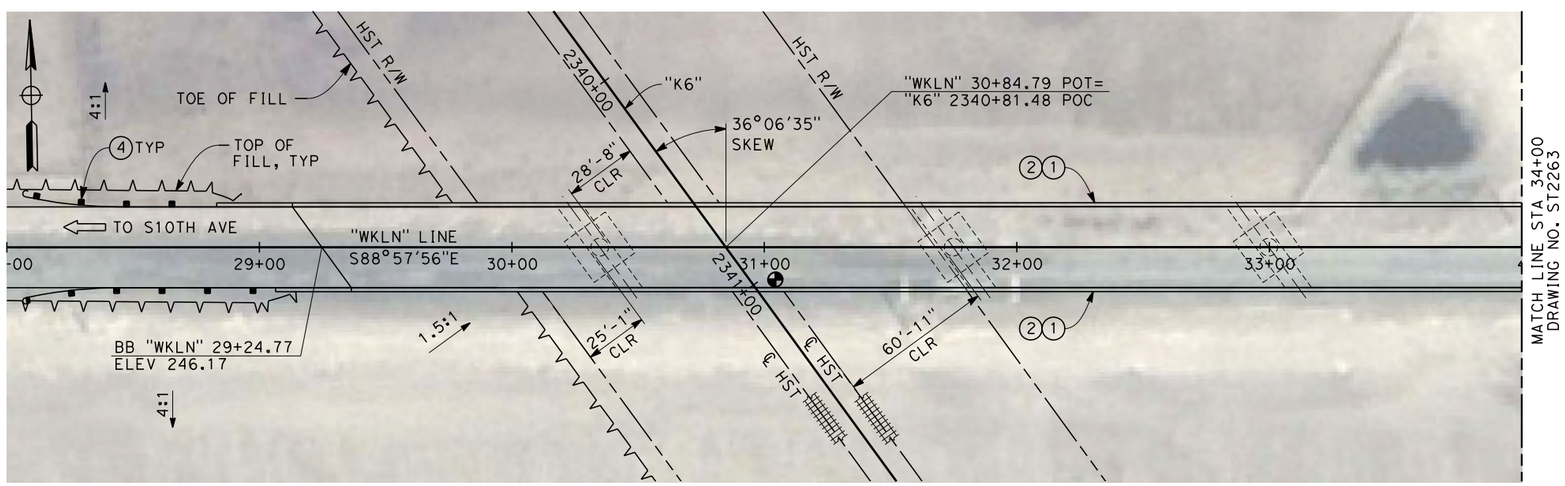

PLAN
SCALE: 1"=30'

NOTES:

1. ALL PILES NOT SHOWN
2. FOR MINIMUM VERTICAL CLEARANCESS, HORIZONTAL CURVE DATA, AND DETAILS NOT SHOWN, SEE ROADWAY PLAN.

LEGEND:

1. CONCRETE BARRIER WITH AR FENCE
2. AR FENCE WITH SOLID PLATE OVER HST
3. FUTURE UTILITY ENCASEMENT OPENING
4. MBGR

10 0 10 20
1"=10'

30 0 30 60
1"=30'

REV	DATE	BY	CHK	APP	DESCRIPTION

DESIGNED BY M. ANDREWS
DRAWN BY D. BARNHART
CHECKED BY B. LUSCOMBE
IN CHARGE R. COFFIN
DATE 12/31/13

RECORD SET 15% DESIGN SUBMISSION - NOT FOR CONSTRUCTION

URS | HMM | ARUP
CALIFORNIA HIGH-SPEED TRAIN

CALIFORNIA HIGH-SPEED RAIL AUTHORITY

CALIFORNIA HIGH-SPEED TRAIN PROJECT
FRESNO TO BAKERSFIELD
KAWEAH SUBSECTION
ALIGNMENT K6
OVERHEAD PLANNING STUDY
LANSING AVE

CONTRACT NO. HSR 06-0003
DRAWING NO. ST2262
SCALE AS SHOWN
SHEET NO. 4 OF 7

AND52110 12/19/2013 4:36:50 PM CAHSRP-r1.tbl CHSR_PDF_half_black.pltc:\pwworking\hmm\external\and52110\dms90297\FB-ST-2262-K6.dgn

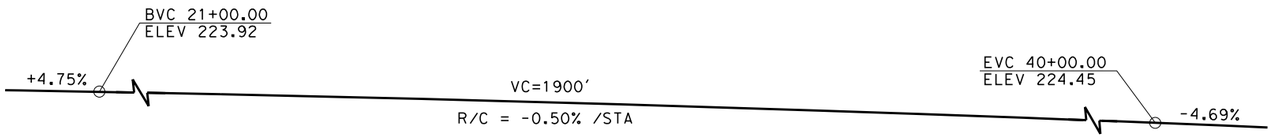

PROFILE GRADE
NO SCALE

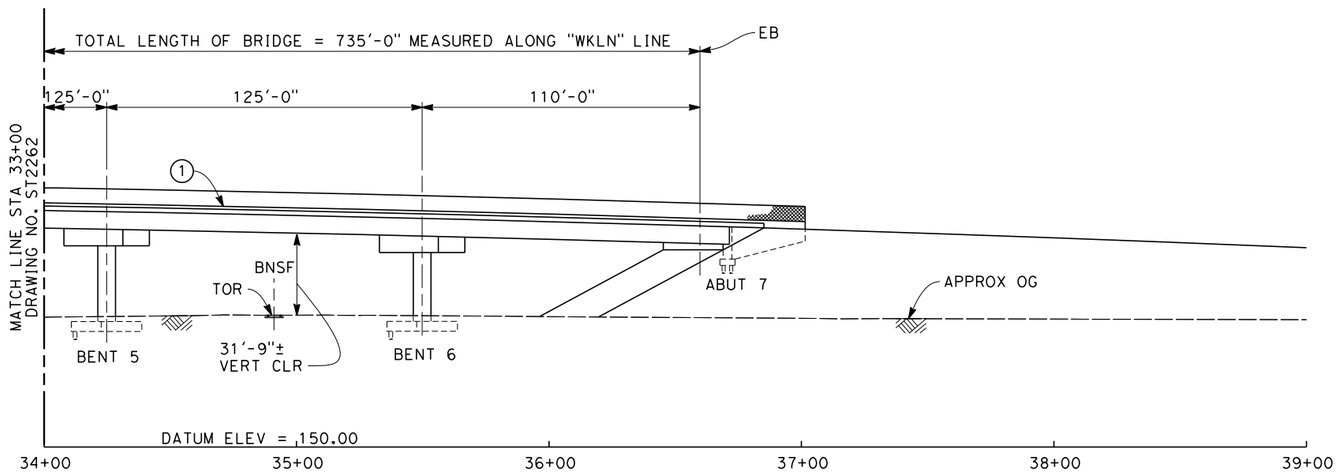

ELEVATION
SCALE: 1"=30'

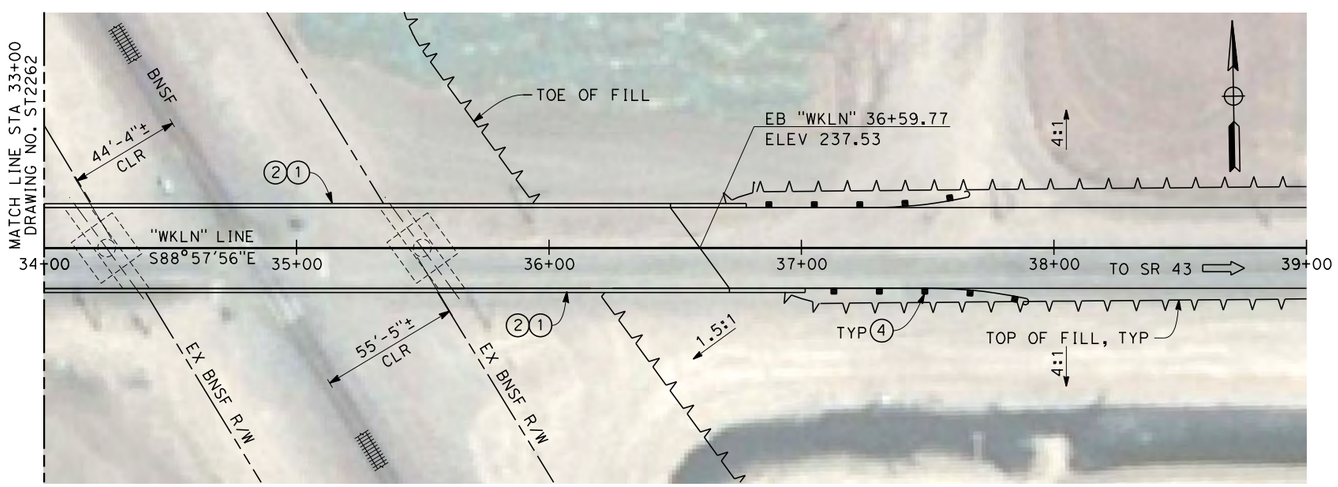

PLAN
SCALE: 1"=30'

NOTES:

1. ALL PILES NOT SHOWN
2. FOR MINIMUM VERTICAL CLEARANCESS, HORIZONTAL CURVE DATA, AND DETAILS NOT SHOWN, SEE ROADWAY PLANS.

LEGEND:

1. CONCRETE BARRIER WITH AR FENCE
2. AR FENCE WITH SOLID PLATE OVER HST
3. FUTURE UTILITY ENCASEMENT OPENING
4. MBGR

30 0 30 60
1"=30'

REV	DATE	BY	CHK	APP	DESCRIPTION

DESIGNED BY M. ANDREWS
DRAWN BY D. BARNHART
CHECKED BY B. LUSCOMBE
IN CHARGE R. COFFIN
DATE 12/31/13

RECORD SET 15% DESIGN SUBMISSION - NOT FOR CONSTRUCTION

URS | HMM | ARUP
CALIFORNIA HIGH-SPEED TRAIN

CALIFORNIA HIGH-SPEED RAIL AUTHORITY

CALIFORNIA HIGH-SPEED TRAIN PROJECT
FRESNO TO BAKERSFIELD
KAWEAH SUBSECTION
ALIGNMENT K6
OVERHEAD PLANNING STUDY
LANSING AVE

CONTRACT NO. HSR 06-0003
DRAWING NO. ST2263
SCALE AS SHOWN
SHEET NO. 5 OF 7

AND52110 12/19/2013 4:42:31 PM CAHSRP-r1.tbl CHSR_PDF_half_black.pltc:\pwworking\hmm\external\and52110\dms90297\FB-ST-2263-K6.dgn

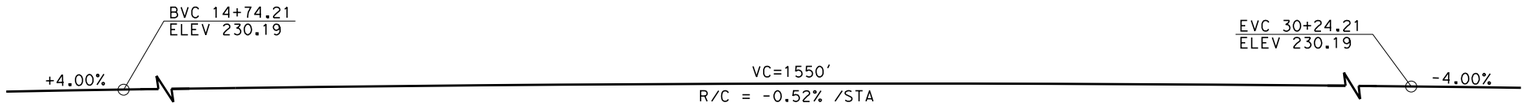

PROFILE GRADE
NO SCALE

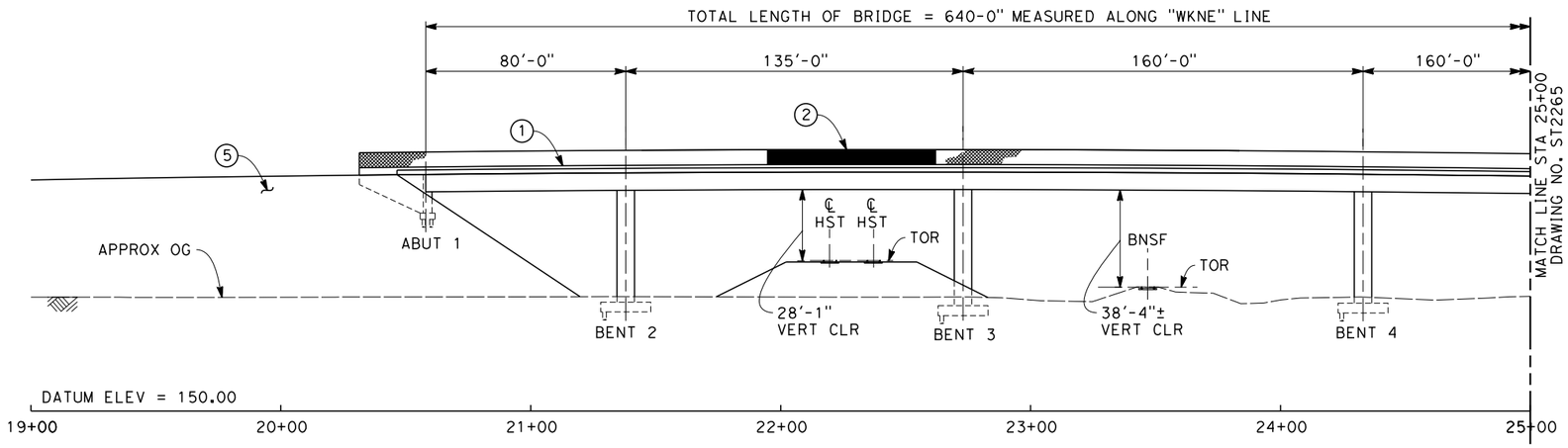

ELEVATION
SCALE: 1"=30'

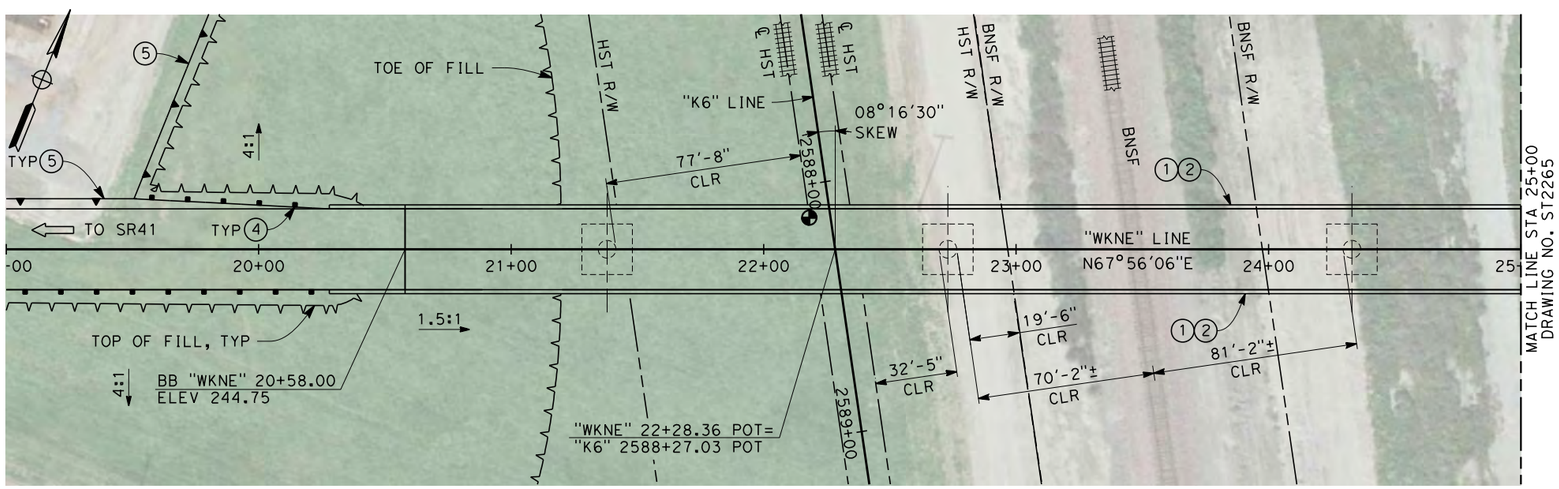

PLAN
SCALE: 1"=30'

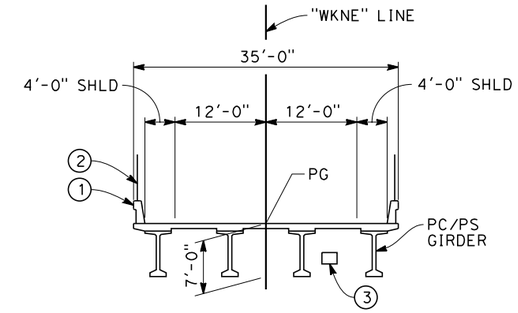

SECTION OVER BNSF

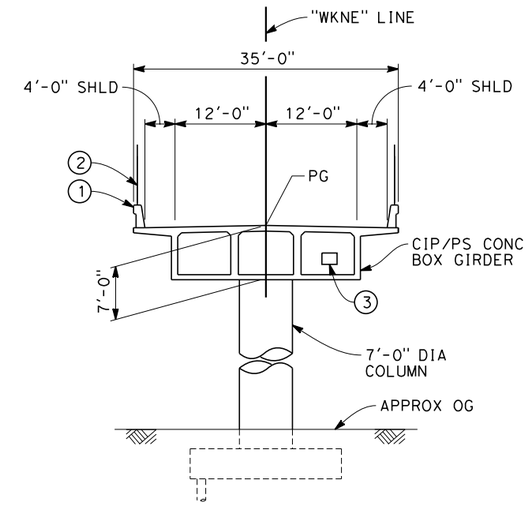

TYPICAL SECTION
SCALE: 1"=10'

NOTES:

1. ALL PILES NOT SHOWN
2. FOR MINIMUM VERTICAL CLEARANCESS, HORIZONTAL CURVE DATA, AND DETAILS NOT SHOWN, SEE ROADWAY PLANS.

LEGEND:

1. CONCRETE BARRIER WITH AR FENCE
2. AR FENCE WITH SOLID PLATE OVER HST
3. FUTURE UTILITY ENCASEMENT OPENING
4. MBGR
5. RETAINING WALL (SEE ROADWAY PLANS)

10 0 10 20 — 1"=10'

30 0 30 60 — 1"=30'

REV	DATE	BY	CHK	APP	DESCRIPTION

DESIGNED BY M. ANDREWS
DRAWN BY D. BARNHART
CHECKED BY B. LUSCOMBE
IN CHARGE R. COFFIN
DATE 12/31/13

RECORD SET 15% DESIGN SUBMISSION - NOT FOR CONSTRUCTION

URS | HMM | ARUP
CALIFORNIA HIGH-SPEED TRAIN

CALIFORNIA HIGH-SPEED RAIL AUTHORITY

CALIFORNIA HIGH-SPEED TRAIN PROJECT
FRESNO TO BAKERSFIELD
KAWEAH SUBSECTION
ALIGNMENT K6
OVERHEAD PLANNING STUDY
NEVADA AVE

CONTRACT NO. HSR 06-0003
DRAWING NO. ST2264
SCALE AS SHOWN
SHEET NO. 6 OF 7

AND52110 12/19/2013 4:51:18 PM CAHSRP-r1.tbl CHSR_PDF_half_black.pltc:\pwworking\hmm\external\and52110\dms90297\FB-ST-2264-K6.dgn

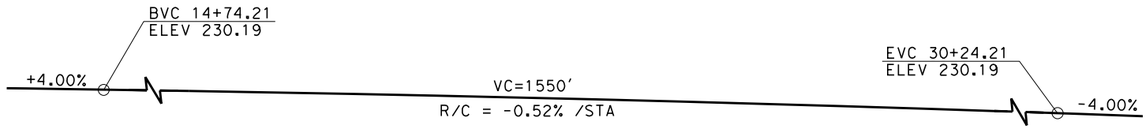

PROFILE GRADE
NO SCALE

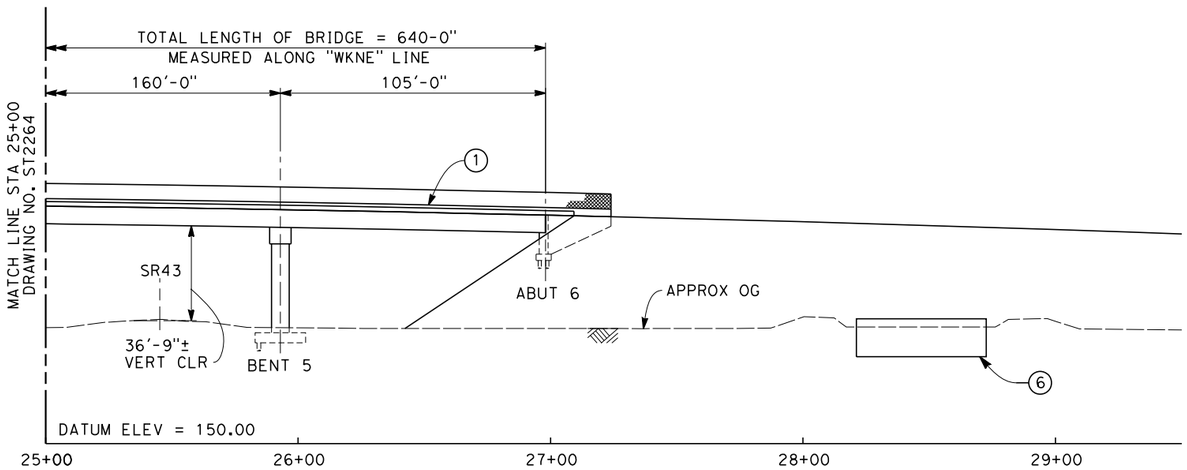

ELEVATION
SCALE: 1"=30'

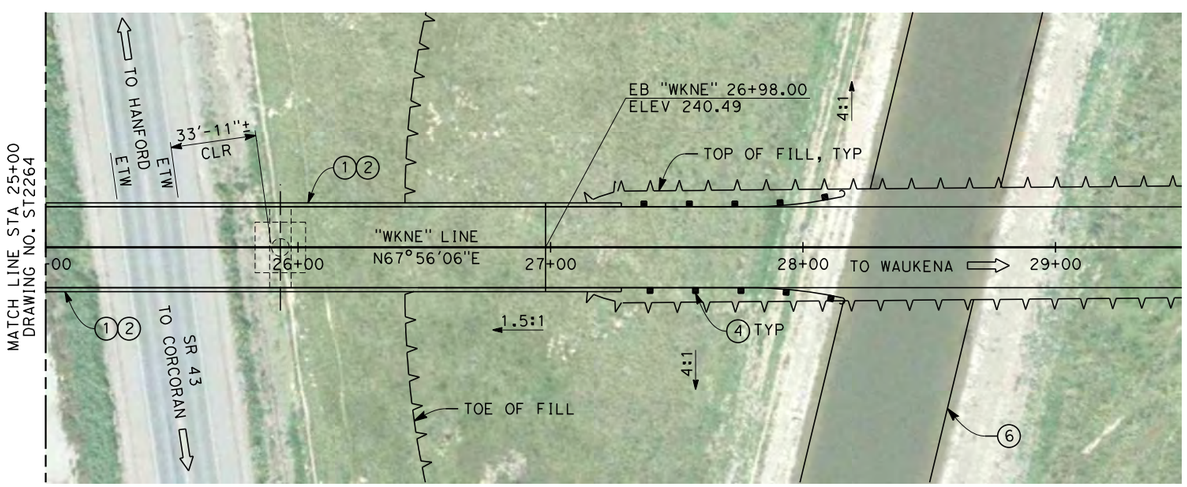

PLAN
SCALE: 1"=30'

NOTES:

1. ALL PILES NOT SHOWN
2. FOR MINIMUM VERTICAL CLEARANCESS, HORIZONTAL CURVE DATA, AND DETAILS NOT SHOWN, SEE ROADWAY PLANS.

LEGEND:

1. CONCRETE BARRIER WITH AR FENCE
2. AR FENCE WITH SOLID PLATE OVER HST
3. FUTURE UTILITY ENCASEMENT OPENING
4. MBGR
5. RETAINING WALL (SEE ROADWAY PLANS)
6. CULVERT (SEE ROADWAY PLANS)

30 0 30 60
1"=30'

REV	DATE	BY	CHK	APP	DESCRIPTION

DESIGNED BY M. ANDREWS
DRAWN BY D. BARNHART
CHECKED BY B. LUSCOMBE
IN CHARGE R. COFFIN
DATE 12/31/13

RECORD SET 15% DESIGN SUBMISSION - NOT FOR CONSTRUCTION

URS | HMM | ARUP
CALIFORNIA HIGH-SPEED TRAIN

CALIFORNIA HIGH-SPEED RAIL AUTHORITY

CALIFORNIA HIGH-SPEED TRAIN PROJECT
FRESNO TO BAKERSFIELD
KAWEAH SUBSECTION
ALIGNMENT K6
OVERHEAD PLANNING STUDY
NEVADA AVE

CONTRACT NO. HSR 06-0003
DRAWING NO. ST2265
SCALE AS SHOWN
SHEET NO. 7 OF 7

AND52110 12/19/2013 4:55:10 PM CAHSRP-r1.tbl CHSR_PDF_half_black.pltct:\pwworking\hmm\external\and52110\dms90297\FB-ST-2265-K6.dgn

REV	DATE	BY	CHK	APP	DESCRIPTION

DESIGNED BY L. SMITH
DRAWN BY D. BARNHART
CHECKED BY M. AMINI
IN CHARGE R. COFFIN
DATE 12/31/13

RECORD SET 15% DESIGN SUBMISSION - NOT FOR CONSTRUCTION

URS | HMM | ARUP
CALIFORNIA HIGH-SPEED TRAIN

CALIFORNIA HIGH-SPEED RAIL AUTHORITY

CALIFORNIA HIGH-SPEED TRAIN PROJECT
FRESNO TO BAKERSFIELD
CORCORAN SUBSECTION
ALIGNMENT C1
OVERHEAD PLANNING STUDY
KEY MAP

CONTRACT NO. HSR 06-0003
DRAWING NO. SB0070
SCALE AS SHOWN
SHEET NO. 1 OF 3

12/11/2013 12:18:16 PM c:\pwworking\hmm\external\bar59603\dms91104\FB-SB-0070-C1.dgn
BAR59603

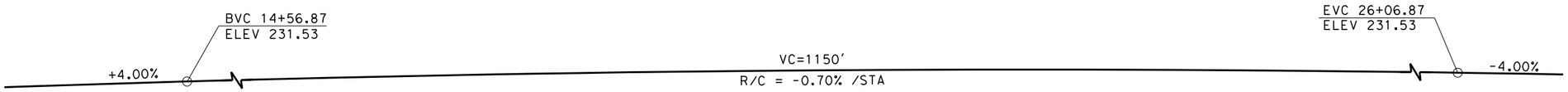

PROFILE GRADE
NO SCALE

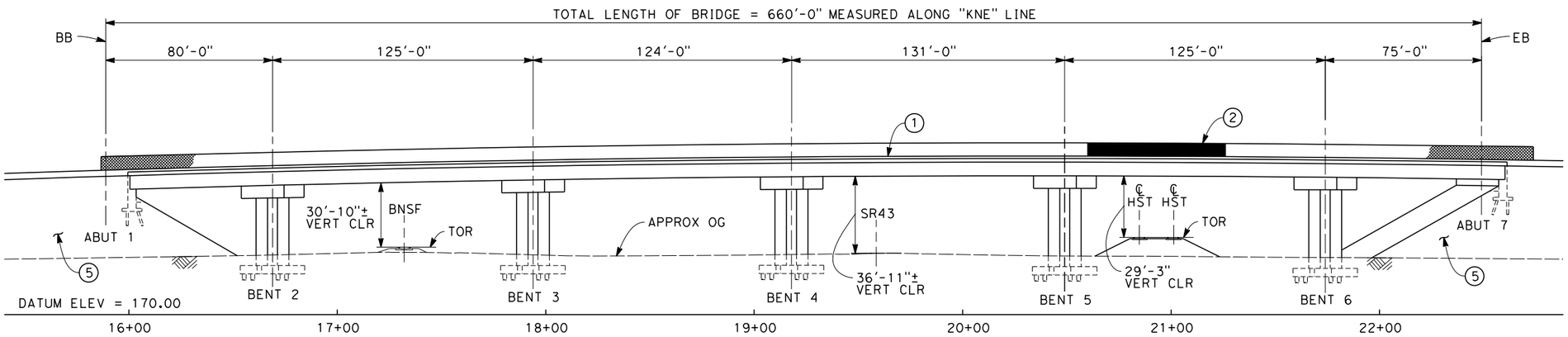

ELEVATION
SCALE: 1"=30'

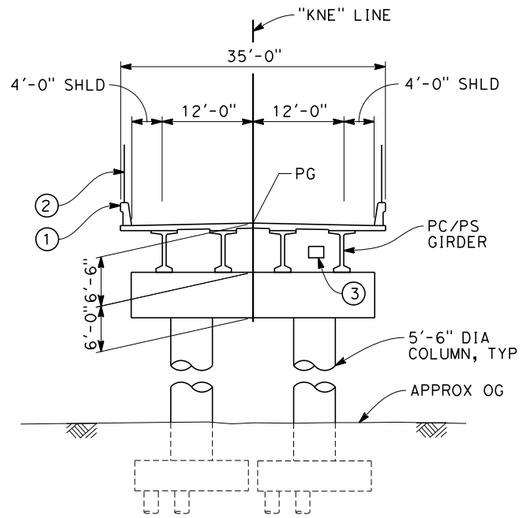

TYPICAL SECTION
SCALE: 1"=10'

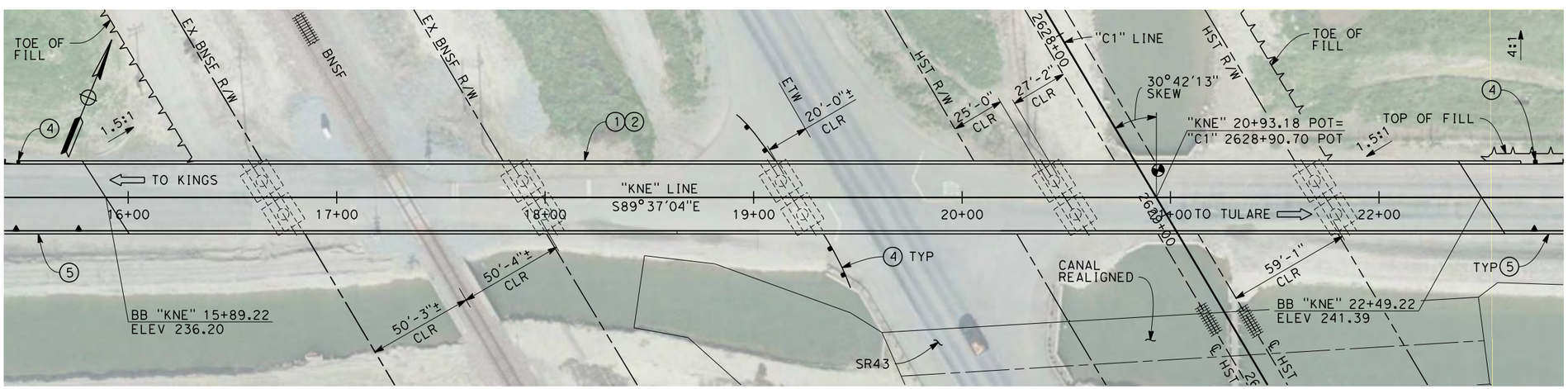

PLAN
SCALE: 1"=30'

NOTES:

1. ALL PILES NOT SHOWN
2. FOR MINIMUM VERTICAL CLEARANCES, HORIZONTAL CURVE DATA, AND DETAILS NOT SHOWN, SEE ROADWAY PLANS.

LEGEND:

1. CONCRETE BARRIER WITH AR FENCE
2. AR FENCE WITH SOLID PLATE OVER HST
3. FUTURE UTILITY ENCASEMENT OPENING
4. MBGR
5. RETAINING WALL, TYPE TO BE DETERMINED

10 0 10 20 — 1"=10'

30 0 30 60 — 1"=30'

REV	DATE	BY	CHK	APP	DESCRIPTION

DESIGNED BY L. SMITH
DRAWN BY T. PRETZER
CHECKED BY M. AMINI
IN CHARGE R. COFFIN
DATE 12/31/13

RECORD SET 15% DESIGN SUBMISSION - NOT FOR CONSTRUCTION

URS | HMM | ARUP
CALIFORNIA HIGH-SPEED TRAIN

CALIFORNIA HIGH-SPEED RAIL AUTHORITY

CALIFORNIA HIGH-SPEED TRAIN PROJECT
FRESNO TO BAKERSFIELD
CORCORAN BYPASS SUBSECTION
ALIGNMENT C1
OVERHEAD PLANNING STUDY
NEVADA AVE

CONTRACT NO. HSR 06-0003
DRAWING NO. ST2230
SCALE AS SHOWN
SHEET NO. 2 OF 3

12/27/2013 9:59:42 AM c:\pwworking\hmm\external\pro39009\dms91104\FB-ST-2230-C1.dgn
Clark

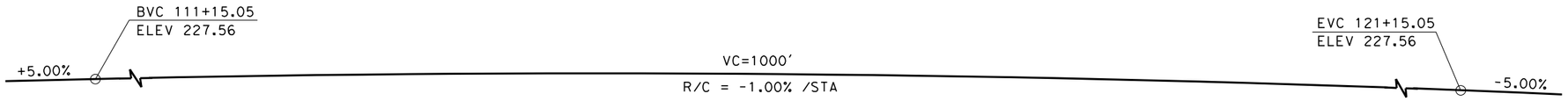

PROFILE GRADE
NO SCALE

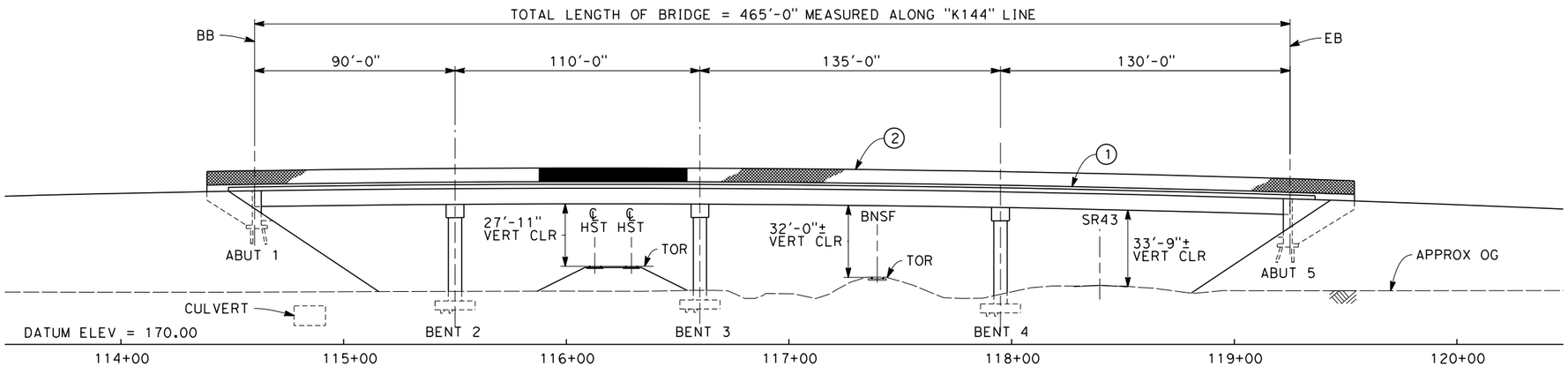

ELEVATION
SCALE: 1"=30'

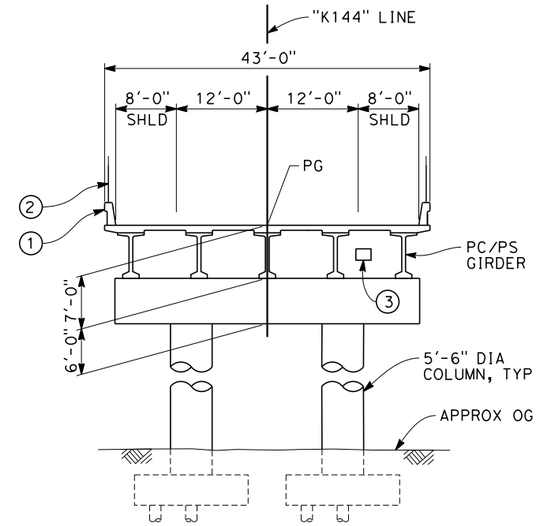

TYPICAL SECTION
SCALE: 1"=10'

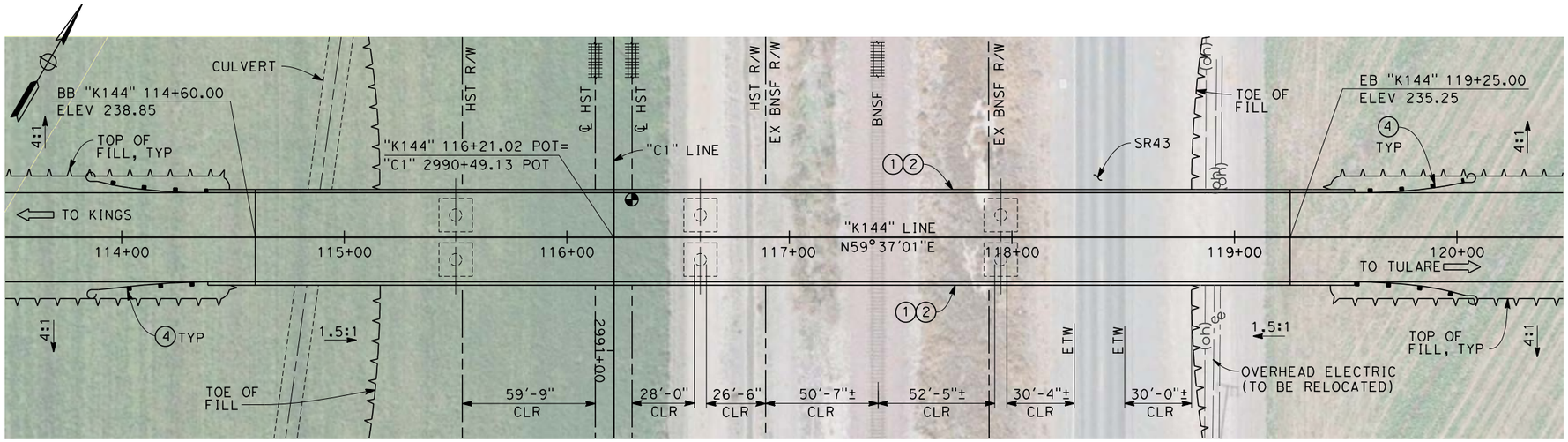

PLAN
SCALE: 1"=30'

NOTES:

1. ALL PILES NOT SHOWN
2. FOR MINIMUM VERTICAL CLEARANCES, HORIZONTAL CURVE DATA, AND DETAILS NOT SHOWN, SEE ROADWAY PLANS.

LEGEND:

1. CONCRETE BARRIER WITH AR FENCE
2. AR FENCE WITH SOLID PLATE OVER HST
3. FUTURE UTILITY ENCASEMENT OPENING
4. MBGR

10 0 10 20 — 1"=10'

30 0 30 60 — 1"=30'

REV	DATE	BY	CHK	APP	DESCRIPTION

DESIGNED BY L. SMITH
DRAWN BY D. BARNHART
CHECKED BY M. AMINI
IN CHARGE R. COFFIN
DATE 12/31/13

RECORD SET 15% DESIGN SUBMISSION - NOT FOR CONSTRUCTION

URS | HMM | ARUP — CALIFORNIA HIGH-SPEED TRAIN

CALIFORNIA HIGH-SPEED RAIL AUTHORITY

CALIFORNIA HIGH-SPEED TRAIN PROJECT
FRESNO TO BAKERSFIELD
CORCORAN SUBSECTION
ALIGNMENT C1
OVERHEAD PLANNING STUDY
AVE 144

CONTRACT NO. HSR 06-0003
DRAWING NO. ST2232
SCALE AS SHOWN
SHEET NO. 3 OF 3

12/27/2013 9:50:40 AM c:\pwworking\hmm\external\pro39009\dms91104\FB-ST-2232-C1.dgn
Clark

REV	DATE	BY	CHK	APP	DESCRIPTION

DESIGNED BY L. SMITH
DRAWN BY D. BARNHART
CHECKED BY M. AMINI
IN CHARGE R. COFFIN
DATE 12/31/13

RECORD SET 15% DESIGN SUBMISSION - NOT FOR CONSTRUCTION

URS | HMM | ARUP
CALIFORNIA HIGH-SPEED TRAIN

CALIFORNIA HIGH-SPEED RAIL AUTHORITY

CALIFORNIA HIGH-SPEED TRAIN PROJECT
FRESNO TO BAKERSFIELD
CORCORAN BYPASS SUBSECTION
ALIGNMENT C2
OVERHEAD PLANNING STUDY
KEY MAP

CONTRACT NO. HSR 06-0003
DRAWING NO. SB0075
SCALE AS SHOWN
SHEET NO. 1 OF 3

12/11/2013 11:57:10 AM c:\pwworking\hmm\external\bar59603\dms91105\FB-SB-0075-C2.dgn
BAR59603

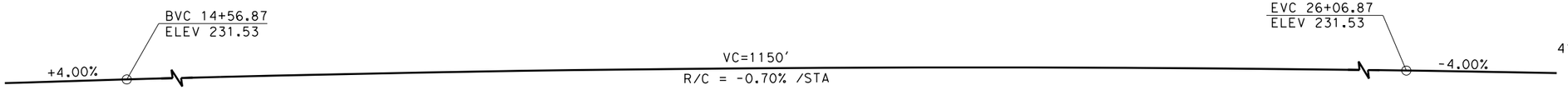

PROFILE GRADE
NO SCALE

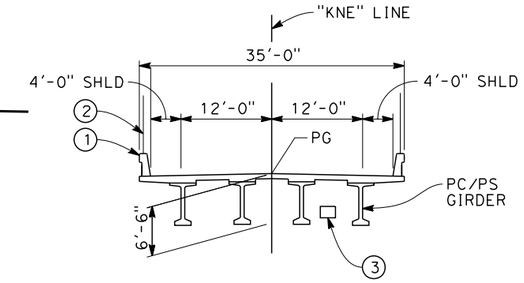

SECTION OVER BNSF

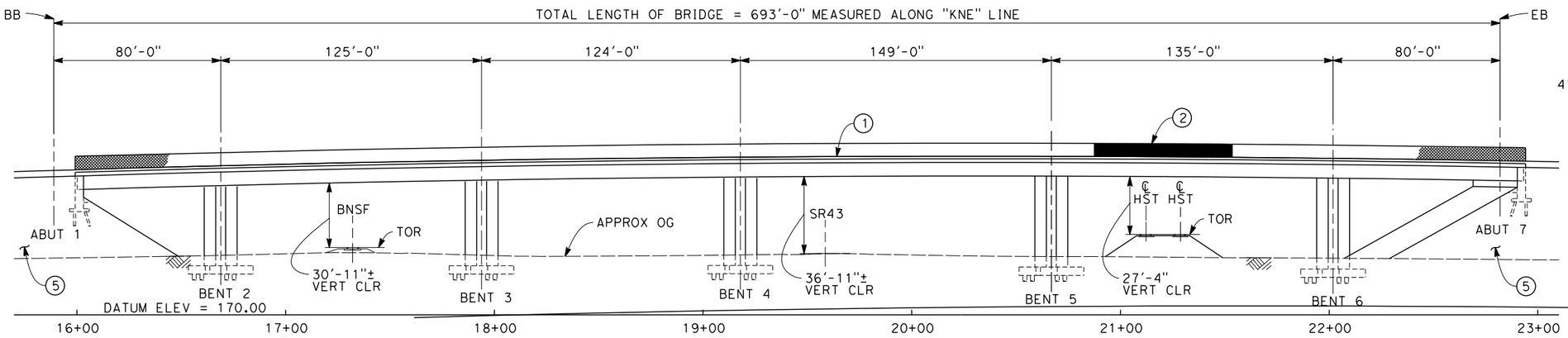

ELEVATION
SCALE: 1"=30'

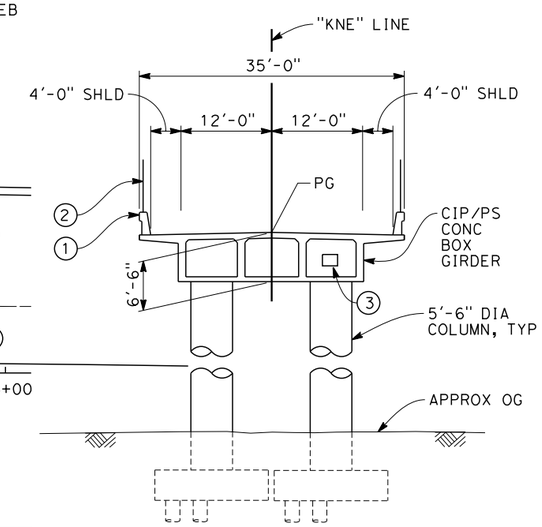

TYPICAL SECTION
SCALE: 1"=10'

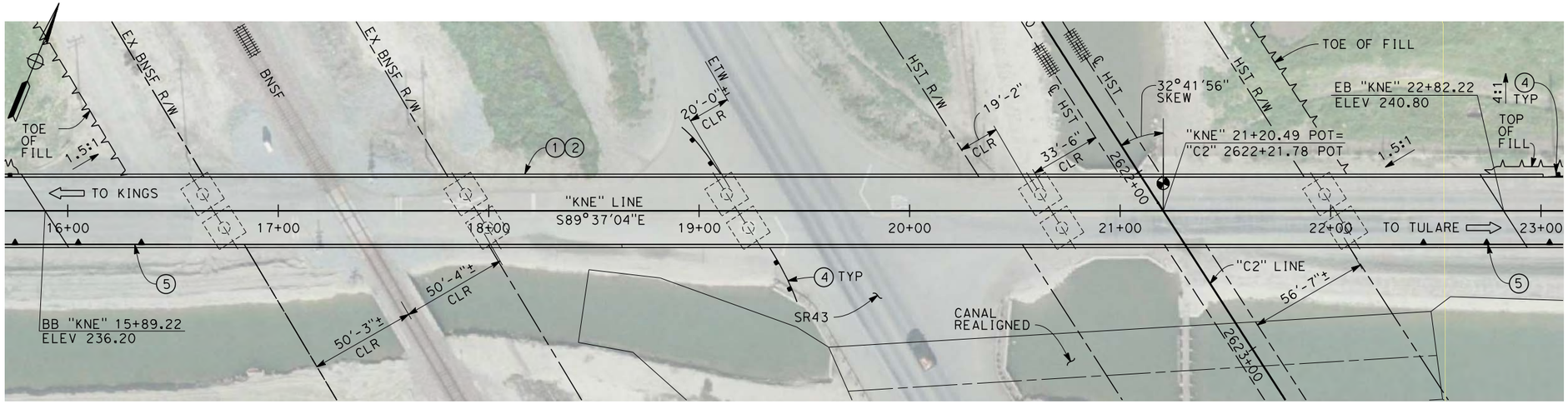

PLAN
SCALE: 1"=30'

NOTES:

1. ALL PILES NOT SHOWN
2. FOR MINIMUM VERTICAL CLEARANCES, HORIZONTAL CURVE DATA, AND DETAILS NOT SHOWN, SEE ROADWAY PLANS.

LEGEND:

1. CONCRETE BARRIER WITH AR FENCE
2. AR FENCE WITH SOLID PLATE OVER HST
3. FUTURE UTILITY ENCASEMENT OPENING
4. MBGR
5. RETAINING WALL, TO BE DETERMINED

10 0 10 20 — 1"=10'

30 0 30 60 — 1"=30'

REV	DATE	BY	CHK	APP	DESCRIPTION

DESIGNED BY E. MORAN
DRAWN BY D. BARNHART
CHECKED BY M. AMINI
IN CHARGE R. COFFIN
DATE 12/31/13

RECORD SET 15% DESIGN SUBMISSION - NOT FOR CONSTRUCTION

URS | HMM | ARUP
CALIFORNIA HIGH-SPEED TRAIN

CALIFORNIA HIGH-SPEED RAIL AUTHORITY

CALIFORNIA HIGH-SPEED TRAIN PROJECT
FRESNO TO BAKERSFIELD
CORCORAN BYPASS SUBSECTION
ALIGNMENT C2
OVERHEAD PLANNING STUDY
NEVADA AVE

CONTRACT NO. HSR 06-0003
DRAWING NO. ST2239
SCALE AS SHOWN
SHEET NO. 2 OF 3

$USER$ $DATE$ $TIME$ $FILE$

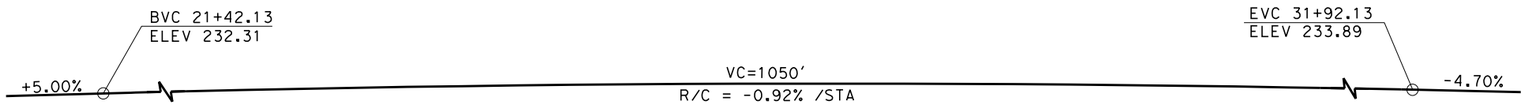

PROFILE GRADE
NO SCALE

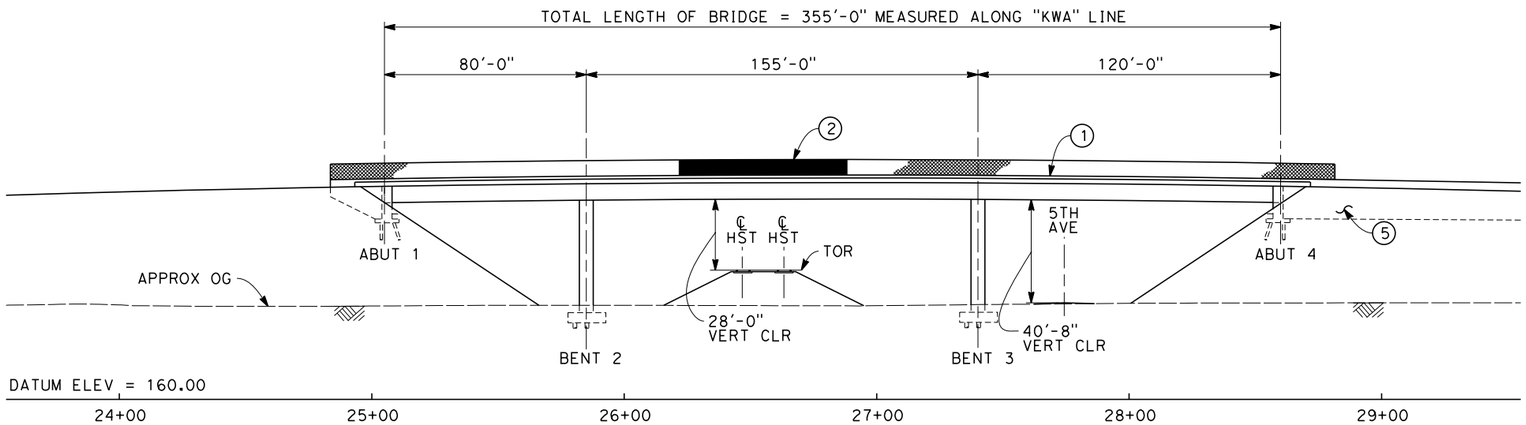

ELEVATION
SCALE: 1"=30'

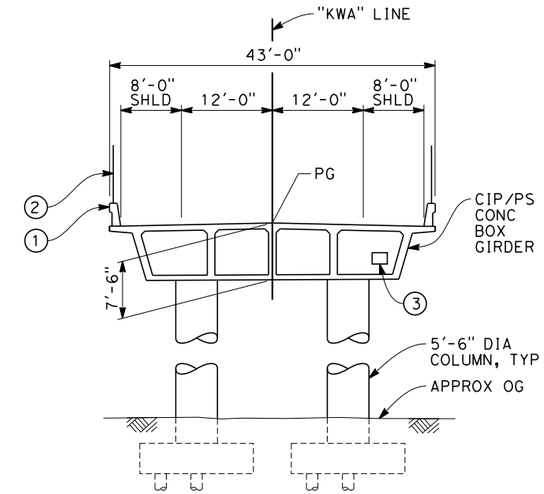

TYPICAL SECTION
SCALE: 1"=10'

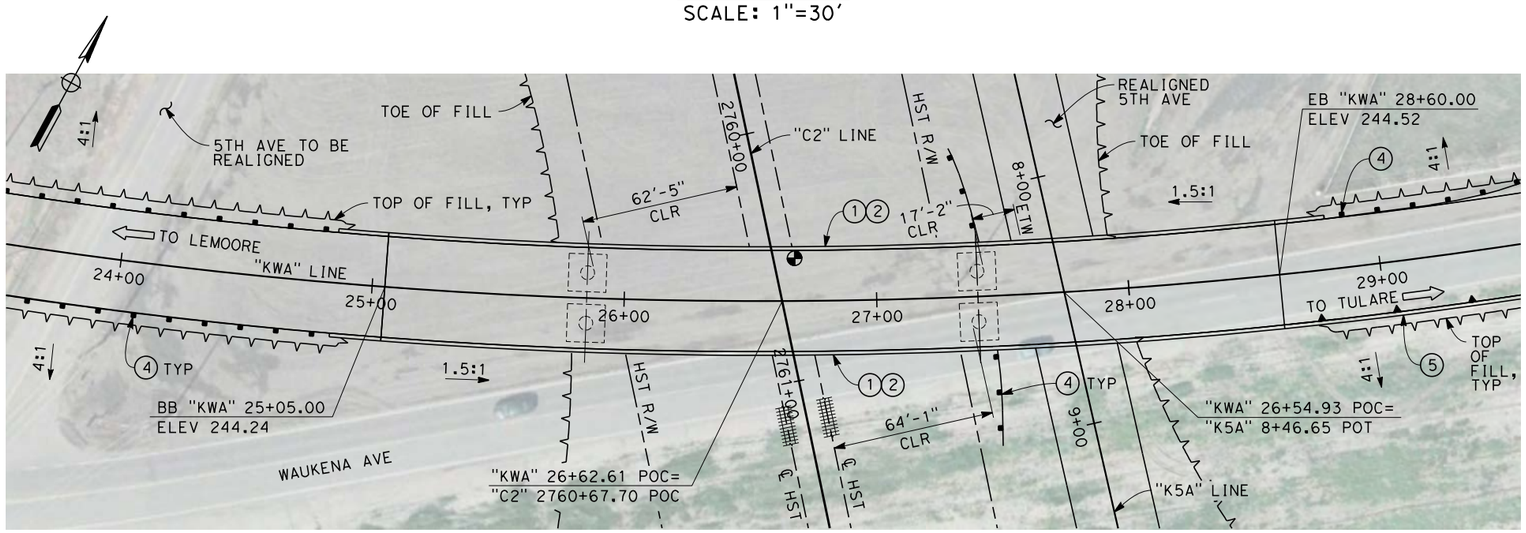

PLAN
SCALE: 1"=30'

NOTES:

1. ALL PILES NOT SHOWN
2. FOR MINIMUM VERTICAL CLEARANCES, HORIZONTAL CURVE DATA, AND DETAILS NOT SHOWN, SEE ROADWAY PLANS.

LEGEND:

1. CONCRETE BARRIER WITH AR FENCE
2. AR FENCE WITH SOLID PLATE OVER HST
3. FUTURE UTILITY ENCASEMENT OPENING
4. MBGR
5. RETAINING WALL, TYPE TO BE DETERMINED

10 0 10 20 — 1"=10'

30 0 30 60 — 1"=30'

REV	DATE	BY	CHK	APP	DESCRIPTION

DESIGNED BY E. MORAN
DRAWN BY D. BARNHART
CHECKED BY M. AMINI
IN CHARGE R. COFFIN
DATE 12/31/13

RECORD SET 15% DESIGN SUBMISSION - NOT FOR CONSTRUCTION

URS | HMM | ARUP
CALIFORNIA HIGH-SPEED TRAIN

CALIFORNIA HIGH-SPEED RAIL AUTHORITY

CALIFORNIA HIGH-SPEED TRAIN PROJECT
FRESNO TO BAKERSFIELD
CORCORAN BYPASS SUBSECTION
ALIGNMENT C2
OVERHEAD PLANNING STUDY
CORCORAN HWY

CONTRACT NO. HSR 06-0003
DRAWING NO. ST2244
SCALE AS SHOWN
SHEET NO. 3 OF 3

12/27/2013 10:21:32 AM c:\pwworking\hmm\external\pro39009\dms91105\FB-ST-2244-C2.dgn
Clark

REV	DATE	BY	CHK	APP	DESCRIPTION

DESIGNED BY E. MORAN
DRAWN BY P. BARBER
CHECKED BY B. LUSCOMBE
IN CHARGE R. COFFIN
DATE 12/31/13

RECORD SET 15% DESIGN SUBMISSION
-
NOT FOR CONSTRUCTION

URS | HMM | ARUP
CALIFORNIA HIGH-SPEED TRAIN

CALIFORNIA HIGH-SPEED RAIL AUTHORITY

CALIFORNIA HIGH-SPEED TRAIN PROJECT
FRESNO TO BAKERSFIELD
CORCORAN SUBSECTION
ALIGNMENT C3
OVERHEAD PLANNING STUDY
KEY MAP

CONTRACT NO. HSR 06-0003
DRAWING NO. SB0080
SCALE AS SHOWN
SHEET NO. 1 OF 4

12/27/2013 12:56:29 PM c:\pwworking\hmm\external\bar59603\dms92033\FB-SB-0080-C3.dgn
BAR59603

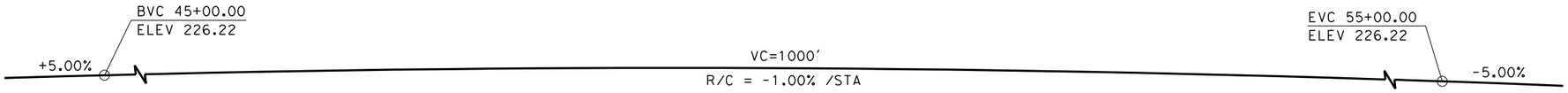

PROFILE GRADE
NO SCALE

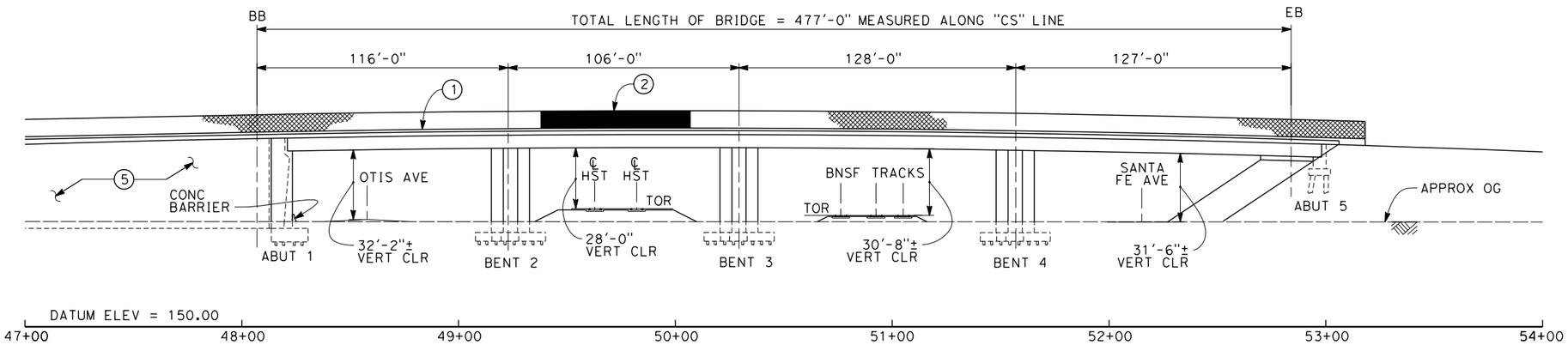

ELEVATION
SCALE: 1"=30'

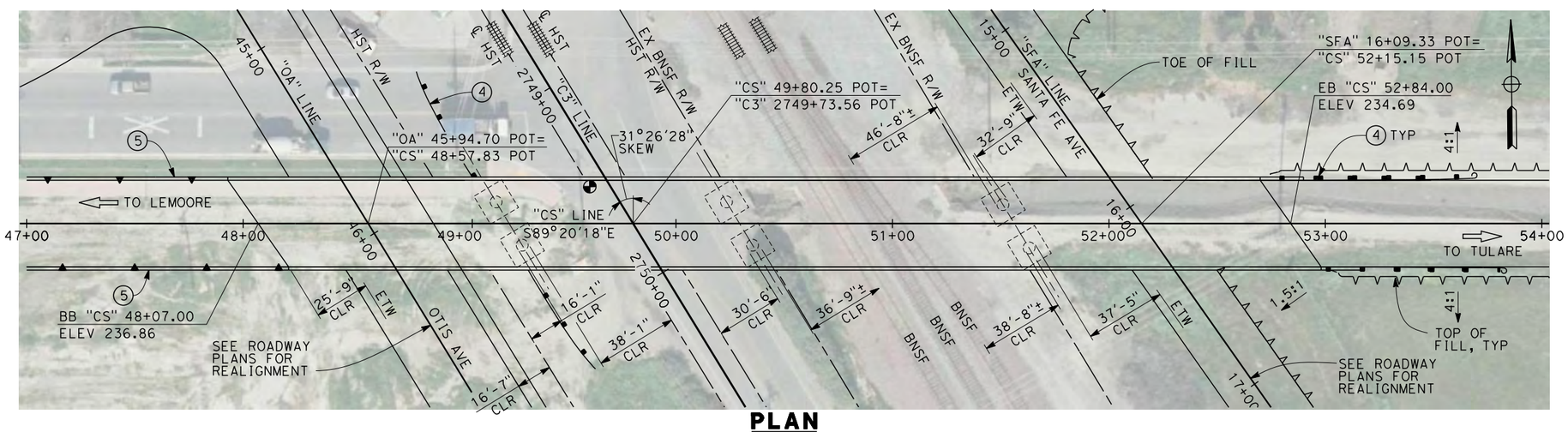

PLAN
SCALE: 1"=30'

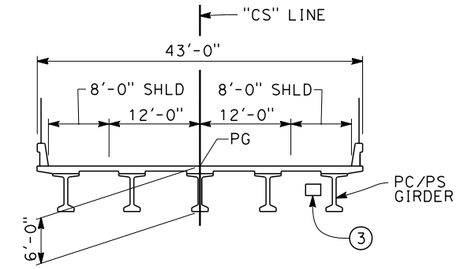

SECTION OVER BNSF

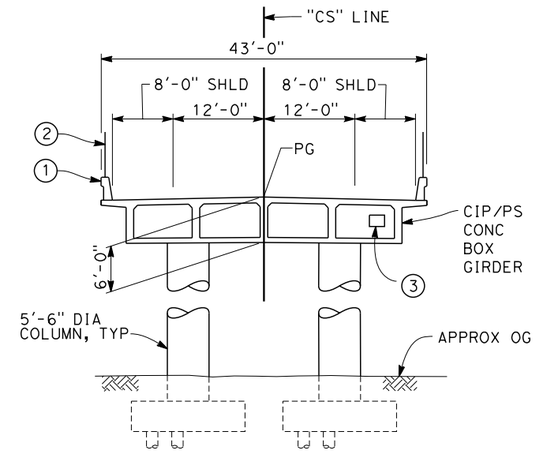

TYPICAL SECTION
SCALE: 1"=10'

NOTES:

1. ALL PILES NOT SHOWN
2. FOR MINIMUM VERTICAL CLEARANCES, HORIZONTAL CURVE DATA, AND DETAILS NOT SHOWN, SEE ROADWAY PLANS.

LEGEND:

1. CONCRETE BARRIER WITH AR FENCE
2. AR FENCE WITH SOLID PLATE OVER HST
3. FUTURE UTILITY ENCASEMENT OPENING
4. MBGR
5. RETAINING WALL

10 0 10 20 — 1"=10'
30 0 30 60 — 1"=30'

REV	DATE	BY	CHK	APP	DESCRIPTION

DESIGNED BY E. MORAN
DRAWN BY D. BARNHART
CHECKED BY B. LUSCOMBE
IN CHARGE R. COFFIN
DATE 12/31/13

RECORD SET 15% DESIGN SUBMISSION - NOT FOR CONSTRUCTION

URS | HMM | ARUP — CALIFORNIA HIGH-SPEED TRAIN

CALIFORNIA HIGH-SPEED RAIL AUTHORITY

CALIFORNIA HIGH-SPEED TRAIN PROJECT
FRESNO TO BAKERSFIELD
CORCORAN SUBSECTION
ALIGNMENT C3
OVERHEAD PLANNING STUDY
CHARLES ST

CONTRACT NO. HSR 06-0003
DRAWING NO. ST2271
SCALE AS SHOWN
SHEET NO. 2 OF 4

BAR59603 12/27/2013 3:21:39 PM CAHSRP-r1.tbl CHSR_PDF_half_block_2000.pwt d:\bar59603\dms92033\VFB-ST-2271-C3.dgn

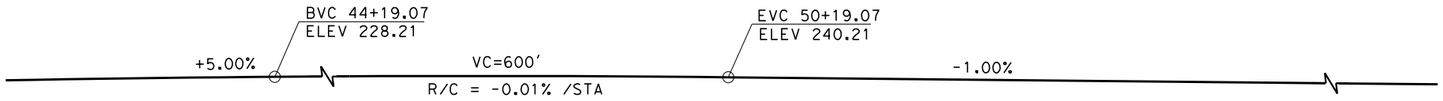

PROFILE GRADE
NO SCALE

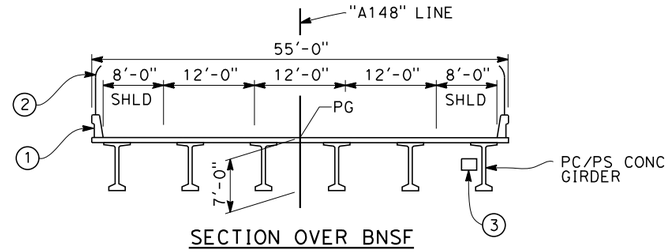

SECTION OVER BNSF

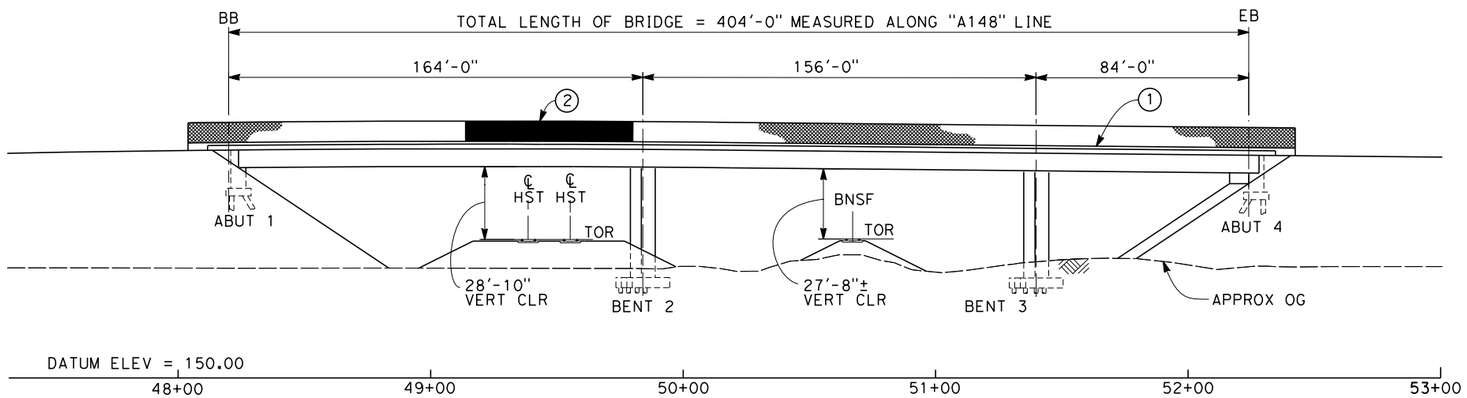

ELEVATION
SCALE: 1"=30'

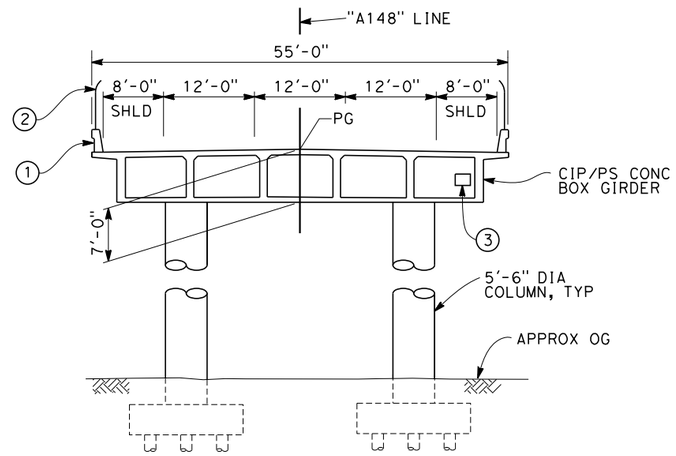

TYPICAL SECTION
SCALE: 1"=10'

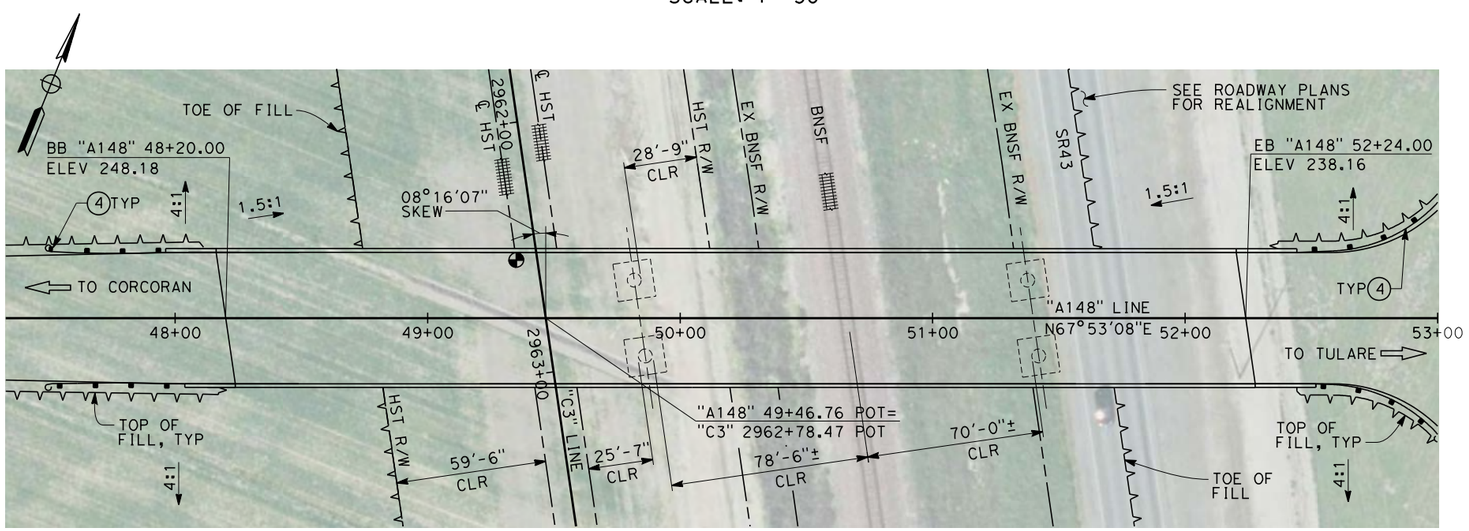

PLAN
SCALE: 1"=30'

NOTES:

1. ALL PILES NOT SHOWN
2. FOR MINIMUM VERTICAL CLEARANCES, HORIZONTAL CURVE DATA, AND DETAILS NOT SHOWN, SEE ROADWAY PLANS.

LEGEND:

1. CONCRETE BARRIER WITH AR FENCE
2. AR FENCE WITH SOLID PLATE OVER HST
3. FUTURE UTILITY ENCASEMENT OPENING
4. MBGR
5. RETAINING WALL

10 0 10 20 — 1"=10'
30 0 30 60 — 1"=30'

REV	DATE	BY	CHK	APP	DESCRIPTION

DESIGNED BY E. MORAN
DRAWN BY D. BARNHART
CHECKED BY B. LUSCOMBE
IN CHARGE R. COFFIN
DATE 12/31/13

RECORD SET 15% DESIGN SUBMISSION - NOT FOR CONSTRUCTION

URS | HMM | ARUP
CALIFORNIA HIGH-SPEED TRAIN

CALIFORNIA HIGH-SPEED RAIL AUTHORITY

CALIFORNIA HIGH-SPEED TRAIN PROJECT
FRESNO TO BAKERSFIELD
CORCORAN SUBSECTION
ALIGNMENT C3
OVERHEAD PLANNING STUDY
AVE 148 WEST

CONTRACT NO. HSR 06-0003
DRAWING NO. ST2281
SCALE AS SHOWN
SHEET NO. 3 OF 4

BAR50597 12/23/2013 01:45:02 AM CAHSRP-r1.tbl CHSR_PDF_half_black.pltc:\pwworking\hmm\external\bar50597\dms92033\FB-ST-2281-C3.dgn

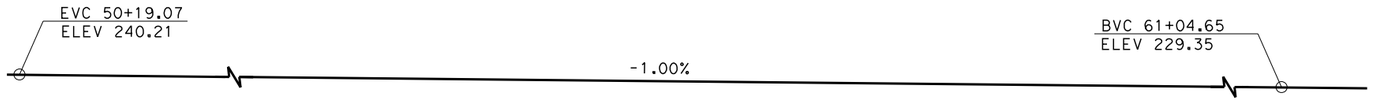

PROFILE GRADE
NO SCALE

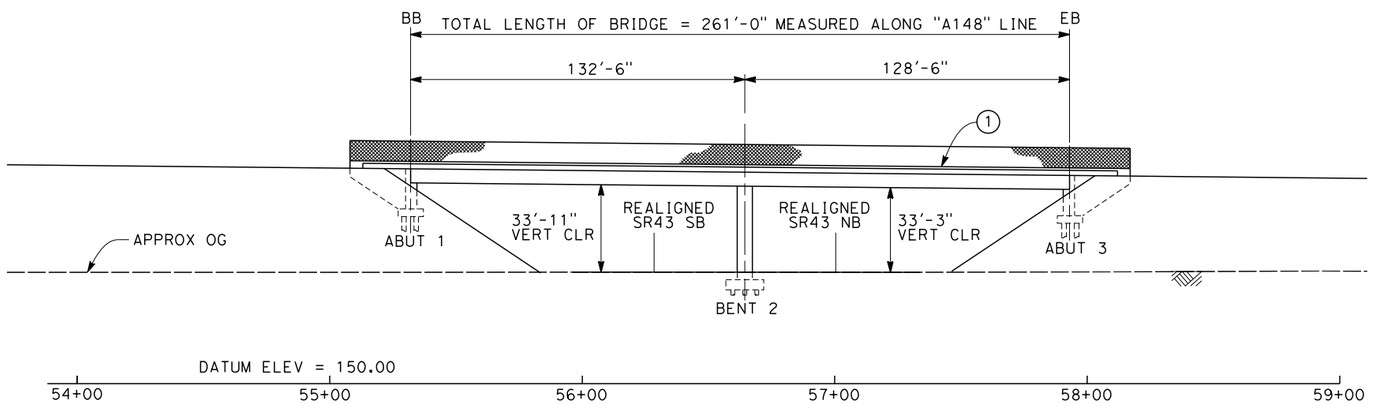

ELEVATION
SCALE: 1"=30'

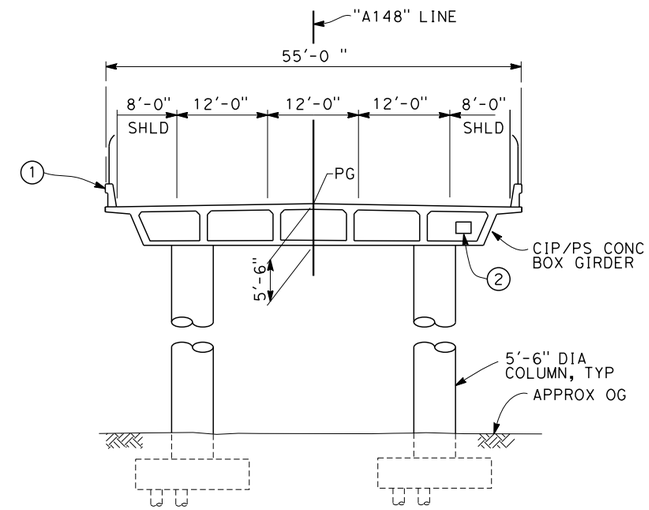

TYPICAL SECTION
SCALE: 1"=10'

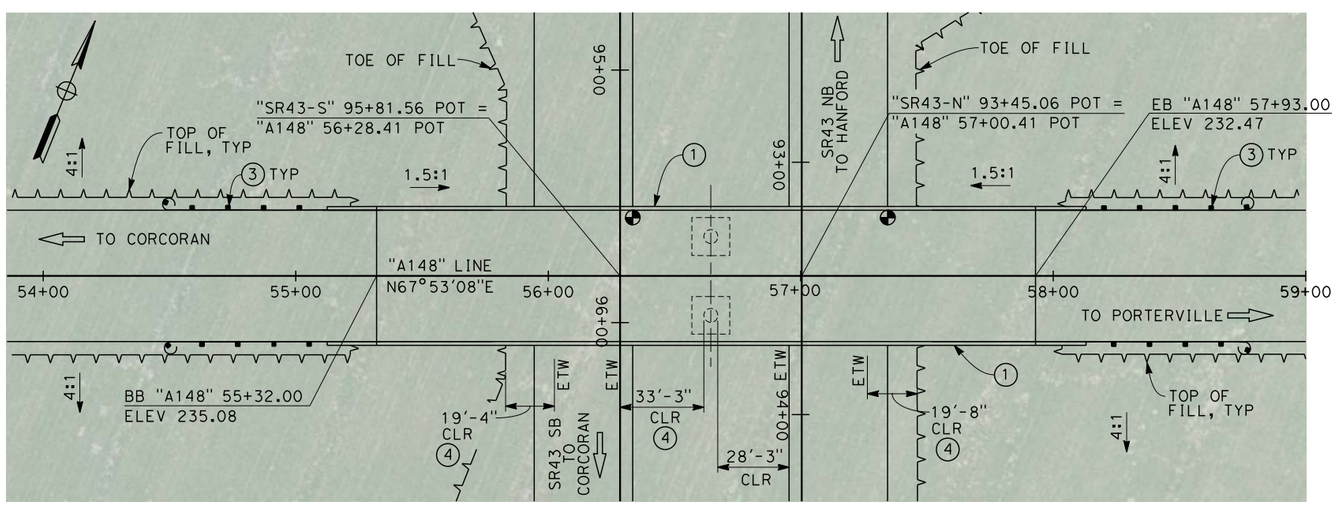

PLAN
SCALE: 1"=30'

NOTES:

1. ALL PILES NOT SHOWN
2. FOR MINIMUM VERTICAL CLEARANCES, HORIZONTAL CURVE DATA, AND DETAILS NOT SHOWN, SEE ROADWAY PLANS.

LEGEND:

1. CONCRETE BARRIER WITH AR FENCE
2. FUTURE UTILITY ENCASEMENT OPENING
3. MBGR
4. MINIMUM DISTANCE AND VARIES

10 0 10 20 — 1"=10'

30 0 30 60 — 1"=30'

REV	DATE	BY	CHK	APP	DESCRIPTION

DESIGNED BY E. MORAN
DRAWN BY D. BARNHART
CHECKED BY B. LUSCOMBE
IN CHARGE R. COFFIN
DATE 12/31/13

RECORD SET 15% DESIGN SUBMISSION - NOT FOR CONSTRUCTION

URS | HMM | ARUP
CALIFORNIA HIGH-SPEED TRAIN

CALIFORNIA HIGH-SPEED RAIL AUTHORITY

CALIFORNIA HIGH-SPEED TRAIN PROJECT
FRESNO TO BAKERSFIELD
CORCORAN SUBSECTION
ALIGNMENT C3
OVERHEAD PLANNING STUDY
AVE 148 EAST

CONTRACT NO. HSR-06-0003
DRAWING NO. ST2282
SCALE AS SHOWN
SHEET NO. 4 OF 4

MOR45030 12/26/2013 9:52:55 AM CAHSRP-r1.tbl CHSR_PDF_half_black_200.pltcfg pw:\\mor45030\dms92033\FB-ST-2282-C3.dgn

REV	DATE	BY	CHK	APP	DESCRIPTION

DESIGNED BY B. LUSCOMBE
DRAWN BY D. BARNHART
CHECKED BY E. MORAN
IN CHARGE R. COFFIN
DATE 12/31/13

RECORD SET 15% DESIGN SUBMISSION - NOT FOR CONSTRUCTION

URS | HMM | ARUP
CALIFORNIA HIGH-SPEED TRAIN

CALIFORNIA
HIGH-SPEED RAIL AUTHORITY

CALIFORNIA HIGH-SPEED TRAIN PROJECT
FRESNO TO BAKERSFIELD
PIXLEY SUBSECTION
ALIGNMENT P
OVERHEAD PLANNING STUDY
KEY MAP

CONTRACT NO. HSR 06-0003
DRAWING NO. SB0090
SCALE AS SHOWN
SHEET NO. 1 OF 5

BAR59603 12/27/2013 11:40:53 AM CAHSRP-r1.tbl CHSR_PDF_half_black_200dpi.pwr cdp_working\hmm\external\bar59603\dms95080\FB-SB-0090-P.dgn

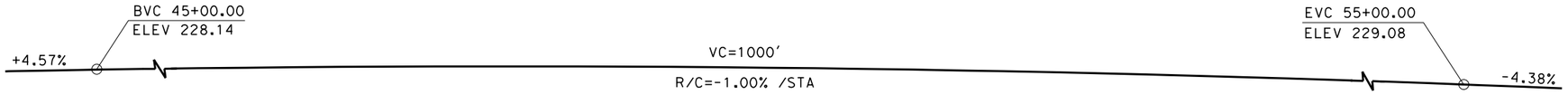

PROFILE GRADE
NO SCALE

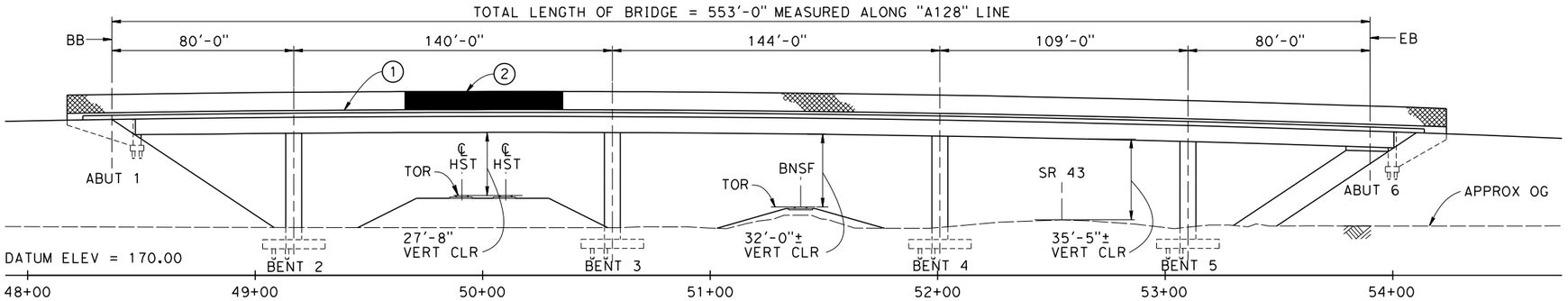

ELEVATION
SCALE:1"=30'

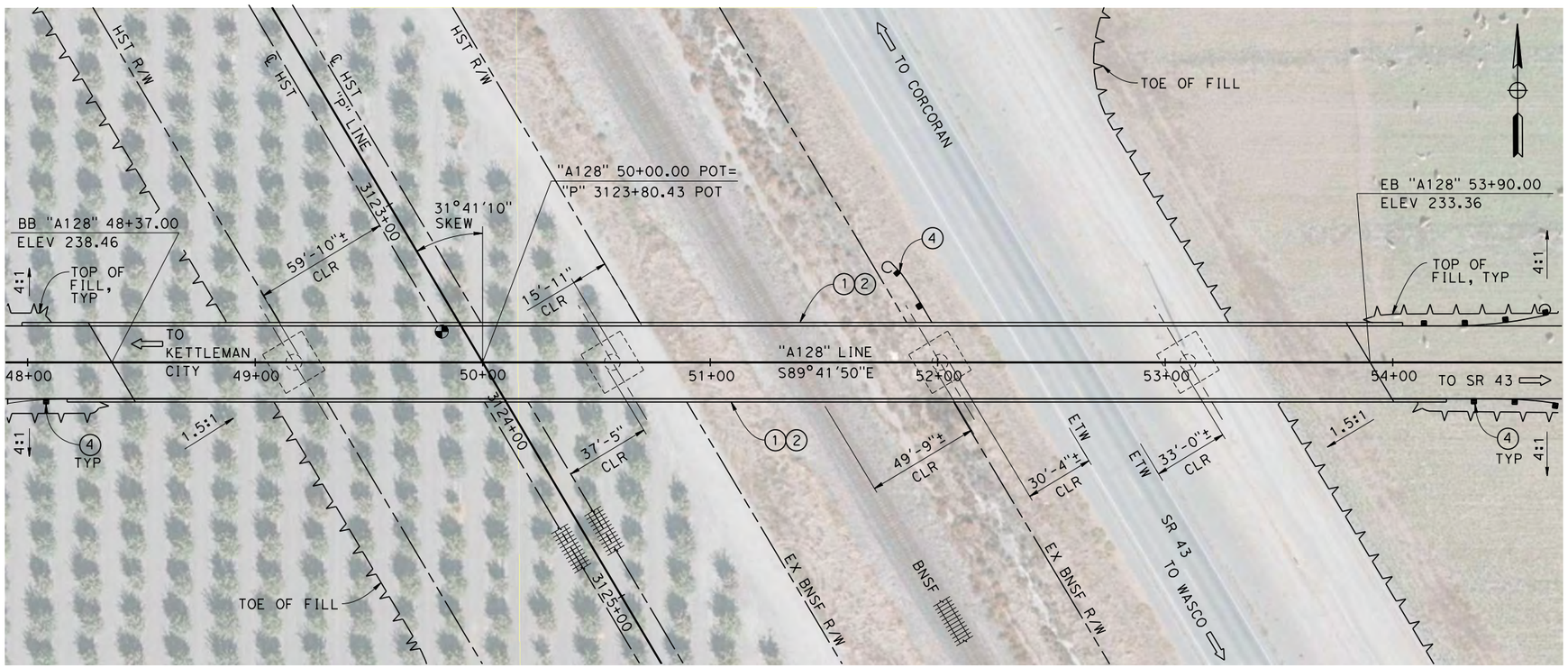

PLAN
SCALE:1"=30'

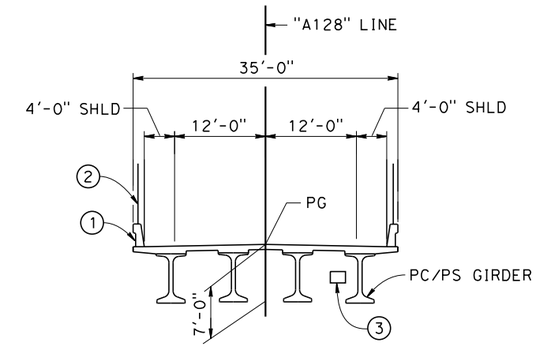

SECTION OVER BNSF

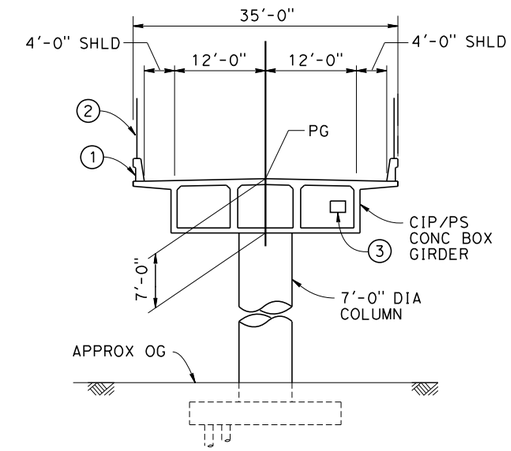

TYPICAL SECTIONS
SCALE:1"=10'

NOTES:
1. ALL PILES NOT SHOWN
2. FOR MINIMUM VERTICAL CLEARANCES, HORIZONTAL CURVE DATA, AND DETAILS NOT SHOWN, SEE ROADWAY PLANS.

LEGEND:
1. CONCRETE BARRIER WITH AR FENCE
2. AR FENCE WITH SOLID PLATE OVER HST
3. FUTURE UTILITY ENCASEMENT OPENING
4. MBGR

10 0 10 20 — SCALE: 1"=10'

30 0 30 60 — SCALE: 1"=30'

REV	DATE	BY	CHK	APP	DESCRIPTION

DESIGNED BY B. LUSCOMBE
DRAWN BY D. BARNHART
CHECKED BY E. MORAN
IN CHARGE R. COFFIN
DATE 12/31/13

RECORD SET 15% DESIGN SUBMISSION - NOT FOR CONSTRUCTION

URS | HMM | ARUP — CALIFORNIA HIGH-SPEED TRAIN

CALIFORNIA HIGH-SPEED RAIL AUTHORITY

CALIFORNIA HIGH-SPEED TRAIN PROJECT
FRESNO TO BAKERSFIELD
PIXLEY SUBSECTION
ALIGNMENT P
OVERHEAD PLANNING STUDY
AVE 128

CONTRACT NO. HSR 06-0003
DRAWING NO. ST2401
SCALE AS SHOWN
SHEET NO. 2 OF 5

BAR50597 12/20/2013 8:01:48 AM CAHSRP-r1.tbl CHSR_PDF_half_black.pltc:\pwworking\hmm\external\bar50597\dms95080\FB-ST-2401-P.dgn

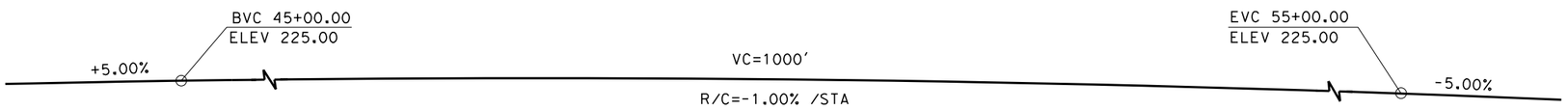

PROFILE GRADE
NO SCALE

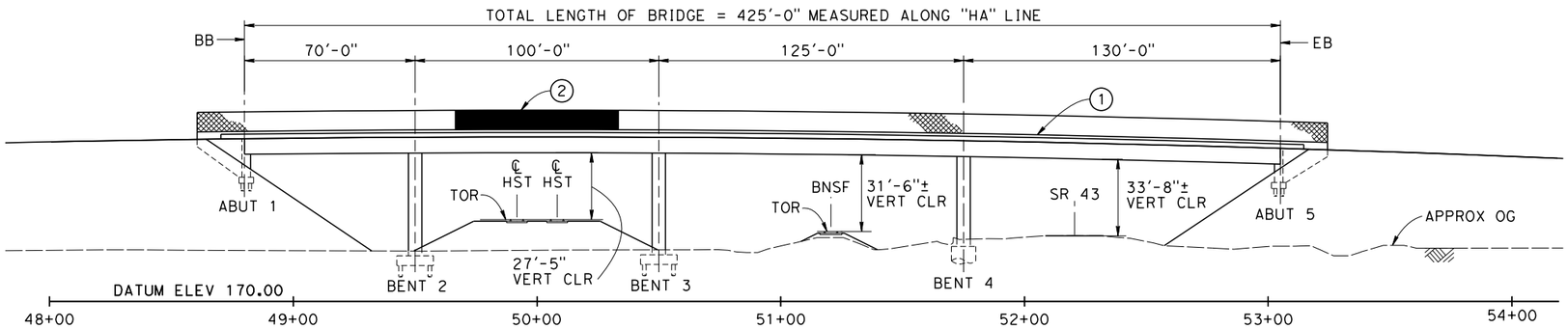

ELEVATION
SCALE:1"=30'

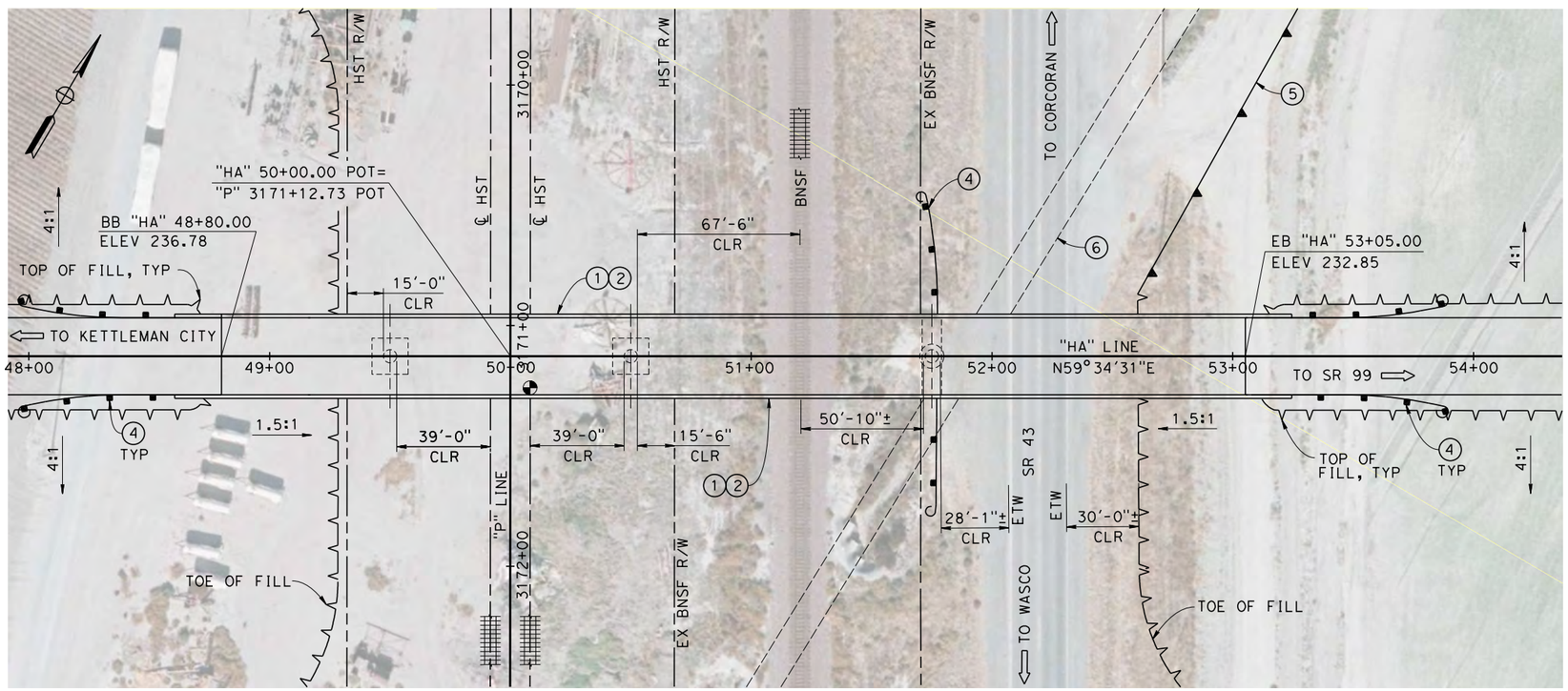

PLAN
SCALE:1"=30'

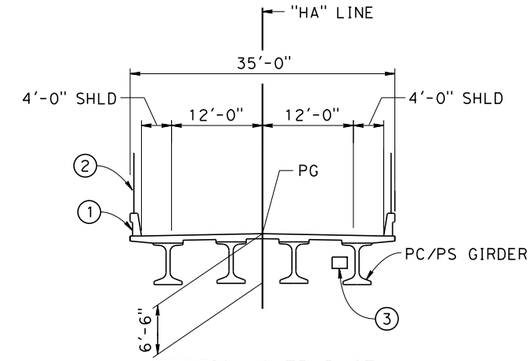

SECTION OVER BNSF

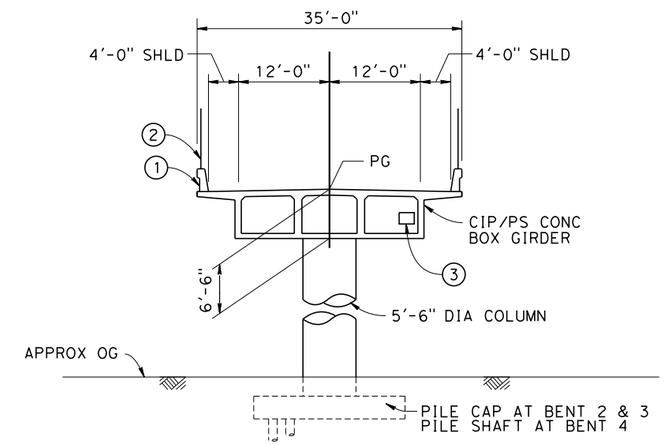

TYPICAL SECTIONS
SCALE:1"=10'

NOTES:

1. ALL PILES NOT SHOWN
2. FOR MINIMUM VERTICAL CLEARANCES, HORIZONTAL CURVE DATA, AND DETAILS NOT SHOWN, SEE ROADWAY PLANS.

LEGEND:

1. CONCRETE BARRIER WITH AR FENCE
2. AR FENCE WITH SOLID PLATE OVER HST
3. FUTURE UTILITY ENCASEMENT OPENING
4. MBGR
5. RETAINING WALL
6. EXISTING CULVERT

10 0 10 20 — SCALE: 1"=10'

30 0 30 60 — SCALE: 1"=30'

REV	DATE	BY	CHK	APP	DESCRIPTION

DESIGNED BY B. LUSCOMBE
DRAWN BY D. BARNHART
CHECKED BY E. MORAN
IN CHARGE R. COFFIN
DATE 12/31/13

RECORD SET 15% DESIGN SUBMISSION - NOT FOR CONSTRUCTION

URS | HMM | ARUP — CALIFORNIA HIGH-SPEED TRAIN

CALIFORNIA HIGH-SPEED RAIL AUTHORITY

CALIFORNIA HIGH-SPEED TRAIN PROJECT
FRESNO TO BAKERSFIELD
PIXLEY SUBSECTION
ALIGNMENT P
OVERHEAD PLANNING STUDY
HESSE AVE

CONTRACT NO. HSR 06-0003
DRAWING NO. ST2411
SCALE AS SHOWN
SHEET NO. 3 OF 5

BAR50597 12/23/2013 10:59:28 AM CAHSRP-r1.tbl CHSR_PDF_half_black.plt: \pwworking\hmm\external\bar50597\dms95080\FB-ST-2411-P.dgn

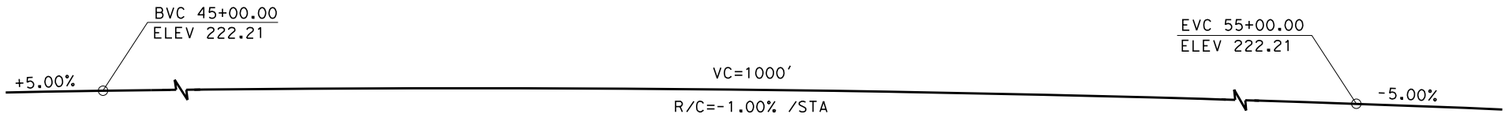

PROFILE GRADE
NO SCALE

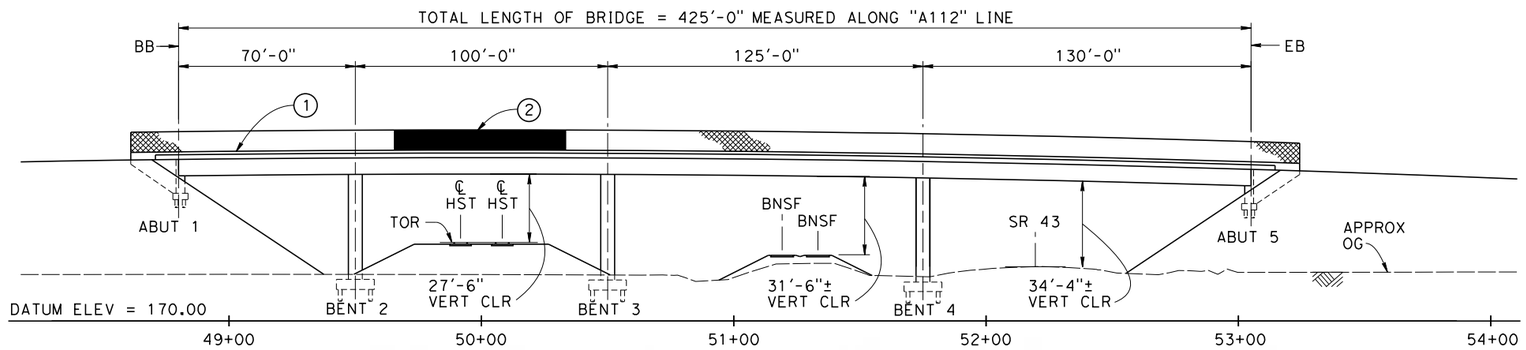

ELEVATION
SCALE:1"=30'

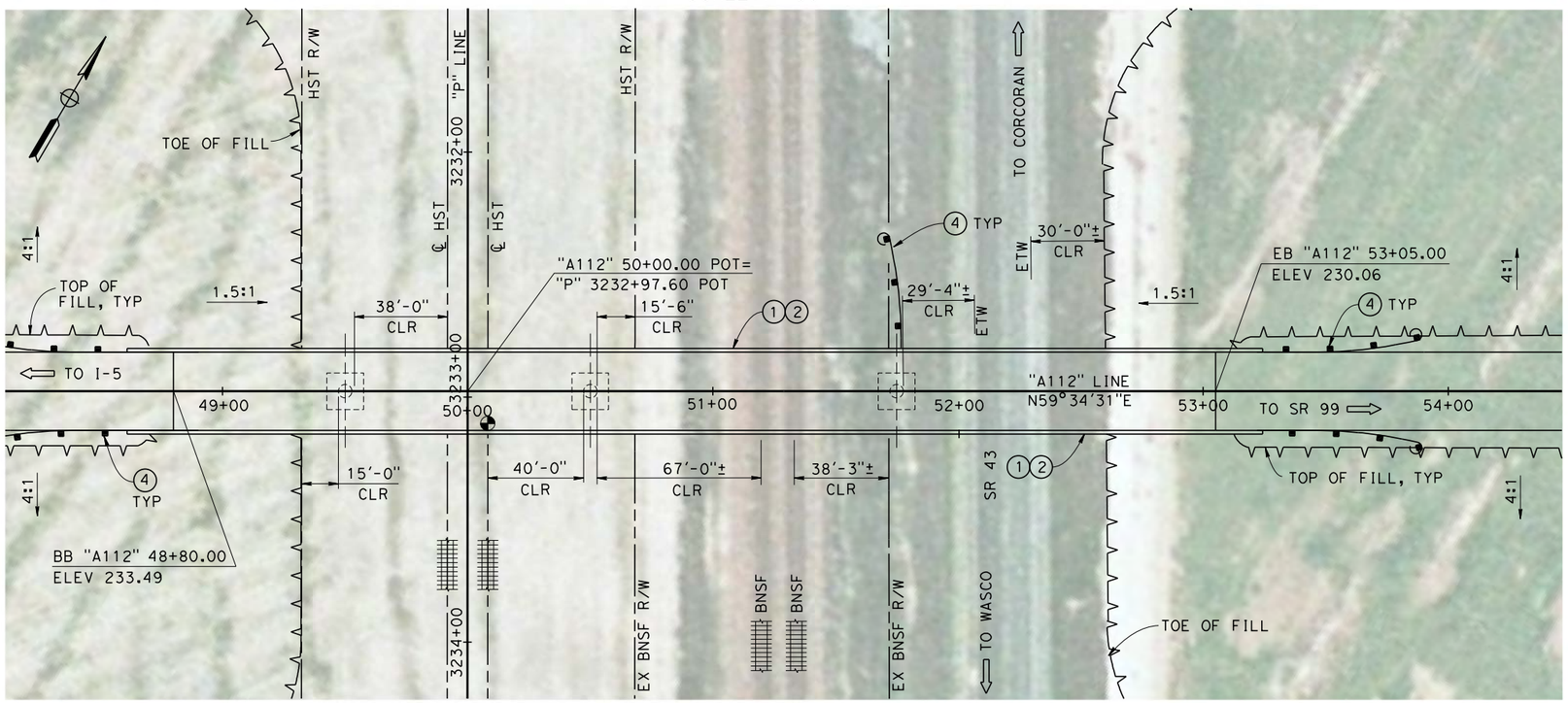

PLAN
SCALE:1"=30'

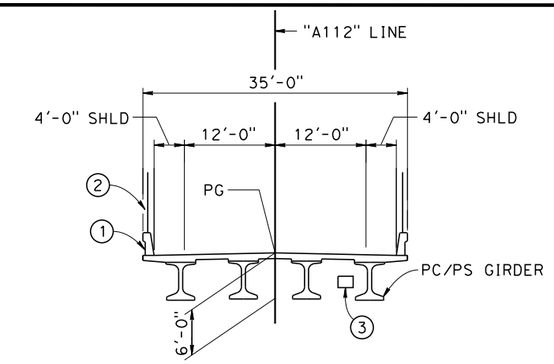

SECTION OVER BNSF

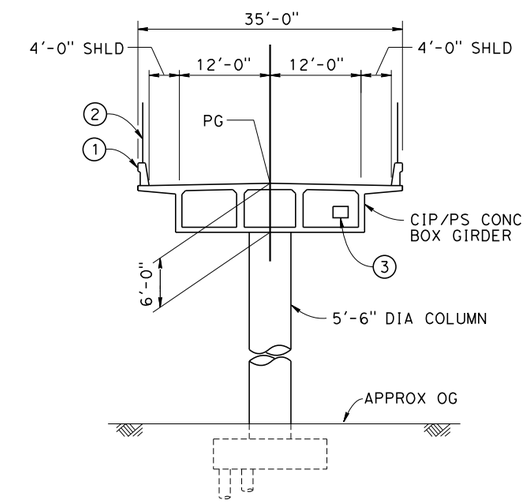

TYPICAL SECTIONS
SCALE:1"=10'

NOTES:

1. ALL PILES NOT SHOWN
2. FOR MINIMUM VERTICAL CLEARANCESS, HORIZONTAL CURVE DATA, AND DETAILS NOT SHOWN, SEE ROADWAY PLANS.

LEGEND:

1. CONCRETE BARRIER WITH AR FENCE
2. AR FENCE WITH SOLID PLATE OVER HST
3. FUTURE UTILITY ENCASEMENT OPENING
4. MBGR

10 0 10 20 — SCALE: 1"=10'

30 0 30 60 — SCALE: 1"=30'

REV	DATE	BY	CHK	APP	DESCRIPTION

DESIGNED BY B. LUSCOMBE
DRAWN BY D. BARNHART
CHECKED BY E. MORAN
IN CHARGE R. COFFIN
DATE 12/31/13

RECORD SET 15% DESIGN SUBMISSION - NOT FOR CONSTRUCTION

URS | HMM | ARUP
CALIFORNIA HIGH-SPEED TRAIN

CALIFORNIA HIGH-SPEED RAIL AUTHORITY

CALIFORNIA HIGH-SPEED TRAIN PROJECT
FRESNO TO BAKERSFIELD
PIXLEY SUBSECTION
ALIGNMENT P
OVERHEAD PLANNING STUDY
AVE 112

CONTRACT NO. HSR 06-0003
DRAWING NO. ST2421
SCALE AS SHOWN
SHEET NO. 4 OF 5

BAR50597 12/20/2013 8:04:15 AM CAHSRP-r1.tbl CHSR_PDF_half_black.pltc:\pworking\hmm\external\bar50597\dms95080\FB-ST-2421-P.dgn