PB96-118021

Safety of High Speed Ground Transportation Systems

U. S. Department of Transportation

Federal Railroad Administration

Office of Research and Development
Washington, D.C. 20590

Safety of Advanced Braking Concepts for High Speed Ground Transportation Systems

DOT/FRA/ORD-95/09
DOT-VNTSC-FRA-95-14

Final Report
September 1995

This document is available to the public through the National Technical Information Service, Springfield, VA 22161

REPRODUCED BY: NTIS

NOTICE

This document is disseminated under the sponsorship of the Department of Transportation in the interest of information exchange. The United States Government assumes no liability for its contents or use thereof.

NOTICE

The United States Government does not endorse products or manufacturers. Trade or manufacturers' names appear herein solely because they are considered essential to the objective of this report.

always expect a train

REPORT DOCUMENTATION PAGE

Form Approved
OMB No. 0704-0188

Public reporting burden for this collection of information is estimated to average 1 hour per response, including the time for reviewing instructions, searching existing data sources, gathering and maintaining the data needed, and completing and reviewing the collection of information. Send comments regarding this burden estimate or any other aspect of this collection of information, including suggestions for reducing this burden, to Washington Headquarters Services, Directorate for Information Operations and Reports, 1215 Jefferson Davis Highway, Suite 1204, Arlington, VA 22202-4302, and to the Office of Management and Budget, Paperwork Reduction Project (0704-0188), Washington, DC 20503.

PB96-118021

2. REPORT DATE
September 1995

3. REPORT TYPE AND DATES COVERED
Final - February 1995

4. TITLE AND SUBTITLE
Safety of High Speed Ground Transportation Systems: Safety of Advanced Braking Concepts for High Speed Ground Transportation Systems

5. FUNDING NUMBERS
RR593/R5019

6. AUTHOR(S)
David P. Wagner, Donald R. Ahlbeck, Jonathan F. Luedeke, Scott D. Cook, Mark A. Dielman*

7. PERFORMING ORGANIZATION NAME(S) AND ADDRESS(ES)
Battelle
505 King Avenue
Columbus, OH 43201

8. PERFORMING ORGANIZATION REPORT NUMBER
DOT-VNTSC-FRA-95-14

9. SPONSORING/MONITORING AGENCY NAME(S) AND ADDRESS(ES)
U.S. Department of Transportation
Federal Railroad Administration
Office of Research and Development
Washington, DC 20590

10. SPONSORING/MONITORING AGENCY REPORT NUMBER
DOT/FRA/ORD-95/09.1

11. SUPPLEMENTARY NOTES

12a. DISTRIBUTION/AVAILABILITY STATEMENT
This document is available to the public through the National Technical Information Service, Springfield, VA 22161

12b. DISTRIBUTION CODE

13. ABSTRACT (Maximum 200 words)

The objective of this study is to develop qualitative and quantitative information on the various braking strategies usee in high-speed ground transportation systems in support of the Federal Railroad Administration (FRA). The approach employed in this study is composed of two steps: first, build a technical understanding of the various braking strategies, and second, perform a safety analysis for each system. The systems considered in this study include seven operating high-speed rail transportation systems and three existing magnetic levitation systems. The principal technique used in the system safety analysis is Failure Modes and Effects Analysis (FMEA), an inductive approach to identifying system failure modes that depends on a thorough understanding of the system design and operation. Key elements derived from the system safety analysis are the fault-tolerant and fail-safe characteristics of the braking systems. The report concludes with recommended guidance on the structure of potential future regulations governing high-speed rail braking systems.

14. SUBJECT TERMS
high-speed, rail, magnetic leviation, braking equipment, fault-tolerant, fail-safe, FMEA, safety, failure modes

15. NUMBER OF PAGES
88

16. PRICE CODE

17. SECURITY CLASSIFICATION OF REPORT
Unclassified

18. SECURITY CLASSIFICATION OF THIS PAGE
Unclassified

19. SECURITY CLASSIFICATION OF ABSTRACT
Unclassified

20. LIMITATION OF ABSTRACT

PREFACE

The Intermodal Surface Transportation Efficiency Act of 1991 (ISTEA) generated renewed interest in establishing high-speed guided ground transportation (HSGGT) service in the U.S. These initiatives range from traditional rail service (though upgraded to accommodate higher speeds) to advanced technologies such as magnetically levitated (maglev) trains. As part of a comprehensive review of the safety and reliability of the proposed HSGGT systems, this current study of advanced braking systems examines the various strategies used to brake these high-speed vehicles safely, reliably, and efficiently.

The objective of this study is to develop information on various braking systems for HSGGT systems to assist the Federal Railroad Administration (FRA) in potential rulemaking activities related to high-speed brakes of HSGGT systems. The approach chosen for this activity was to examine existing HSGGT systems, first by building a technical understanding of the various braking strategies, and second, by performing a system safety analysis for each system. The HSGGT systems considered in this study include seven operating high speed rail transportation systems and three existing magnetic levitation systems. The seven high speed rail transportation systems included the Amtrak Metroliner (USA), X2000 (Sweden), ICE (Germany), TGV (France), IC 225 (Great Britain), Shinkansen 200 and 300 (Japan), and ETR450 (Italy). These seven systems represent the bulk of the high speed rail systems that are currently in service throughout the world. The three maglev systems included the Transrapid TR07 (Germany), HSST (Japan), and MLU002N (Japan). Currently, these maglev systems operate only as test vehicles, limited demonstration systems, and in some cases fair/exposition service.

The principal technique used in the system safety analysis is Failure Modes and Effects Analysis (FMEA), an inductive approach to identifying system failure modes that depends on a thorough understanding of the system design and operation. Key elements derived from the system safety analysis are the fault-tolerant and fail-safe characteristics of the braking systems. In general, fault tolerant and fail safe are defined as follows.

- Fault Tolerant - the built-in capability of a system to provide continued (full or limited) operation in the presence of a limited number of faults or failures.

- Fail Safe - a characteristic of a system or its elements whereby any failure or malfunction affecting safety will cause the system to revert to a state that is known to be safe.

This approach allowed design features that provide protection against failure to be readily identified. The analysis also examined specific failure modes for each system, including loss of power, loss of stored energy, and incapacitation of the train operator.

PROTECTED UNDER INTERNATIONAL COPYRIGHT
ALL RIGHTS RESERVED.
NATIONAL TECHNICAL INFORMATION SERVICE
U.S. DEPARTMENT OF COMMERCE

The results of the analyses show that many similarities exist among the high speed rail systems, although there are differences in design details and train control systems. The maglev systems also show several similarities; however, there is much more variety in their backup braking systems. These similarities, along with the fault tolerant and fail safe information from the system safety analyses, provide a basis for structuring guidance on future regulations governing HSGGT brake systems.

Current federal regulations for railroad braking systems are set forth in 49 CFR Part 232, *Railroad Power Brakes and Drawbars.* Although § 232.0 clearly includes HSGGT systems, 49 CFR 232 generally addresses only air brake systems on freight and passenger trains for standard gage railroads, which are relatively low-speed systems in current U.S. practice. In general, 49 CFR 232 is silent on braking systems other than these conventional air brake systems.*

The recommended requirements are based on the review of foreign experience in both high speed rail and maglev systems. The revisions, as much as possible, are written to be independent of the technology used to accomplish the braking task and do not distinguish between HSGGT technologies in describing requirements for the braking task. The recommendations focus on basic capability needs, fault tolerance, fail safety, inspection, test, and maintenance, and providing protection for failures that are not fault tolerant. As such, they represent a set of guidelines intended to assist FRA in ensuring safe stopping and speed control for future HSGGT systems, independent of the technology used to accomplish the braking mission.

This work was performed by a team comprising Battelle, TransTech Management, and Booz Allen & Hamilton for the Volpe National Transportation Systems Center (Volpe Center) under contract #DTRS-57-93-D-00027 Task No. VA 3207. This work is part of a broader program on HSGGT safety being conducted by the Volpe Center in support of the FRA Office of Research and Development.

*FRA has proposed revisions to 49 CFR Part 232 to address the needs of contemporary railroad operations and to facilitate the introduction of advanced technologies. The Notice of Proposed Rule Making (NPRM) was published in the Federal Register on September 16, 1994.

METRIC/ENGLISH CONVERSION FACTORS

ENGLISH TO METRIC

LENGTH (APPROXIMATE)

1 inch (in)	=	2.5 centimeters (cm)
1 foot (ft)	=	30 centimeters (cm)
1 yard (yd)	=	0.9 meter (m)
1 mile (mi)	=	1.6 kilometers (km)

AREA (APPROXIMATE)

1 square inch (sq in, in^2)	=	6.5 square centimeters (cm^2)
1 square foot (sq ft, ft^2)	=	0.09 square meter (m^2)
1 square yard (sq yd, yd^2)	=	0.8 square meter (m^2)
1 square mile (sq mi, mi^2)	=	2.6 square kilometers (km^2)
1 acre = 0.4 hectare (he)	=	4,000 square meters (m^2)

MASS - WEIGHT (APPROXIMATE)

1 ounce (oz)	=	28 grams (gm)
1 pound (lb)	=	0.45 kilogram (kg)
1 short ton = 2,000 pounds (lb)	=	0.9 tonne (t)

VOLUME (APPROXIMATE)

1 teaspoon (tsp)	=	5 milliliters (ml)
1 tablespoon (tbsp)	=	15 milliliters (ml)
1 fluid ounce (fl oz)	=	30 milliliters (ml)
1 cup (c)	=	0.24 liter (l)
1 pint (pt)	=	0.47 liter (l)
1 quart (qt)	=	0.96 liter (l)
1 gallon (gal)	=	3.8 liters (l)
1 cubic foot (cu ft, ft^3)	=	0.03 cubic meter (m^3)
1 cubic yard (cu yd, yd^3)	=	0.76 cubic meter (m^3)

TEMPERATURE (EXACT)

[(x-32)(5/9)] °F = y °C

METRIC TO ENGLISH

LENGTH (APPROXIMATE)

1 millimeter (mm)	=	0.04 inch (in)
1 centimeter (cm)	=	0.4 inch (in)
1 meter (m)	=	3.3 feet (ft)
1 meter (m)	=	1.1 yards (yd)
1 kilometer (k)	=	0.6 mile (mi)

AREA (APPROXIMATE)

1 square centimeter (cm^2)	=	0.16 square inch (sq in, in^2)
1 square meter (m^2)	=	1.2 square yards (sq yd, yd^2)
1 square kilometer (km^2)	=	0.4 square mile (sq mi, mi^2)
10,000 square meters (m^2)	=	1 hectare (he) = 2.5 acres

MASS - WEIGHT (APPROXIMATE)

1 gram (gm)	=	0.036 ounce (oz)
1 kilogram (kg)	=	2.2 pounds (lb)
1 tonne (t) = 1,000 kilograms (kg)	=	1.1 short tons

VOLUME (APPROXIMATE)

1 milliliter (ml)	=	0.03 fluid ounce (fl oz)
1 liter (l)	=	2.1 pints (pt)
1 liter (l)	=	1.06 quarts (qt)
1 liter (l)	=	0.26 gallon (gal)
1 cubic meter (m^3)	=	36 cubic feet (cu ft, ft^3)
1 cubic meter (m^3)	=	1.3 cubic yards (cu yd, yd^3)

TEMPERATURE (EXACT)

[(9/5) y + 32] °C = x °F

QUICK INCH - CENTIMETER LENGTH CONVERSION

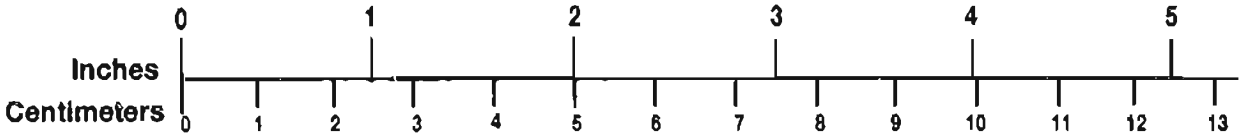

QUICK FAHRENHEIT - CELSIUS TEMPERATURE CONVERSION

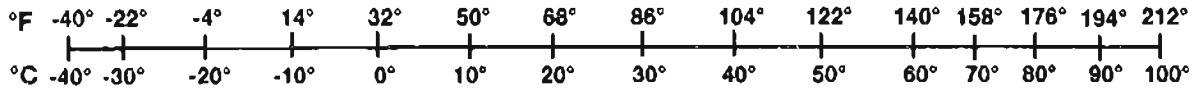

For more exact and or other conversion factors, see NBS Miscellaneous Publication 286, Units of Weights and Measures. Price $2.50 SD Catalog No. C13 10286

Updated 1/23/95

TABLE OF CONTENTS

Section **Page**

1. INTRODUCTION 1-1

1.1 Objective 1-1
1.2 Scope 1-1
1.3 Technical Approach 1-2
1.4 Organization of Report 1-4

2. GENERAL DESCRIPTION OF HIGH SPEED RAIL TRANSPORTATION SYSTEMS 2-1

2.1 Amtrak Metroliner—Northeast Corridor Service (USA) 2-1

2.1.1 Trainset Description 2-1
2.1.2 Brake System Description 2-2

2.2 X2000 Tilting Train (Sweden) 2-5

2.2.1 Trainset Description 2-5
2.2.2 Brake System Description 2-5

2.3 ICE—InterCity Express (Germany) 2-10

2.3.1 Trainset Description 2-10
2.3.2 Brake System Description 2-10

2.4 TGV Atlantique—Train a Grande Vitesse (France) 2-14

2.4.1 Trainset Description 2-14
2.4.2 Brake System Description 2-15

2.5 InterCity 225 (Great Britain) 2-17

2.5.1 Trainset Description 2-17
2.5.2 Brake System Description 2-17

2.6 Shinkansen (Japan) 2-19

2.6.1 Trainset Description 2-19
2.6.2 Brake System Description 2-19

TABLE OF CONTENTS (cont.)

Section **Page**

2.7 ETR450 (Italy) 2-22

2.7.1 Trainset Description 2-22
2.7.2 Brake System Description 2-23

2.8 Summary of High Speed Rail Brake Equipment 2-24

3. SYSTEM SAFETY ANALYSIS OF HIGH SPEED RAIL BRAKING SYSTEMS 3-1

3.1 Significance of Failure Modes 3-1

3.1.1 Working Definitions 3-1
3.1.2 Failure Mode Severity 3-2

3.2 Results 3-2
3.3 Braking System Response to Specific Failure Modes 3-5
3.4 Summary 3-8

4. GENERAL DESCRIPTION OF MAGNETIC LEVITATION (MAGLEV) TRANSPORTATION SYSTEMS 4-1

4.1 Transrapid TR07 (Germany) 4-1

4.1.1 Trainset Description 4-1
4.1.2 Brake System Description 4-2

4.2 HSST—High Speed Surface Transport (Japan) 4-4

4.2.1 Trainset Description 4-4
4.2.2 Brake System Description 4-5

4.3 MLU002N—Linear Motor Car Maglev (Japan) 4-7

4.3.1 Trainset Description 4-7
4.3.2 Brake System Description 4-8

4.4 Summary Comparison of Magnetic Levitation Braking Systems 4-11

5. SYSTEM SAFETY ANALYSIS OF MAGNETIC LEVITATION (MAGLEV) TRANSPORTATION SYSTEMS 5-1

TABLE OF CONTENTS (cont.)

Section **Page**

5.1 Significance of Failure Modes 5-1
5.2 Results 5-1
5.3 Braking System Response to Specific Failure Modes 5-3
5.4 Summary 5-6

6. RECOMMENDED SAFETY REQUIREMENTS 6-1

6.1 Existing Requirements (49 CFR 232) 6-1
6.2 Recommended Safety Requirements 6-2

APPENDIX A. REFERENCES A-1

APPENDIX B. BIBLIOGRAPHY B-1

LIST OF FIGURES

Figure **Page**

1-1 OVERALL APPROACH TO THE SYSTEM SAFETY ANALYSIS 1-3

2-1 TYPICAL U.S. PASSENGER TRAIN PNEUMATIC BRAKE SYSTEM (REF. 2) 2-4

2-2 SCHEMATIC DIAGRAM OF X2000 TRAIN PNEUMATIC BRAKE SYSTEM (REF. 3). 2-9

2-3 BRAKE CONTROL SCHEMATIC FOR ICE POWER CAR (REF. 5) 2-13

2-4 SCHEMATIC DIAGRAM OF SERIES 200 TRAINSET BRAKE SYSTEM (REF. 7) 2-21

LIST OF TABLES

Table		Page
2-1	BRAKE TYPES ON X2000 TRAINSET	2-6
2-2	BRAKING SYSTEM DESIGN OVERVIEW FOR SHINKANSEN TRAINSETS	2-20
2-3	SUMMARY OF HIGH SPEED RAIL BRAKING EQUIPMENT	2-25
2-4	BRAKE SYSTEM PERFORMANCE FACTORS	2-28
3-1	FAILURE MODE SEVERITY CATEGORIES	3-3
3-2	HIGH SPEED RAIL BRAKE SYSTEM RESPONSE TO SPECIFIC FAILURE MODES	3-6
4-1	BRAKING STRATEGY OF THE MLU002N	4-8
4-2	SUMMARY OF MAGNETIC LEVITATION TRAINSET BRAKING EQUIPMENT AND PERFORMANCE FACTORS	4-12
5-1	MAGNETIC LEVITATION BRAKE SYSTEM RESPONSE TO SPECIFIC FAILURE MODES	5-4
6-1	TABLE OF CONTENTS, 49 CFR PART 232 - RAILROAD POWER BRAKES AND DRAWBARS	6-2

1. INTRODUCTION

With the passage of the Intermodal Surface Transportation Efficiency Act of 1991 (ISTEA), there is renewed interest in establishing high-speed guided ground transportation (HSGGT) service in some of the major transportation corridors in the U.S. These initiatives have ranged from traditional (though upgraded) rail service to the advanced technologies such as magnetically levitated (maglev) trains. As part of a comprehensive review of the safety and reliability of the proposed HSGGT systems, this current study of advanced braking systems examines the various strategies used to brake these high-speed vehicles safely, reliably, and efficiently.

Conventional methods for braking rail passenger vehicles operating at speeds less than 200 km/h (125 mph) include friction brake systems, either wheel tread or disc brakes, and dynamic brake systems, both converting the train's kinetic energy into heat. In modern transit or intercity trains, these brake systems are "blended" to achieve the desired deceleration rates for ride comfort, efficient train handling, and safety under both service and emergency conditions. As operating speeds increase above 200 km/h (125 mph), the capacity of these conventional brake systems is taxed and other methods of slowing the train must be used, especially during emergency braking situations. With other technologies such as maglev, unconventional brake systems such as reversed thrust of a linear induction motor (LIM or LSM) or aerodynamic braking become the "norm" in lieu of friction braking.

1.1 OBJECTIVE

The objective of this study is to develop qualitative and quantitative information on various braking systems for HSGGT systems to assist the Federal Railroad Administration (FRA) in potential rulemaking activities related to high-speed braking of these HSGGT systems. Key elements of this information are the fault-tolerant and fail-safe characteristics of the braking systems as determined through system safety analysis.

1.2 SCOPE

The scope of this study includes seven operating high speed rail transportation systems and three existing magnetic levitation systems that currently operate only as test vehicles, limited demonstration systems and, in some cases, fair/exposition service. The system safety analysis of the braking systems focuses at a relatively high level for several reasons. First, this focus is sufficient to clarify the objectives and direction of safety requirements needed for potential rulemaking activities. Second, this focus satisfies the need to protect proprietary information describing braking system design and third, in some cases, limited information was available and more detailed analysis was not practical. The four U.S. Maglev System Concept Definitions (SCDs) are not included.

1.3 TECHNICAL APPROACH

The overall technical approach to the system safety analysis is shown in Figure 1-1. This approach is well-known and in the past has been applied to a variety of technologies where system safety analysis is important. The technique used in the system safety analysis was Failure Modes and Effects Analysis (FMEA), an inductive approach to identifying and assessing the effects of system failure modes that depends on a thorough understanding of the system design and operation. Design features that provide protection are also readily identified because the FMEA depends on an understanding of system operation. This method was chosen to support two goals of the analysis that rely heavily on understanding specific failure modes and their effects—assessing fault-tolerance and fail-safety of the advanced braking concepts.

The basic steps of the technical approach to the safety of HSGGT advance braking concepts are discussed below.

System Definition. The system definition is critical to the application of system safety techniques. The system definition defines the equipment in the system, the operational features and limits, and the boundary conditions of the system. For application to HSGGT advanced braking concepts, this also includes defining an overall braking strategy for each system since existing HSGGT systems rely on more than one braking concept to achieve an overall braking strategy. In general, these definitions (completed as Task 1 of this effort) include:

- the various braking concepts employed in the overall braking strategy,
- the preferred or primary, secondary, and emergency elements of the overall braking strategy,
- the methods employed to initiate and control braking, both for normal and emergency operation, and
- the level of automation designed into each braking strategy for each train set as well as the types of automatic override by a central train control system or, alternatively, manual override capabilities.

Identify Failure Modes. The system safety analysis used a modified FMEA format to report the results of the analysis. The modifications provide for reporting inherent protection provided by the system design and an indication of the fault-tolerance and fail-safety of each identified failure mode.

System Definition
overall braking strategy
system equipment and braking concepts
operational features and limits
⇓
Identify Failure Modes
logical operation of system braking strategy
normal service and emergency service
specific failure modes such as loss of power
⇓
Assess Failure Effects
immediate and expected outcome of the failure mode
response of on-board sensors and other equipment
⇓
Identify Inherent Protection
specific design features that mitigate or protect
fault-tolerance and fail-safety

FIGURE 1-1. OVERALL APPROACH TO THE SYSTEM SAFETY ANALYSIS

The procedure used for identifying failure modes generally followed the logical operation of the braking system strategy and concepts. Failure modes were postulated for each element of the braking system from initiation through application of the braking method. This deliberate, systematic approach to identifying failure modes helps reduce the possibility of omissions in the failure mode list.

In addition to the failure modes identified through the above procedure, each braking system was evaluated for the following specific failure modes.

- complete loss of power to the electrical portion of the braking system,
- loss of stored energy (e.g., air pressure) required to apply braking, and
- train operator incapacitated or oblivious.

Assess Failure Effects. The effects on the braking subsystem as well as the overall braking system were identified for each failure mode. The effects focus on the immediate and expected outcome of the postulated failure mode. Where appropriate, the response of on-board sensors or other equipment are noted in the effects description.

Identify Inherent Protection. An important part of this system safety assessment was to identify the features of the braking strategy that provide protection against the failure effects. These features generally define the fault-tolerant and fail-safe characteristics of the braking system. In general, fault tolerant and fail safe were defined as follows for the advanced braking systems safety analyses.*

- Fault Tolerant - the built-in capability of a system to provide continued (full or limited) operation in the presence of a limited number of faults or failures.

- Fail Safe - a characteristic of a system or its elements whereby any failure or malfunction affecting safety will cause the system to revert to a state that is known to be safe.

Thus, for each failure mode and effect, the specific design features that mitigate or protect against potential loss of braking capability are identified.

Recommended Safety Requirements. The final task of this project defines revisions recommended for consideration to 49 CFR 232, *Railroad Power Brakes and Drawbars*, to increase its suitability to HSGGT braking systems. This effort compared the HSGGT braking strategies with current requirements of 49 CFR 232 to identify potential gaps in the current regulations that may need to be addressed in the recommended safety requirements. The recommended revisions considered the fault-tolerance and fail-safety aspects of the HSGGT braking strategies, inspection and monitoring of system elements that are not fail-safe or fault-tolerant, and combinations of braking concepts as they may be applied to HSGGT systems.

1.4 ORGANIZATION OF REPORT

Section 2 provides a general description of the High Speed Rail (HSR) transportation systems considered in the study to provide some background on current operational modes and the braking system design for each of the systems. Section 3 focuses discussion on the system safety analyses for the HSR braking system designs. Section 4 provides a general description of the magnetic levitation (maglev) transportation systems considered in the study, including background information on conceptual operational modes and the braking system design for each of the systems. Section 5 focuses discussion on the system safety analyses for the maglev braking system designs. Section 6 presents recommended safety requirements compared with existing regulations.

A separate report provides additional detail of the braking systems design and operations as well as FMEA tables for each braking system. Because these detailed descriptions and results contain some proprietary information on the braking systems, this report is published separately with limited distribution.

---

*Additional descriptive information about these definitions as they are applied in the safety analyses is provided in Section 3.

2. GENERAL DESCRIPTION OF HIGH SPEED RAIL TRANSPORTATION SYSTEMS

Seven high speed rail transportation systems were considered in this study. These systems include:

- Amtrak Metroliner—Northeast Corridor Service (USA)
- X2000 Tilting Train (Sweden)
- ICE—InterCity Express (Germany)
- TGV Atlantique—Train a Grande Vitesse (France)
- InterCity 225 (Great Britain)
- Shinkansen 200 and 300 (Japan)
- ETR450 (Italy)

These seven systems represent the bulk of the high speed rail trainsets that are currently in service throughout the world. Each of these systems, and specifically the braking systems, are described in the following sections.*

2.1 AMTRAK METROLINER—NORTHEAST CORRIDOR SERVICE (USA)

2.1.1 Trainset Description

The Amtrak Metroliner service on the Northeast Corridor between New York City and Washington, D.C. represents the state-of-the-art in U.S. high-speed rail service. On portions of this route, the Metroliner trains achieve speeds of 201 km/h (125 mph) on a concrete-tie track structure with continuous welded rail (CWR) and direct fixation fasteners. These trains consist in general of an AEM-7 electric locomotive and six Amcoach passenger cars. Express Metroliners with one intermediate stop complete the 362 km (224-mile) trip from Washington to New York in 2 hours 30 minutes. Longer trains are also run with tandem AEM-7s, achieving the 201 km/h maximum speed, but with longer overall schedule times.

The AEM-7 locomotive is based on the standard ASEA Rc-4 locomotive used by the Swedish Railways (SJ). Built by Electro-Motive Division (EMD/GM) with electrical equipment by ASEA (now ABB), the 52 locomotives have been in service since 1980. These 4-axle units, rated at up to 5400 hp (7600 hp short term), have solid-state rectifiers and thyristor control of individual wheelset traction motors to control adhesion and wheel slip. The units run off an 11,000 volt, 25 Hz AC overhead catenary power source.

The original Amfleet coaches were some of the last constructed by the Budd Company and use the standard Pioneer III truck design. Introduced during the late 1970s as the self-

*The order of presentation is arbitrary and is not intended to infer a priority order for the various trainsets.

The original Amfleet coaches were some of the last constructed by the Budd Company and use the standard Pioneer III truck design. Introduced during the late 1970s as the self-powered Budd Metroliner cars were phased out, the design incorporates many of the features of the these older self-powered units. A second procurement, the Amfleet II car, was constructed during 1982. The full trainset (one locomotive and six passenger cars) weighs approximately 366 metric tons (404 tons).

2.1.2 Brake System Description

The braking system of Amtrak's Metroliner trains represents a proven, standard design for an electric locomotive and locomotive-pulled passenger cars operating in a manual block signal system with in-cab signal indications. The braking system on the AEM-7 locomotive consists of dynamic (resistive) brakes, and pneumatically-powered tread and disc brakes (Ref. 1). The coaches are braked by pneumatically-powered axle-mounted disc brakes.

Dynamic/Resistive Brake. The AEM-7 locomotive uses resistive dynamic braking, where kinetic energy is converted back to electrical energy by the traction motors, then dissipated to the atmosphere as heat through a bank of resistors mounted on the car body roof. Cooling is provided simply by air flow across the resistor bank from forward motion. Dynamic braking capacity is a function of train speed ranging from 30 to 39 percent of the available limit at 200 km/h (125 mph), and from 52 to 68 percent of the available limit at 130 km/h (80 mph) for typical braking adhesion limits. A limit of 970 amps is imposed so that the traction motors are not damaged. Below 60 km/h (37 mph), dynamic braking capacity decreases sharply as motor armature speed decreases.

Friction Brakes. A single stage, positive displacement rotary (screw-type) air compressor supplies the automatic air brake system of the train. This unit is driven by a 440-volt three-phase electric motor. Output air is filtered and dried, then supplied to the main reservoir.

The AEM-7 locomotive and passenger cars are equipped with conventional automatic air brakes. This provides fail-safe braking and high levels of retardation. On the locomotive, the disc brake units are located on the outboard end of each truck and consist of two discs bolted to one another through the wheel plate. A pair of calipers with brake pads clamp around the wheel rim onto the two discs to provide braking. The discs contribute between 60 to 80 percent of locomotive friction braking.

The Amcoach cars have two ventilated brake discs per axle with standard brake calipers and composition pads. In addition, two wheel tread brakes are used to provide a portion of the friction braking and to "condition" the wheel treads (to reduce surface contaminants, improving adhesion).

On the locomotive, single shoe tread brakes are located at the inboard side of each wheel. These units use cast iron brake shoes to provide the remaining 20 to 40 percent of the friction braking effort and also clean and condition the wheel treads for improved adhesion.

Braking Control Components. The automatic air brake system on the Metroliner trains consists of a number of subsystems on the locomotive and cars that are optimized to produce smooth and repetitive stops. This is accomplished with the standard Type 26 two-pipe brake system. An outline drawing of a typical Type 26 pneumatic system is shown in Figure 2-1 on the next page.

The principal control mechanisms for the braking system are:

- the automatic brake valve, which controls both the dynamic and air brakes in blended braking,
- the dynamic brake control on the locomotive throttle,
- the independent brake valve that controls the locomotive brakes only, and
- the emergency brake valve.

Brake controls in the cab of an AEM-7 locomotive consist of the following components: 1) the automatic brake valve, which commands braking of both locomotive and train brakes through reduction in the train brake pipe pressure, 2) the independent brake valve, which controls only the locomotive brakes, 3) an automatic brake valve cutout valve, 4) an independent and automatic brake cutout cock, and 5) an emergency brake valve. The Type 26 brake control valve is "pressure maintaining" and will hold the desired brake pipe pressure reduction steady against normal system leakages. The independent brake valve is self-lapping and will hold the locomotive brakes in the applied setting.

In addition to the pneumatic brake controls, the locomotive has a dynamic brake control. The dynamic brake is controlled directly by the throttle: forward through ten positions applies traction power, and pulling the throttle toward you past the zero position applies dynamic braking. The dynamic braking is also controlled by the automatic brake valve and is blended with the pneumatic braking, using the dynamic braking to maximum strength, supplemented by friction braking as required. Applying the automatic air brakes disengages throttle power if it is in one of the power positions.

The standard Type 26 brake system on the passenger cars consists of a main reservoir pipe supplying air to the main pneumatic control unit panel and air supply reservoirs, and a brake pipe providing the basic braking control signal (pressure modulation for brake application or release). A reduction relay valve at the opposite end of the car speeds the brake application action. Three emergency brake valves and associated brake application valves are located on the car for train crew or passenger use in emergencies.

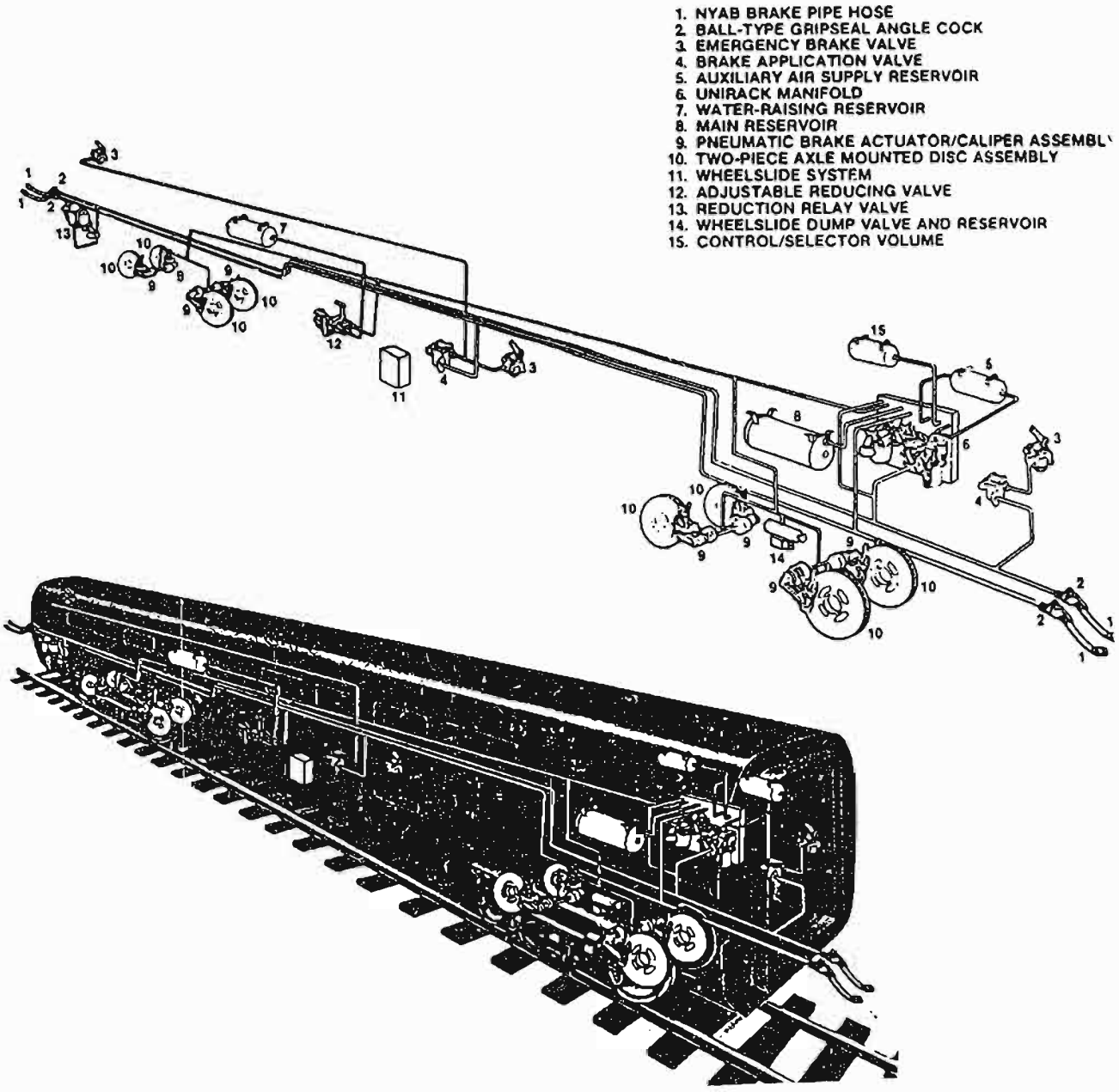

FIGURE 2-1. TYPICAL U.S. PASSENGER TRAIN PNEUMATIC BRAKE SYSTEM [REF. 2]

Wheelslip Protection. Pressure to the brake cylinders is modulated by the wheelslip dump valve to avoid loss of adhesion. A wheelslip protection system, a WABCO E-5 Decelostat unit, is used to control these valves. A 100 pulse-per-revolution angular velocity signal from each axle (a gear tooth and magnetic pickup) is analyzed by logic circuits to detect wheel slip. This circuit compares the tachometer signals from the four axles and detects a speed differential (> 2 mph) of the slipping wheelset, reducing brake cylinder pressure at that truck. It also compares the difference in rate of change of rotation speed as the car decelerates in braking.

2.2 X2000 TILTING TRAIN (SWEDEN)

2.2.1 Trainset Description

The X2000 tilting-body train has been under development in Sweden for over ten years, in cooperation with the Swedish National Railways (SJ). Revenue service operations with the train began on SJ's Stockholm to Göthenburg line in September 1990. A limited number of trainsets are currently in revenue service on three other SJ lines. The trainset order was scheduled for completion in 1994. Two additional proposed X2000 services include Oslo to Bergen in Norway, and Helsinki to Tampere in Finland. In order to increase train speeds on existing corridors and reduce travel times without compromising ride quality, ABB has incorporated advanced (but proven) features in the trainset design:

- An active tilting-body system on the trailer cars (coaches) to improve passenger comfort in curves,
- Self-steering (radial axle) bogies to reduce wheel/rail forces and wear in curves,
- Asynchronous AC traction motors on the electric locomotive to reduce weight and increase reliability in traction power,
- Semi-permanent drawbar connections between all cars and locomotive (similar to transit practice), and
- Integrated digital electronic controls for power, braking, communications, system diagnostics, and "hotel" functions.

The X2000 trainset currently in service consists of a locomotive (power car), four trailer cars, and a driving trailer car (cab control car). Weights are as follows:

- Power car - 70 metric tons
- Trailer car - 54.5 metric tons
- Cab control car - 55 metric tons (5 to 6 metric tons additional ballast in winter).

Overall, the nominal train weight is 343 metric tons with a length of 340 m (459 ft). The train is designed for a maximum speed of 210 km/h (130 mph), with a revenue service speed of 200 km/h (124 mph). With a power car at each end, a maximum of 12 trailer cars may be accommodated in one train.

2.2.2 Brake System Description

The X2000 braking systems described below refer to the trainset that operated on the NEC during the summer of 1993 in tests and revenue service. Each major subsystem can be used separately or in combination for speed retardation at those levels prescribed by route-specific

requirements. Brake systems are configured differently on the power car, cab control car, and trailer cars as shown in Table 2-1.

TABLE 2-1. BRAKE TYPES ON X2000 TRAINSET

Brake Type	Power Car	Cab Control Car	Trailer Car
Dynamic/Regenerative Brake	√	√	
Air Activated Disc Brake	√	√	√
Air Activated Tread Brake	√	√	
Parking Brake	√	√	
Magnetic (Emergency) Track Brake		√	√

Dynamic/Regenerative Brake. Dynamic/regenerative braking uses the AC traction motor and propulsion system to generate a retarding force on the trainset during braking. When operable, this system can be employed across a broad spectrum of the train's speed range. The regenerative brake on-board the trainset can be used in one of two modes. It can be used as a stand-alone system to control speed or it can be used in conjunction with the friction braking system. In the blended braking mode, additional retarding force is achieved to reduce speed more rapidly.

Friction Brakes. All cars (power and trailing cars) are equipped with conventional automatic air brakes. This provides fail-safe braking and high levels of retardation. Compressed air is supplied from a Knorr Model SL-20 screw-type air compressor in the power car through the main reservoir and brake pipes to individual vehicle brake systems. The power car has wheel mounted split friction rings on all wheels serving as disc brakes. All trailing cars are equipped with two axle-mounted discs per axle. These are a ventilated fin design that provide cooling, but reduce the power loss at high speeds compared to the conventional vane design. Each car (including the power car) is equipped with eight SAB Type PB actuators with integral double-acting slack adjusters, and associated caliper foundation rigging.

The power car is also equipped with tread brakes with cast iron brake shoes. These serve primarily as a wheel scrubber to increase adhesion levels and improve tractive effort and braking force. It is an SAB-type BFC brake actuator integrated with single action slack adjusters configured with one unit per wheel. The tread brake units provide approximately 20 percent of the friction braking force for the locomotive when working together with the rest of the friction braking system.

Magnetic Track Brakes. All trailer cars are equipped with four articulated magnetic track brakes that are applied directly to the rail independent of wheel/rail adhesion characteristics in effect. These are designed with a sealed winding located within each steel frame, where ten floating and two fixed-position cast iron shoes are bolted to the frame. The fixed shoes are located at each end of the frame and are tapered to clean away foreign objects on the rail.

Each of ten interior shoes is bolted through vertical slots in the steel frame to allow for some vertical movement to compensate for changes in rail running-surface geometry. The track brake is carried approximately 50 mm (2 inches) above the rail when inactive. Track brakes are actuated by pairs of air cylinders, overcoming return-spring forces, and are electrically energized to generate a minimum 100 kN (22.5 kip) downward force on the rail. Power is supplied for these brakes by the 24 VDC batteries on board the train. At a speed of 194 km/h (120 mph), the magnetic track brakes alone are estimated to produce an average braking rate of 1.53 km/h/sec (0.95 mph/s).

Eddy Current Brakes. The European version of the X2000 can be equipped with an eddy current brake. This brake is conceptually identical to the stock brakes supplied on the ICE trainset in Germany for use on Deutsche Bundesbahn (DB). Eddy current brakes operate by dispersing kinetic energy of the train via a powerful electrical current through the rail head. Electrical fields are introduced upon the rail to resist the trains free rolling movement longitudinally. These are non-contact brakes which reduce maintenance requirements by avoiding any contact force. Eddy current brakes can, however, cause potential rail heating problems if they are used too frequently over a given track segment.

At decelerations of up to 0.5m/second squared (maximum service braking with automatic train control), the train can be brought to extremely slow speeds without any mechanical contact.* In low speed ranges, disc brakes are then applied to bring the train to a complete stop.

Braking Control Components. The principal control mechanisms for the braking system are:

- the brake controller, which controls both the dynamic and air brakes in blended braking
- the dynamic brake control on the speed controller lever (throttle)
- the driver's brake control valve that controls the air brakes
- the emergency brake valve, which applies emergency braking including the magnetic track brakes, and
- two conductor's valves which directly initiate emergency braking.

The train driver (engineer, operator) can set the amount of regenerative braking desired through the speed controller lever (throttle) to make minor speed adjustments. The driver can also use the brake controller, which will apply the automatic train brake through the driver's

*Brake System Overview for the USA High Speed Demo trains (X2000 and ICE), B.M. McGlaughlin, New York Air Brake, Air Brake Association Annual Conference, Chicago, IL, September 12-15, 1993.

brake valve (HSM*). This action activates regenerative braking and applies air pressure to the trailing car disc brakes. When the dynamic brake limit is reached, air pressure is applied to the power car disc and tread brakes. The ratio of regenerative to friction braking is controlled by pre-programmed blended braking regimes actuated by the central computer according to a speed profile.

The automatic air brake system actually consists of a number of subsystems optimized to work together. An overview of the pneumatic system is shown in Figure 2-2 on the next page.

Driver's Brake Control Valve (HSM). The driver's brake control valve (on power and cab control cars) regulates the brake pipe pressure for application and release of disc and tread brakes. The system consists of 1) an electronic brake controller (in both cabs), 2) an HSM brake computer (power car only), and 3) an electropneumatic unit (power car only). The controller is activated at one or the other location by a cab switch key, and communicates by current-based signal with the central computer (one at each end of the train set), which in turn controls the HSM computer. The controller has a running position, seven detented service braking positions (Position 1 is a 0.4 bar, 6 psig, service reduction; Position 7 is "full service" braking reduction), and an emergency (NB) position. In the emergency position, the controller signals the HSM computer to initiate an emergency brake pipe reduction. A special set of electrical contacts de-energize an externally mounted emergency magnet valve, which pilots the emergency brake valve, which in turn vents the brake pipe quickly. This also, through the isolating valve on the pneumatic brake rack, shuts down the brake pipe relay valve cutting out the brake pipe pressure maintaining function.

The HSM computer, mounted on the electropneumatic unit, drives two analog converters in response to the driver's commands for braking. One converter controls a pilot pressure to change the brake pipe pressure, while the second modulates the control line pressure (Cv) for power car friction brake gear. Located in the power car machine room, the electropneumatic unit incorporates the following equipment: 1) the analog converters, 2) the reducing valve (limiting the pressure in the pre-control reservoir of air from the main reservoir), 3) the RH2 relay valve (which incorporates the pressure maintaining feature), 4) the isolating valve (cutting out the pressure maintaining feature in emergencies), and 5) a flow indicator (monitoring main reservoir air flow to the brake pipe). Two 50 liter air reservoirs, charged by the main reservoir pipe, supply air pressure for each of two DU 111G relay valves and the brake cylinders.

The Electrically Controlled Emergency Valve (ECEV), located in the power and cab cars, consists of a normally energized magnet valve, a cutout cock, and a pneumatically piloted emergency brake valve. It vents the brake pipe pressure quickly when the magnet valve is de-energized by signals from 1) the HSM driver's brake valve, 2) the alerter system (Vigilance Control), or 3) the separate emergency brake valve in the cab. The magnetic track brakes are also activated when emergency braking is initiated.

---

*"HSM" is the German acronym for this valve.

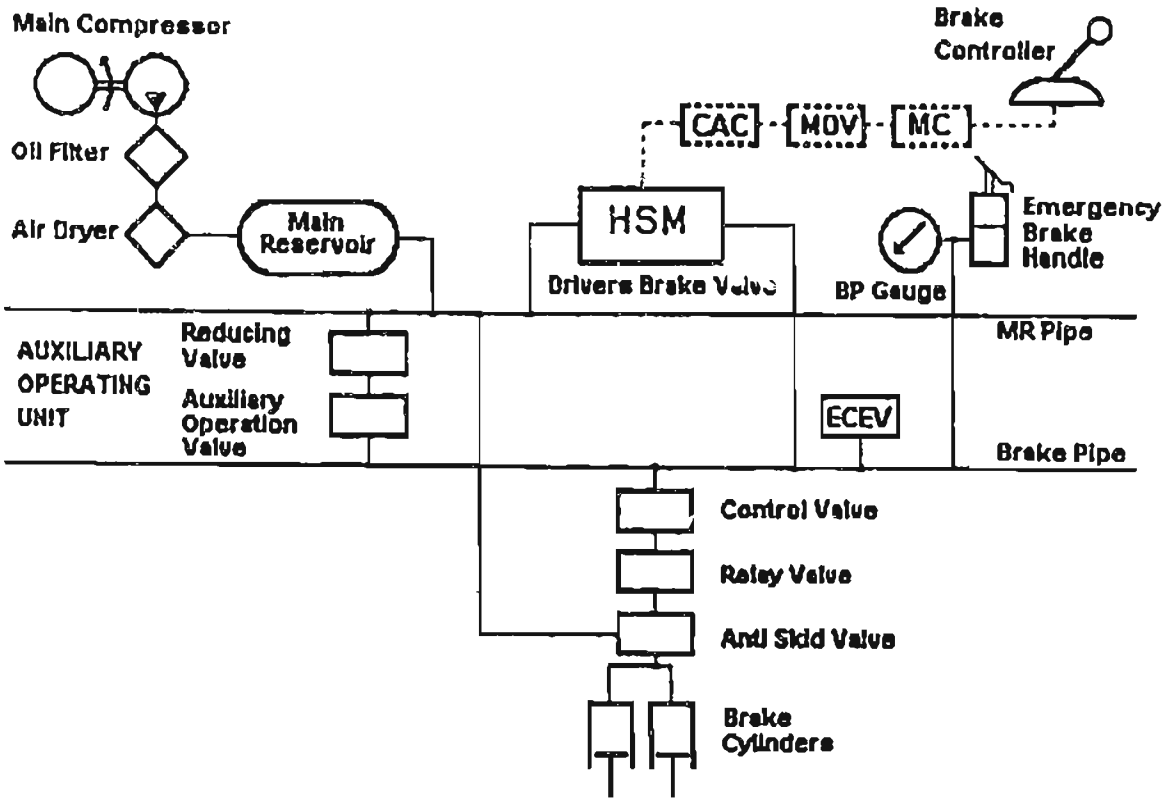

FIGURE 2-2. SCHEMATIC DIAGRAM OF X2000 TRAIN PNEUMATIC BRAKE SYSTEM [REF. 3]

All trailer cars are equipped with two "conductor's valves" which vent the train brake pipe directly to atmosphere. Activation of these valves will also signal the central computer, which will then initiate the emergency braking sequence.

All cars are equipped with the Knorr Type KE control valve to provide quick response to changes in brake pipe pressure or commands from the HSM brake computer to charge, apply brakes, or release brakes on the car. This valve consists of a basic service portion, an EP brake solenoid portion, and a small (4 liter) reservoir, which serves as a reference volume for the service portion. The EP brake portion, controlled by the HSM computer, consists of a brake application magnet valve and a brake release magnet valve, charging or venting the brake pipe locally for quick response. Each control valve may be isolated from the brake pipe by a cutoff cock. Each car has a 50 liter air reservoir tank charged by the main reservoir pipe. These supply air pressure to the pre-control (Cv) pipe and the brake cylinders during brake application.

All cars are equipped with two relay valves ("step down," or pressure reducing), one per truck, which are piloted by the control valve and supply main reservoir air to the brake cylinders during brake application. The relay valves vent air pressure from the brake cylinders during brake release.

Wheelslip Protection. The anti-skid system is designed to prevent wheel sliding during braking, which can cause wheel flats and tread thermal damage, and to maximize wheel adhesion. The system consists of a speed sensor on each axle which detects wheel slip. This signal is computer-processed to modulate brake cylinder pressure through the anti-skid valve on the affected truck. Pressure is momentarily reduced enough to restore full wheelset adhesion. The anti-skid function times out after eight seconds to prevent total loss of braking on that truck. Wheel skid is controlled by slave computers in each trailer car (which also control the tilt system and the doors).

2.3 ICE—INTERCITY EXPRESS (GERMANY)

2.3.1 Trainset Description

The German InterCity Express (ICE) has been in joint development for over a decade by the railway industry and the German Federal Railways (Deutches Bundesbahnen). The ICE train is now in service at track speed limits of up to 280 km/h between Hanover and Würzburg allowing start-to-stop schedules between certain cities of 180 km/h or higher. This has been made possible by construction of new high-speed lines (Neubaustrecke, NBS) and upgraded automatic train control equipment on some existing lines. The ICE train consists of two power cars and up to 12 (14 maximum) trailer cars in the standard two-bogie, four-axle configuration for all cars. Weights are as follows:

- Power car - 78 metric tons (86 tons)
- Trailer car - 52 metric tons (57.3 tons)
- Service car - 52.6 metric tons (58 tons)
- Restaurant car - 55.5 metric tons (61.2 tons)

The total train weight is 784 metric tons, (2 power, 1 service, 1 restaurant, and 10 trailer cars) at a length of 357 meters (1171 ft). Current service speed is listed at 250 km/h (155 mph) with a maximum speed limit of 280 km/h (174 mph).

A modified ICE train was tested and demonstrated on Amtrak's NEC trackage during the summer of 1993, reaching speeds of 261 km/h (162 mph) during these tests. Revenue service demonstrations were run as a Washington to New York Metroliner train.

2.3.2 Brake System Description

The ICE trainset brake system uses (in order of preference) three types of braking: 1) dynamic/regenerative braking, 2) pneumatic/electropneumatic friction braking, and 3)

magnetic track brakes for emergency braking.* Control is based on the pneumatic brake pipe complying with UIC standards.

Dynamic/Regenerative Brake. Electrodynamic (regenerative) braking is available on the axles of the power cars, using the AC traction motors as generators to return power to the catenary. Up to 3,300 kilowatts of power can be generated per power car. If the catenary (power system) rejects the load, however, dynamic braking capacity is lost. Microprocessor control of braking uses the dynamic braking preferentially to maximize energy regeneration and gain efficiency in operations.

Friction Brake. All cars (power and trailing) are equipped with a conventional automatic electropneumatic brake system. This pneumatic system is designed to provide alone, sufficient braking power to meet both service and emergency braking requirements in case other elements of the brake system fail. Each power car axle is equipped with two non-ventilated discs (cast steel alloy, sintered metal pads) with force generated by a double caliper brake cylinder unit for the two discs. Trailer cars are equipped with four ventilated discs (cast iron with organic composition pads) on each axle with force generated by a single caliper and brake cylinder per disc. In addition to high temperature stability, these disc brakes offer less sensitivity to moisture and more uniform friction coefficients at high speeds.

Magnetic Track Brake. Electromagnetic track brakes are used on the trailer car bogies for emergency braking situations. This type of brake has been used by DB for more than 20 years but, because of substantial wear, it is used only in emergency braking.

Braking Control Components. The principal control mechanisms for the braking system are:

- the driver's brake control valve, which controls the dynamic and air brakes in blended braking,
- the independent pneumatic control on the drivers brake valve, and
- the emergency brake unit which initiates emergency braking including the magnetic track brakes.

The ICE braking system is designed primarily for computer-controlled automatic speed control operations in which the on-board system is integrated with track circuits controlled from a central dispatching computer. Manual operation can override the automatic train control, but operation is still enhanced by the on-board computers and microprocessors through controlled deceleration, priority distribution of braking, and fault monitoring and diagnostics.

---

*There is the option of using eddy-current track brakes instead of magnetic track brakes for both emergency and service braking. These are used in Germany on the ICE-V trainset, but were not included on the demonstration ICE trainset.

Driver's Brake Control Valve (HSM). The driver's brake control valve Type HSM-PEP, located in the power unit cab, controls the automatic air brake system (with additional electropneumatic EP-assist units) by indirect (or direct) regulation of the brake pipe pressure. The valve is used to set the desired train braking level, either manually by the operator or by the automatic train control (ATC) system. Manual operation has priority over the ATC operation. Set values are monitored by microprocessor brake control units in power and trailer cars, which control the dynamic and/or friction brake systems. In addition to the electronic control, the driver's brake valve contains an independent pneumatic control. Changeover can be effected manually by the operator or automatically through fault diagnosis by the computer.

Brake Electronics Unit. The brake electronics unit, installed in the power car, connects with the control desk, the fiber optic train data bus, the central vehicle diagnostic computer ("DAVID"), and with the drive control/regenerative brake through the train control unit (ZSG), as shown in Figure 2-3 on the next page. The unit also communicates through a second RS 323 bus with microprocessor-based anti-skid units (MGS), sharing speed and diagnostic information.

The driver's brake control unit (HSM-MGS) combines brake control electronics, comprehensive diagnostics of the automatic air brake system, and anti-skid (wheel slip) protection for the power car, both in braking and traction modes. The unit controls brake pipe pressure (through EP assist) to set or release brakes, distributes brake forces to available brakes, controls the automatic brake test and continuity check, generates diagnostic data for the power car, and initiates emergency braking electrically. Each power car has one HSM-MGS unit which exchanges data with the second power car, the coaches, and other electronic devices on board via a serial interface. Data distribution is organized by the train control unit (ZSG).

In revenue service on the DB, there is no emergency brake valve available for passenger access, only crew notification of an emergency. For demonstration in the U.S., however, passenger emergency brake applications could be initiated electrically by opening the emergency loop circuit with pull boxes in the coaches, venting the pre-control pressure holding the vent valve (NB11) with the magnet valve (SBV).

The ICE power cars are equipped with "deadman" control which interface with one of the two magnets (FGN) which, when deenergized, cause a full service pneumatic brake application. The deadman control, however, can be pneumatically cut out by a cock (Ref. 4).

Wheelslip Protection. Compressed air for the automatic air brake system is supplied by a Type SL20-5 rotary screw compressor in each power car, each of which provides about 2170 litre/minute (76.6 CFM) at a pressure of 10 bar (145 psig) at a rotational speed of 3400 rpm. Each compressor is driven by a three-phase AC motor at about a 22.5 kW power level. One compressor can supply the requirements of the whole train. The compressor has an integrated cooler, and air then passes through a dual chamber air dryer with integrated oil separator. A heating cartridge is mounted on the drain valve to avoid condensate freezing in winter.

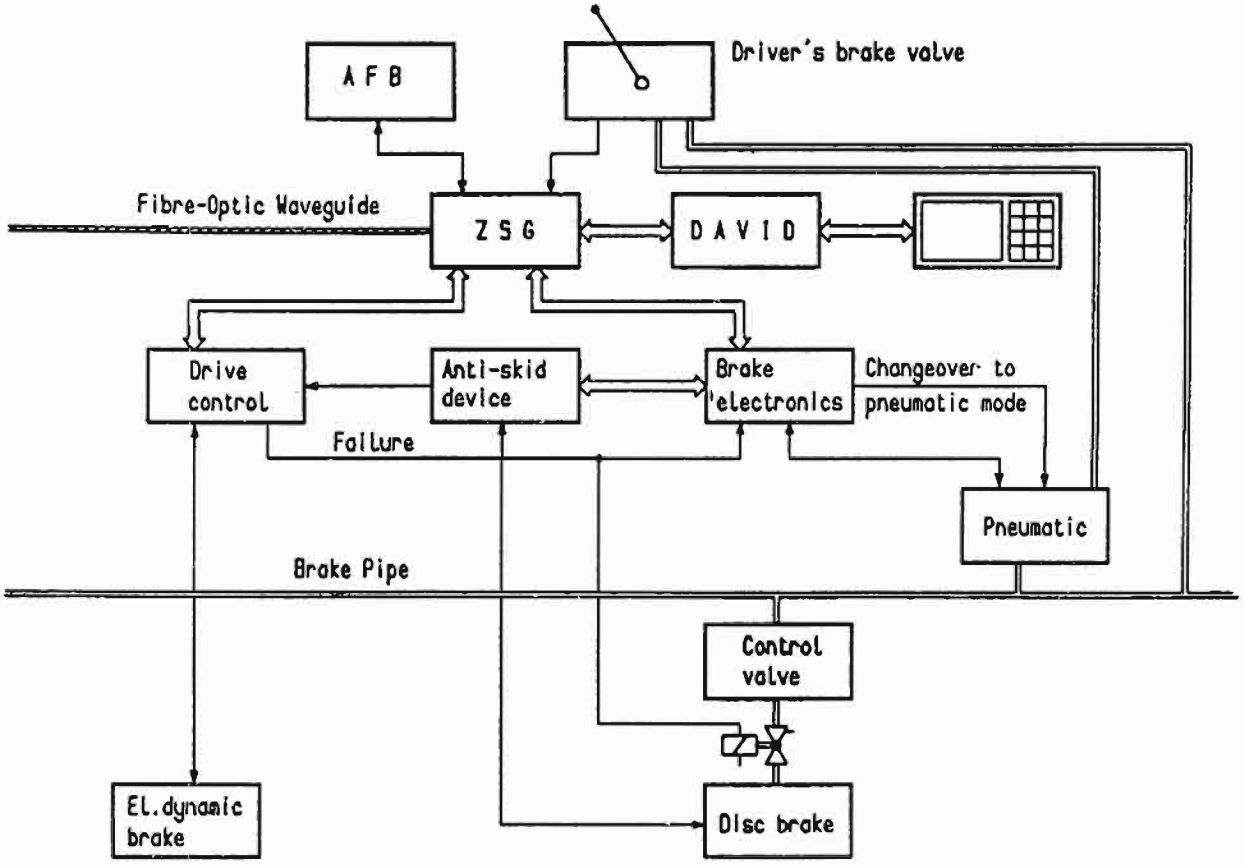

FIGURE 2-3. BRAKE CONTROL SCHEMATIC FOR ICE POWER CAR [REF. 5]

The main air reservoir pressure switch is set (for U.S. operation) to cycle between 8.5 bar (123 psig) and 10 bar (145 psig); and the safety valve is set at 10.5 bar (152 psig).

The brake control and anti-skid device (MGS-SVB) is located in the center trailer car in a single 19-inch rack. This unit controls the trailer car anti-skid functions, processes signals commanding the electropneumatic solenoid valves for the main reservoir pipe pressure control, processes brake diagnostic information, and controls the magnetic track brakes. The unit communicates with the diagnostic computer and with the fiber optic train data bus through an RS 485 bus. Brake control signals are passed directly to the unit, bypassing the diagnostic computer, to assure fast response.

The SVB portion of the device detects the condition of each brake on the cars (pneumatic and hand brakes), monitors the operational ability of brakes, and processes this information to generate detailed status and fault messages. These data and reports are transmitted via the train data bus during both tests and in service. In addition, the unit monitors (and blocks, in the event of failure) commands to the EPZ solenoid valves.

The MGS portion of the device provides microprocessor control of wheel slip through modulation of brake cylinder pressure. Control logic is based on individual axle acceleration and speed criteria to maintain braking force at optimum levels without loss of adhesion.

The anti-skid (wheel slip control) device reads the signal from a speed sensor, which is an 80-tooth ferromagnetic gear wheel on each axle scanned by a stationary magnetic pickup. These pulses are used to determine wheel rotational speed and change in speed, and these data are then processed to detect wheel slip through approximately 30 combined speed and retardation criteria. The microprocessor controls the anti-skid valve, which is in turn connected pneumatically to the distribution valve, allowing brake cylinder pressure to be momentarily reduced to restore the wheelset torque balance. The unit has non-volatile memory and an additional microprocessor-independent safety circuit to assure reliability.

The anti-skid device on the power car interfaces with the traction control as well as the dynamic and friction braking systems to assure optimum use of adhesion during both power and braking modes.

2.4 TGV ATLANTIQUE—TRAIN A GRANDE VITESSE (FRANCE)

2.4.1 Trainset Description

The French National Railway (SNCF) Train a Grande Vitesse (TGV) represents a French high-speed rail technology that has been in successful service operation since 1981. To date, SNCF has transported over 160 million people on two operating TGV lines with an impressive safety record.* The TGV Sud-Est (TGV-SE) has been in revenue operation since 1981 at a maximum speed of 270 km/h (168 mph). Planning for the TGV Atlantique (TGV-A), began in 1978 and construction was started in 1985. The TGV-A provides high-speed service between Paris and Brittany and Bordeaux. Over sections of dedicated right-of-way, the train operates at normal service speeds of 300 km/h (186 mph). On conventional lines, the speed is restricted to 220 km/h (137 mph). Maximum gradients on these lines is 2.5 percent (1 in 40), less than the 3.5 percent (1 in 28.5) on the TGV-SE lines to Lyon.

The TGV-A consists of the following equipment:

- two power cars (two 2-axle bogies each, 8 axles total at 17 metric tons/axles),
- two transition cars connected by articulated joints (one 2-axle bogie, one shared, 2-axle bogie each, 6 axles total at 17 metric tons/axle, maximum under any operating condition), and

*In a recent incident, an undetected underground WWI bunker collapsed beneath the track, causing a 7-meter-long hole. A TGV travelling at about 295 km/h passed over the hole, which derailed the last four cars of the train. In braking to an emergency stop in over 2 km, the four cars remained upright and only one of 200 passengers was slightly injured.

- eight trailing cars connected by articulated joints (2 shared bogies each, 16 axles total at 17 metric tons/axle, maximum under any operating condition).

The TGV-A trainset weighs 475 metric tons (523 tons) with a normal passenger load. The trainset length is 237.59 meters (779 ft-6 in). This trainset includes many technological advances including: 1) three-phase synchronous traction motors, 2) carbody mounted traction motors with a unique sliding tripod transmission, 3) articulated intercar connections forming a fixed consist arrangement, 4) very high-speed stucks with a unique pueumatic secondary suspension, and 5) a computerized communication network for distributed train control.

2.4.2 Brake System Description

The TGV braking system consists of a combination of dynamic/resistive, electropneumatic, and friction braking which are blended automatically. The TGV train has an electropneumatic two-pipe brake system specifically designed for high-speed operation, which conforms to UIC standards. A key feature of the braking system is the control, from a brake demand, on a per-trick basis. To achieve this, each truck has its own pneumatic brake control panel. In addition, wheel slide protection is provided on a per-axle basis for the trailer trucks. Other salient features of the brake system include 1) fixed-consist operation, 2) on-board monitoring and diagnostics, 3) advanced train control systems, and 4) a failsafe, fault tolerant design.

Dynamic/Resistive Brake. The dynamic/resistive braking provides a large portion of the braking power using independent systems for each driving bogie on the power cars. The proportion of electric brake effort provided, however, varies with speed and the brake demand. Normally the dynamic brake is powered from the catenary, but there are backup batteries for each driving truck. Resistor grids are located on the roof of power cars. The power is not fed back to catenary, but always dissipated into heat, avoiding loss of dynamic braking in the event of catenary power loss or rejection. The dynamic/resistive brake has a maximum power level of 1620 kW/truck, or about 6480 kW for the trainset.

Friction Brake. The pneumatic friction brake system powers all axles of the trainset. These brakes are controlled by commands transmitted through brake pipe pressure changes, complemented by an electropneumatic train line for faster response throughout the length of the train. Non-driving axles are equipped with two double disc brakes (eight brake cylinders per truck) and four non-ventilated discs with alloy steel discs and sintered metal linings (pads) to withstand higher temperatures. Power cars are equipped with tread brakes on the wheels of the driving bogies.

Braking Control Components. The principal control mechanisms for the braking system are:

- the traction controller wheel that controls dynamic braking,
- the driver's automatic brake valve that controls the air brakes, and

- emergency "punch" valves in the cab and emergency brake valves for crew use to initiate emergency braking.

The train operator (driver) controls acceleration/deceleration by means of the traction controller wheel, which sets the intensity of the function (traction power or dynamic braking). Braking is also controlled through the driver's automatic brake valve (ABV) through the electrical train line and EP valves, or through pneumatic control of the brake pipe directly. Uniform distribution of a command brake pipe pressure reduction is achieved by the electropneumatic valves for each truck.

Braking is blended automatically by the computer to maximize dynamic braking. Blending will use the dynamic brake up to its maximum power level (1620 kW) and distribute the remaining braking power to the trainset friction brakes. Tread brakes on the powered bogies are used only as the train nears a stop, or as a backup to the dynamic brake in case of a failure.

The driver is responsible for normal on-board operational train control, assisted by microprocessor monitoring and display. The dynamic brake function is available to the driver through the traction-braking master controller. This controller permits the driver to apply power per brake to control train speed. A separate control allows access to the air brakes for the trainset via the brake pipe. When this control is used, the control computers will normally rely on dynamic braking with no reduction in brake pipe pressure until required for additional braking effort. This reduces friction wear. Separate microprocessors control traction-braking of each motor truck.

Independent from the ABV are additional brake control features including 1) Automatic Train Control (ATC), 2) deadman control, 3) emergency "punch" valves in the cab (two), and 4) emergency brake valves in cars T1 and T3 for crew use. Passengers have no direct access to emergency brakes per se, but instead have emergency signals which alert the crew to problems.

Wheelslip Protection. Pressure is modulated at additional EP valves on each axle by the electronic anti-skid control units. A separate EP valve on the truck changes braking effort level as a function of train speed. Electrical speed sensors provide the axle speed signals for both slip control and braking level functions. Separate microprocessors on each trailer car truck similarly provide wheel slip control in braking and fault detection. The TGV is equipped with independent, hard-wired safety timers on every anti-skid device. This prevents loss of braking effort for too long a period on any axle in the event of a failure of the main and back-up wheel slide systems.

2.5 INTERCITY 225 (GREAT BRITAIN)

2.5.1 Trainset Description

The InterCity 225 trainsets were procured between 1988 and 1990 to operate at speeds of up to 225 km/h (140 mph) over the recently electrified East Coast Main Line. The principal routes are:

London-Doncaster-Leeds
London-York-Edinburgh-Glasgow

The routes had previously used InterCity 125 trainsets operating at speeds up to 201 km/h (125 mph). The IC225's operate in fixed formations of a Class 91 electric locomotive, nine MkIV trailer coaches, and a MkIV Driving Van Trailer. There are 31 trainsets operating 26 daily diagrams. The trainsets are currently operating at a maximum speed of 201 km/h, due to signalling and operational constraints.

2.5.2 Brake System Description

The InterCity 225* trainset is fitted with a two-pipe Automatic Air Brake System and a dynamic/resistive brake. The Class 91 locomotive equipment was supplied by Davies and Metcalfe (D&M). The MkIV passenger coach equipment was supplied by Westinghouse Brakes.

Dynamic/resistive Brake. The Class 91 Electric Locomotive is fitted with a fully rated dynamic/resistive brake, one unit per bogie. The dynamic/resistive brake uses the locomotive's batteries to establish the field currents in the motors during dynamic braking, thus, the dynamic brake remains operational in the absence of an overhead line supply. Dynamic braking is available in all braking steps including emergency.

Friction Brake. The locomotive has two friction brake systems. First, disc brake units are fitted on each of the four body-mounted traction motors, the calipers of which are fitted with non-asbestos brake pads. Second, the bogies are fitted with air-operated tread brake units using composition block materials. The tread brake units also incorporate a separate hydraulic apply-and-release parking brake actuator. The disc and tread brake systems operate in parallel.

The D&M two-stage compressors are fitted to supply air via a check valve to the main reservoir supply. The compressors operate under the control of a main reservoir supply governor starting and stopping the compressors to maintain a nominal 10 bar (145 psig) pressure. The system is protected by a safety valve set at 10.7 bar (155 psig). The air is cooled externally and fed to the four main reservoirs which are mounted one externally and

*The separate appendix to this report also contains a description of the InterCity 125 trainset. The IC 125 braking system is essentially the same as the IC 225 friction brake system. The IC 125 has no dynamic brake.

three within the body. Condensate is removed by automatic drain valves. The locomotive is not fitted with an air dryer. For winter operation, antifreeze is introduced into the air system.

The tread brake unit is mounted on the bogie acting independently on each wheelset. Each unit contains the service brake cylinder which is air applied and a hydraulic apply-and-release parking brake actuator.

The MkIV passenger coach and the MkIV Driving Van Trailer (DVT) friction brake systems consist of three axle-mounted brake discs which are fitted to each wheelset, using non-asbestos brake pads.

Braking Control Components. The principal control mechanisms for the braking system are:

- the driver's brake controller that controls both dynamic and air brakes through brake pipe pressure,
- the brake controller emergency position that causes the brake pipe to be vented directly, and
- the driver's emergency plunger that also causes the brake pipe to be vented directly.

The Class 91 locomotive regulates the air brake pipe (ABP) by a version of the D&M E70 brake control unit. The D&M E70 brake unit controls the ABP pressure in seven steps using a three-wire binary coded signal between the driver's brake controller and the brake unit. The air brake pipe control signal is fed to a relay valve to charge/vent the ABP. The E70 unit generates the control signal using electronically controlled electropneumatic valves monitored by pressure transducers to produce the appropriate control signal corresponding to the brake demanded by the train wire signal. The control unit obtains its air supply from the locomotive main reservoir supply.

The two bogies of the locomotive have independent brake control systems. Each bogie has its own graduated apply and release "UIC" style distributor connected to the ABP. Each distributor has a dedicated brake supply reservoir charged via a check valve from the locomotive's nominal 10 bar (145 psig) main reservoir supply (MRS). In the event of no MRS supply, the brake supply reservoirs can be charged via the distributor from the ABP.

The brake control system provides the control of the two dynamic/resistive brake units, one per bogie. The amount of rheostatic brake required is derived from the distributor output pressure. The control unit also reduces rheostatic duty above 201 km/h (125 mph) to match the friction brake duty. The control unit monitors the performance of the rheostatic brake and converts this into a pneumatic signal that is fed to the brake relay valve to hold off the equivalent friction brake. This ensures that the rheostatic brake is fully blended with the friction brake.

The MkIV passenger coach has a single "UIC" style graduated apply-and-release distributor which is connected to the ABP. The distributor has a dedicated auxiliary reservoir which can be charged via the distributor from the ABP. The distributor supplies an air pressure signal to a two-stage variable load relay valve. The output pressure from the relay valve is fed to the brake actuators which are fitted to the bogie mounted brake calipers.

The MkIV Driving Van Trailer (DVT) friction brake system is basically the same as that fitted to the MkIV passenger coach, with the principal exception being that each bogie has its own two-stage relay valve due to differing bogie loads.

Wheelslip Protection. The locomotive is fitted with a GEC wheel slide protection (WSP) system which operates on individual wheelsets. The WSP was originally linked to a doppler speed sensing system; however, this feature has been isolated, relying solely on wheelset generated speed signals. The MkIV passenger coaches are fitted with a Faiveley wheel slide protection (WSP) system which operates on a local vehicle basis acting on individual wheelsets.

2.6 SHINKANSEN (JAPAN)

2.6.1 Trainset Description

The Shinkansen (New Railway) is the successful Japanese high speed rail service, sometimes referred to as the Japanese "bullet" trains. The Tokaido Shinkansen has carried over 2.5 billion passengers since the inauguration of service on the New Tokaido Line in 1964. To this original line between Tokyo and Osaka, three other lines have been added: the Sanyo line, Osaka to Hakata (Kyushu); the Joetsu to Niigata; and the Tohoku line to Morioka and eventually to Sapporo (Hokkaido).

Three different series of trainsets are used in service. The 100 series trains consist of 12 motor cars (all axles powered by DC traction motors) and 4 trailer cars with a trainset weight of 925 metric tons. These are run in service at 220 km/h (137 mph) maximum speed, however, newer cars in current use on the Tokaido line are run at 240 km/h (150 mph). A 200 series in 12-car trainsets has all axles powered by slightly more powerful motors (230 kW vs. 185 kW) than the 100 series to cope with steeper gradients on other lines. Finally, the newest 300 series in the "Nozomi" service has increased the top speed from 220 to 270 km/h (168 mph). This trainset consists of 12 motored cars (all axles powered by AC cage asynchronous traction motors) and 4 trailer cars. By use of aluminum car structures, the trainset weight has been reduced to 710 metric tons.

2.6.2 Brake System Description

The three Shinkansen trainset series apply somewhat different braking system design philosophies. Prior to 1978, the electric cars in Shinkansen service were equipped with a straight air pipe system of air brakes. Since 1978, an all-electric command brake control system has been used, starting with the 100 series cars. Brake systems of all three series

(100-300) are based mechanically on a pneumatic/hydraulic conversion disc brake, supplemented by dynamic (rheostatic or regenerative) braking on powered axles and eddy current brakes on non-powered trailer car axles.

The principal differences in the trainset braking philosophies are noted in Table 2-2 (Ref. 6). The newer 200 series cars may have incorporated some of the features of the 300 series brake design, but this was not confirmed at the time of this report.

TABLE 2-2. BRAKING SYSTEM DESIGN OVERVIEW FOR SHINKANSEN TRAINSETS

Trainset	Brake System Design Attributes
100	• Dynamic/resistive brake • Electrically-controlled air brake system • Eddy current brake system on trailer cars • Continuous control along adhesion pattern
200	• Dynamic/resistive brake • Electromagnetic straight air brake system • Continuous control to ATC speed step
300	• Dynamic/regenerative brake • Electrically-controlled air brake system • Eddy current brake system on trailer cars with load response device • Continuous control along adhesion pattern

Dynamic Brake. Dynamic braking is used on all Shinkansen trainset series. The 300 series has a dynamic/regenerative brake and the other series rely on a dynamic/resistive brake.

Friction Brake. The friction brake system is an electrically-controlled, pneumatic/hydraulic conversion disc brake. Cars carry two-wheel cheek-mounted discs per axle. The electropneumatic changeover valve receives an electric current command, converting this to an air pressure command, which is amplified by the relay valve. In the air-hydraulic booster, air pressure is converted into pressurized oil. The mechanical friction brake calipers are then actuated by an hydraulic cylinder. This sequence is illustrated in the schematic diagram, Figure 2-4, for the 200 series cars (Ref. 7).

Braking Control Components. The Shinkansen trainsets use an all-electric brake command system to control braking in three modes.

- Service braking, commanded by the automatic train control (ATC) or by the operator, for the dynamic and pneumatic/hydraulic brakes in blended braking,

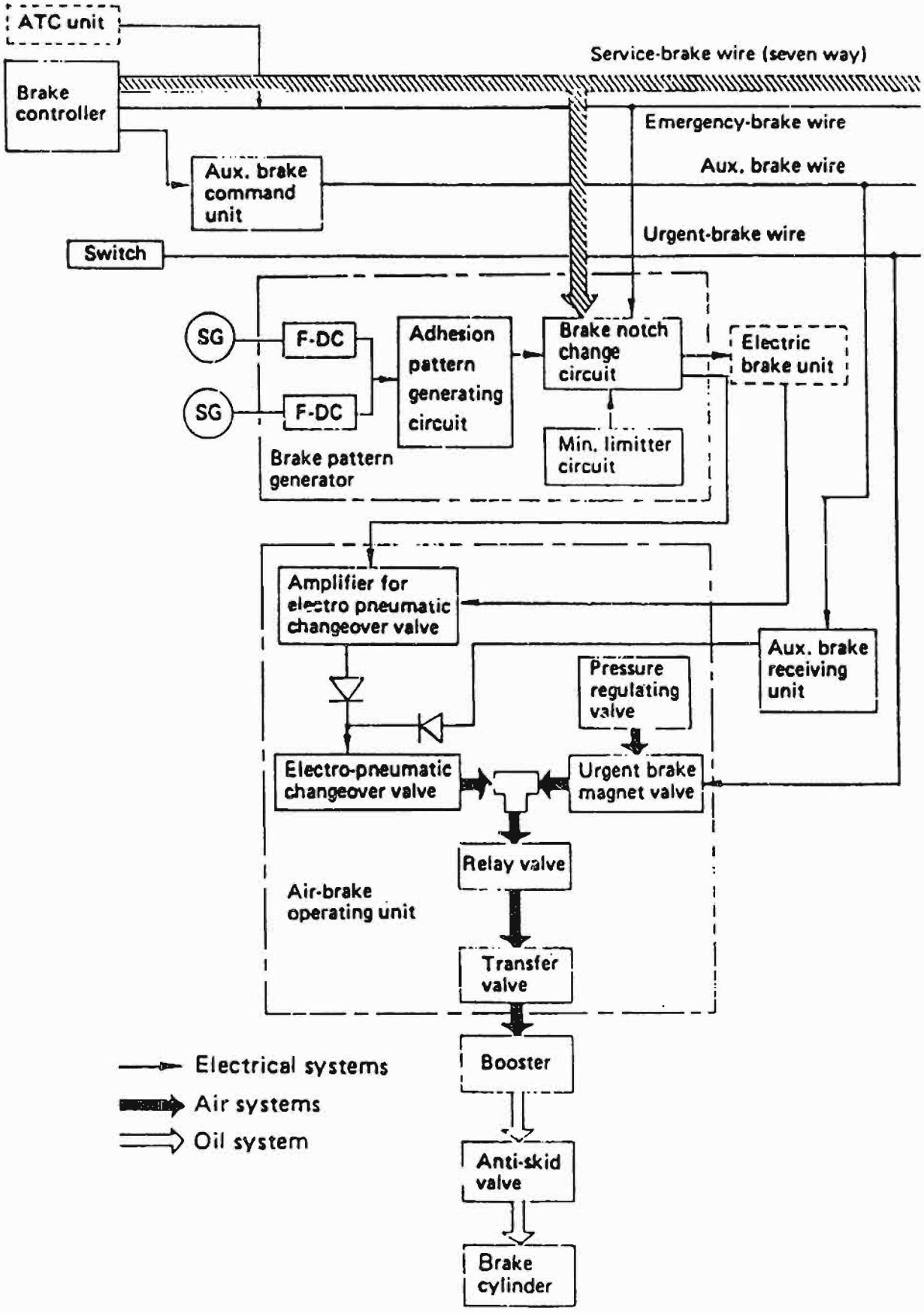

FIGURE 2-4. SCHEMATIC DIAGRAM OF SERIES 200 TRAINSET BRAKE SYSTEM [REF. 7]

- Emergency braking, commanded by ATC, the operator, or loss of power, and

- Urgency braking on individual cars running in abnormal conditions (in lieu of service or emergency braking), commanded by ATC, the operator, or loss of power.

The brake system for the Series 200 cars is controlled by electric commands over eight command levels carried over the train bus (Figure 2-4). Commands for braking effort range in seven steps (1N to 7N) up to full service braking, using a grey code (three-wire) system. A separate line commands the eighth (emergency) level. A separate "urgency" brake circuit controls the brakes of a car in abnormal conditions, such as train separation, electric power loss, or a shortage of brake force. The seven service brake levels are energized in sequence as commanded by the driver's brake controller or by the automatic train control (ATC). The emergency brake line is normally energized and is deenergized when emergency braking is commanded. Braking force in emergency is 50 percent higher than in full service (7N) braking. The urgency brake is also commanded from a normally-energized line.

The braking command line signals are interpreted by the brake pattern generator which, in conjunction with the signal from a tachometer-generator (SG in Figure 2-4) and the locally-stored speed-adhesion characteristic, sends a speed-modified signal to the chopper control equipment. This controls the electric brake unit and the electropneumatic changeover valve amplifier. Priority blending of brakes uses the dynamic (electric) braking to its maximum level to reduce wear on friction brake components. Speed-adhesion characteristics and anti-skid control modulate the braking force to avoid sliding the wheels.

In the Series 300 cars, both the service and emergency brake levels are designed to control the braking force according to load condition and individual car weight condition, in addition to the speed-adhesion characteristics (Ref. 8). The urgency brake uses a two-step control to compensate for lower adhesion at higher train speeds. The service brake usually applies the electrical (dynamic regenerative) brakes with the pneumatic/hydraulic powered friction brakes taking over in the lower speed range. Emergency braking force is 40 percent higher than the full service (7N) braking level.

2.7 ETR450 (Italy)

2.7.1 Trainset Description

The Italian ETR450 trainsets have been in revenue service on the main lines of the Italian State Railways (FS) since early in 1990. Derived from the ETR401 passive tilting "Pendolino" trains, the ETR450 trains incorporate an aluminum body and an active tilting system based on accelerometers and gyroscopic sensors that control each car's hydraulic actuators. The bogie design includes radial steering trucks, flange lubricators, and anti-skid devices. Each bogie is powered by a 312.5 kW traction motor mounted longitudinally on the car body, driving through a U-joint drive shaft, bevel gear final drive and Cardan shafts. Trainset pantographs are carried on bogie-supported frames to allow the cars to tilt up to a maximum allowed eight degrees without interfering with power pickup from the catenary.

ETR450 trainsets are currently run in formations of eight powered cars (four sets of "married pairs") and one trailer car. With each powered car of 50 metric tons and a trailer car of 30 metric tons nominal weight, the total train weighs 430 metric tons (474 tons) with an overall length of 242 meters. The design maximum speed of 250 km/h (155 mph) is realized on the Rome-Florence Direttissima line. On other lines, train speed is limited to a maximum of 200 km/h (125 mph). These other lines include service between Rome-Naples-Salerno, Bologna-Padua-Venice, and Bologna-Milan-Turin.

2.7.2 Brake System Description

The ETR450 train braking system includes both air-activated friction brakes and dynamic/resistive braking. A maximum 7800 kW braking power is achieved with both friction and dynamic braking.

Dynamic/resistive Brake. Traction motors are used to generate a maximum of 1900 kW braking power at speeds above 80 km/h (50 mph). In electrodynamic braking, traction motor armature current is controlled by a shunt-chopper system. Generated power is dissipated in self-ventilated resistor grids on the car body roof.

Friction Brake. Disc-type air brakes are used for the friction brake system. Each axle is equipped with two ventilated cast iron brake discs with synthetic brake pads on the brake calipers. Each bogie has four brake cylinders (one per disc) with automatic slack adjustment. The air brake system main line charge/discharge solenoid valves are triggered electrically to speed the brake command propagation along the length of the train.

Wheelslip Protection. Anti-skid/anti-slip devices are included on each bogie to prevent wheel slip during traction or braking and to optimize wheelset adhesion under adverse rail conditions.

Braking Control Components. ETR450 trainset performance is controlled from an ergonomically designed driver's cab, which provides instrumentation, control and monitoring equipment in an aircraft-style display. The brake valve includes an electronic device controlling the individual charge/discharge solenoid valves along the train. Braking systems are blended in five successive stages: the first is fully electrodynamic braking, which is used preferentially to reduce wear on friction brake components and to maintain train speeds, for example, on long downgrades. Subsequent command levels act in conjunction with the friction brakes within the speed range from 250 to 80 km/h. Below 80 km/h, only the friction brakes are active. In the event of an emergency, continuous pneumatic braking control is automatically actuated.

2.8 SUMMARY OF HIGH SPEED RAIL BRAKE EQUIPMENT

As described in the previous sections, the high speed rail trainsets share many similarities in braking system design and operation. While the specifics of individual systems may vary, such as the number of discs per axle, all rely on dynamic and pneumatic brakes to provide the principal braking force. Table 2-3 provides a summary of the braking equipment for the high speed rail trainsets, and Table 2-4 provides a summary of the brake system performance factors.

TABLE 2-3. SUMMARY OF HIGH SPEED RAIL BRAKING EQUIPMENT

Trainset	Top Service Speed	Braking Systems		Typical Consist
		Locomotive/Power Car	Passenger Coach/Trailer Car	
Amtrak Metroliner (United States)	201 km/hr (125 mph)	a. Dynamic brakes, resistive. b. Pneumatic disc brakes, two wheel-mounted discs, outboard axles only. c. Pneumatic tread brakes, single shoe.	a. Pneumatic disc brakes, two ventilated discs per axle. b. Pneumatic tread brakes, two per wheel.	1 AEM-7 electric locomotive and 6 Amcoach passenger cars.
ICE—InterCity Express (Germany)	280 km/hr (174 mph)	a. Dynamic brakes, regenerative. b. Electropneumatic disc brakes, two non-ventilated discs per axle.	a. Electropneumatic disc brakes, four ventilated discs per axle. b. Electromagnetic track brakes.	2 power cars and up to 12 trailer cars.
TGV—Train a Grande Vitesse (France)	300 km/hr (186 mph)	a. Dynamic brakes, resistive. b. Electropneumatic tread brakes.	a. Electropneumatic disc brakes, four non-ventilated discs per axle.	2 power cars and 10 trailer cars (includes 2 transition cars).
X2000 (Sweden)	200 km/hr (124 mph)	a. Dynamic brakes, regenerative. b. Electropneumatic disc brakes, wheel-mounted discs, all wheels. c. Electropneumatic tread brakes, one per wheel.	a. Electropneumatic disc brakes, two ventilated discs per axle. b. Electropneumatic magnetic track brakes, four per car.	1 locomotive (power car), 4 trailer cars, and 1 driving trailer car (cab control car).

TABLE 2-3. SUMMARY OF HIGH SPEED RAIL BRAKING EQUIPMENT (cont.)

Trainset	Top Service Speed	Braking Systems		Typical Consist
		Locomotive/Power Car	Passenger Coach/Trailer Car	
Intercity 225 (Great Britain)	225 km/hr (140 mph)	a. Dynamic brakes, resistive. b. Electropneumatic disc brakes, c. Electropneumatic tread brakes.	a. Electropneumatic disc brakes, three discs per axle.	1 Class 91 electric locomotive, 9 MkIV trailer coaches. and 1 MkIV driving van trailer.
Shinkansen 200 (Japan)	220 km/hr (137 mph)	a. Dynamic brakes, resistive. b. Electrically-controlled, pneumatic/hydraulic conversion disc brakes, two wheel-mounted discs per axle.	N/A	12 motored cars.
Shinkansen 300 (Japan)	270 km/hr (168 mph)	a. Dynamic brakes, regenerative. b. Electrically-controlled, pneumatic/hydraulic conversion disc brakes, two wheel-mounted discs per axle.	a. Electrically-controlled, pneumatic/hydraulic conversion disc brakes, two wheel cheek-mounted discs per axle. b. Eddy current brakes.	12 motored cars and 4 trailer cars.
ETR450 (Italy)	250 km/hr (155 mph)	a. Dynamic brakes, resistive. b. Electropneumatic disc brakes, two ventilated discs per axle.	a. Electropneumatic disc brakes, two ventilated discs per axle.	8 powered cars and 1 trailer car.

TABLE 2-3. SUMMARY OF HIGH SPEED RAIL BRAKING EQUIPMENT (cont.)

Trainset	Top Service Speed	Braking Systems		Typical Consist
		Locomotive/Power Car	Passenger Coach/Trailer Car	
ETR450 (Italy)	250 km/hr (155 mph)	a. Dynamic brakes, resistive. b. Electropneumatic disc brakes, two ventilated discs per axle.	a. Electropneumatic disc brakes, two ventilated discs per axle.	8 powered cars and 1 trailer car.

TABLE 2-4. BRAKE SYSTEM PERFORMANCE FACTORS

Trainset	Tare Weight (Typical Consist)	Top Service Speed	Brake Rate	Stopping Distance
Amtrak Metroliner (United States)	366 metric tons (404 tons)	201 km/hr (125 mph)	2.7 km/hr/s (1.7 mph/s) Friction only 2.9 km/hr/s (1.8 mph/s) Full service; friction + dynamic 3.5 km/hr/s (2.2 mph/s) Emergency; friction only all @ 194 km/hr (120 mph)	1950 m (6400 ft) Friction only 1800 m (5900 ft) Full service; friction + dynamic 1490 m (4900 ft) Emergency; friction only all @ 194 km/hr (120 mph)
ICE—InterCity Express (Germany)	784 metric tons (864 tons)	280 km/hr (174 mph)	0.9 km/hr/s Dynamic only @ 140 km/hr (87 mph) 3.2 km/hr/s (2.01 mph/s) Friction only 5.0 km/hr/s (3.12 mph/s) Maximum with all systems	2020 m (6627 ft) Friction only 1750 m (5741 ft) Friction + dynamic 1610 m (5282 ft) Friction + magnetic track 1440 m (4724 ft) Friction + dynamic + magnetic track all @ 210 km/hr (130 mph)
TGV—Train a Grande Vitesse (France)	475 metric tons (523 tons)	300 km/hr (186 mph)	1.56 km/hr/s (0.97 mph/s) Operational braking 3.57 km/hr/s (2.20 mph/s) Maximum emergency	1150 m (3772 ft) @ 180 km/hr (112 mph) 3200 m (11,480 ft) @ 300 km/hr (186 mph) emergency braking, dynamic brake on batteries
X2000 (Sweden)	343 metric tons (380 tons)	200 km/hr (124 mph)	1.77 km/hr/s (1.1 mph/s) Maximum service braking 1.53 km/hr/s (0.95 mph/s) Magnetic track brake only	1450 m (4757 ft) Full service 1100 m (3609 ft) Emergency all @ 200 km/hr (124 mph)

TABLE 2-4. BRAKE SYSTEM PERFORMANCE FACTORS (cont.)

Trainset	Tare Weight (Typical Consist)	Top Service Speed	Brake Rate	Stopping Distance
Intercity 225 (Great Britain)	476 metric tons (525 tons)	225 km/hr (140 mph)	3.39 km/hr/s (2.1 mph/s) Full service required @ 201 km/hr (125 mph)	1770 m (5807 ft) required @ 201 km/hr (125 mph)
Shinkansen 200 (Japan)	970 metric tons (1070 tons)	220 km/hr (137 mph)	1.3 km/hr/s (0.8 mph/s) Full service 2.0 km/hr/s (1.2 mph/s) Emergency 2.8 km/hr/s (1.7 mph/s) Urgency brake all @ 220 km/hr (137 mph)	Not available.
Shinkansen 300 (Japan)	710 metric tons (780 tons)	270 km/hr (168 mph)	1.3 km/hr/s (0.8 mph/s) Full service 1.8 km/hr/s (1.1 mph/s) Emergency 2.2 km/hr/s (1.4 mph/s) Urgency brake all @ 270 km/hr (168 mph)	Not available.
ETR450 (Italy)	430 metric tons (474 tons)	250 km/hr (155 mph)	Not available.	Not available.

3. SYSTEM SAFETY ANALYSIS OF HIGH SPEED RAIL BRAKING SYSTEMS

The system safety analysis of the high speed rail braking systems is a high-level examination of system failure modes to identify the inherent protection included in the system designs. In general, the failure modes for each trainset are established at a subsystem level for two reasons. First, this level of detail is sufficient for the purposes of this study and second, the available information is insufficient to allow a more detailed examination.

As an example, a braking control system may be considered as a single unit with failure modes described as "fails such that too little braking is commanded" or "fails such that too much braking is commanded." A detailed evaluation of the control system would be required to establish the specific conditions that would lead to these control system failures (or even if those failure modes are possible in some cases). However, examining the system's response to this postulated failure mode can identify the inherent protection (or lack of inherent protection) for the failure mode. This type of result is believed adequate for the purposes of establishing regulatory priorities.

3.1 SIGNIFICANCE OF FAILURE MODES

The significance of the failure modes identified in the safety analysis is described in two ways. First, each failure mode was assessed to determine if it was fault tolerant or fail safe, according to the working definitions presented in the next section. Second, if a failure mode was judged to be not fail safe, the failure mode was examined to determine the severity of the failure mode as described below. These two factors determine the importance of the failure mode in the safety analysis results.

3.1.1 Working Definitions

The two key definitions employed in the safety analysis are based on the concepts of fault tolerant and fail safe.

Fault Tolerant is defined as the built-in capability of a system to provide continued (full or limited) operation in the presence of a limited number of faults or failures. As applied in the safety analysis, continued operation means continued train operation with most braking capability intact and, in the absence of subsequent failures, continued train operation does not result in an immediate or subsequent hazard to train operations, passengers, or significant equipment damage.

Fail Safe is defined as a characteristic of a system or its elements whereby any failure or malfunction affecting safety will cause the system to revert to a state that is known to be safe. As applied in the safety analysis, fail safe means failures in the brake system such that the train results in a safe condition. Safe condition means the train will come to a full stop without loss of human life, injury to persons, major loss of equipment, or any combination of

the three; or full brake capability is retained without additional operator action required to initiate braking. Thus by definition, operator backup for the braking system is not a fail safe condition. This approach permits identification of the operator's contribution to recovering the braking function in the event of failure through the use of severity codes, as described below.

3.1.2 Failure Mode Severity

Since the above definition of fail safe permits a number of failure modes to be designated as not fail safe, the failure mode severity scale shown in Table 3-1 was employed to distinguish among those failures. These severity codes distinguish between three types of failures that are defined as not fail safe.

- Failure modes that result in loss of train-wide braking capability with no means of recovery (codes A1 and B1).
- Failure modes that result in loss of train-wide braking capability, but is recoverable through direct operator action or control (codes A2 and B2).
- Failures modes that result in loss of local braking capability (an axle, a truck, or a car) (codes A3 and B3).

Failure modes that were defined as fail safe, whether they are fault tolerant or not, are considered as having lesser severity.

The following section discusses the results of the safety analyses for six of the high speed rail trainsets in terms of these severity codes.*

3.2 RESULTS

This section provides a summary of the results of the failure modes and effects analyses of the high speed rail braking systems for each of the severity categories defined above. The detailed FMEA worksheets for the braking systems are provided in a separate, limited distribution report.

*The ETR450 is not included. Insufficient information was available to permit a meaningful failure modes analysis.

TABLE 3-1. FAILURE MODE SEVERITY CATEGORIES

Fault Tolerant	Fail Safe	Severity	Description
No	No	A1	A failure that results in an immediate hazard potentially leading to a catastrophic condition.
		A2	A failure that results in a subsequent hazard, but is recoverable to a safe condition by operator action.
		A3	A failure that results in a subsequent hazard potentially leading to an unsafe condition over time if not corrected.
Yes	No	B1	A permitted or unannounced failure potentially leading to a catastrophic condition.
		B2	A permitted or unannounced failure that results in reduced braking capability, but is operator-recoverable to a safe condition.
		B3	A permitted or unannounced failure that results in reduced, but sufficient, braking capability.
No	Yes	C	A failure that represents a subsequent hazard, however the system remains in a safe condition.
Yes	Yes	D	A failure that represents no significant hazard and results in a safe condition.

The failure modes analysis resulted in over 300 failure mode definitions for the high speed rail braking systems, or approximately 44 failure modes for each braking system. The overall distribution of the failure modes versus their severity is as follows.

Severity	Percentage of Failure Modes
A1	0%
A2	9%
A3	10%
B1	0%
B2	6%
B3	27%
C	21%
D	27%

This distribution indicates that only 19% of the failure modes were considered to be both not fault tolerant and not fail safe (severities A1, A2, A3). About 33% of the failure modes were judged to be fault tolerant but not fail safe (severities B1, B2, B3). The remainder of the failure modes, approximately 48%, were judged to be fail safe. This distribution of failure modes versus severity is reasonably consistent for all the high speed rail trainsets examined in this study. The following paragraphs provide general descriptions of the failure modes that were judged to be not fail safe.

Severity Categories A1 and B1. These categories represent failure modes that result in loss of train-wide braking capability with no means of recovery. No failure modes were identified in this category for any of the trainsets considered in this study.

Severity Category A2. This category includes failures that represent a subsequent hazard to the trainset braking capability, but is recoverable to a safe condition by operator action. Approximately 9% of the failure modes were judged to be in this severity category.

The failure modes in this category represent control system component failures that result in too little or no braking when required. All of the high speed trainsets examined in this study exhibit failure modes in this category. All have backups through operator application of emergency braking. Some of the trainsets, such as the TGV, also have a degree of automatic redundancy through the use of dual control computers, and the ATC system directly activates the emergency brake by venting the brake pipe to ensure safety without operator intervention.

Another failure mode assigned to this category is failure of a traction motor such that an axle is locked and results in wheel slide. This failure mode, considered a rare failure, would require the operator to stop the train to minimize damage to the affected truck and wheelset.

Severity Category A3. Failures in this category represent local failures that represent a subsequent hazard if the train continues to operate. Approximately 10% of the failure modes were judged to be in this severity category.

These failures focus on individual actuators that fail such that a friction brake (pneumatic or magnetic) is applied to one disc, one axle, or other single unit of the trainset. The subsequent hazard involves overheating, the potential for fire, or damage to equipment. The failed equipment must be isolated by the operator to remove the hazard. All of the high speed trainsets examined in this study exhibit failure modes in this category.

In general the failure modes described for severity category A2 are considered rare failures. The failure modes in severity category A3 could be expected to occur more often than those in category A2, however they are not common failures because they describe conditions that tend to defeat, on a limited basis, the general fail safe design principles of the braking system.

Severity Category B2. This category represents failures that challenge the trainset braking capability, but are recoverable to a safe condition by operator action. Approximately 6% of the failure modes were judged to be in this severity category.

These failure modes represent automatic control system failures such that braking system operation reverts to manual control. The principal difference between this category and severity category A2 is that these failures are anticipated in the system design or alarmed to the operator, thus operations can continue under manual braking control. All of the high speed trainsets examined in this study exhibit failure modes in this category.

Severity Category B3. Failures in this category represent local failures of individual actuators such that a brake is not applied to one disc, one axle, or other single unit of the trainset. Approximately 27% of the failure modes were judged to be in this severity category.

These failures represent a reduction of braking capability; however, they are localized such that the trainset retains sufficient braking capability in the absence of additional failures. These failures do not appear to represent any other hazard. Thus, train operations can continue unimpeded (fault tolerance), although in some cases, the operating rules require speed reductions. All of the high speed trainsets examined in this study exhibit failure modes in this category.

In general, the failure modes described for severity category B2 are considered rare failures; however, the system design recognizes the failure potential. The failure modes in severity category B3 occur more often. In general, these failure modes (category B3) could be anticipated and will generally be recognized during routine inspection and testing of the braking systems.

3.3 BRAKING SYSTEM RESPONSE TO SPECIFIC FAILURE MODES

Table 3-2 lists the braking system response to the following specific failure modes.

- Loss of power - loss of the external power source (catenary).
- Loss of stored energy - includes both air for the pneumatic systems and batteries for electrical systems.
- Train operator incapacitated or oblivious - includes only the operator in the driving cab.

As expected, and as shown in the Table 3-2, all the trainsets exhibit similar responses to these failure modes. These responses generally exhibit the redundant and fail safe design characteristics of the high speed rail brake systems. Loss of power negates or reduces dynamic braking capability; however, the friction brake systems of all trainsets are unaffected by the loss of power and have sufficient capability to stop the train. Loss of stored energy in any of the air brake systems results in the brakes being applied, a fail safe condition. Also, for those trainsets where information was available, the braking control systems result in brake application in the event of operator incapacitation or inattention to the train condition.

TABLE 3-2. HIGH SPEED RAIL BRAKE SYSTEM RESPONSE TO SPECIFIC FAILURE MODES

Trainset	Brake System Response to		
	Loss of Power	Loss of Stored Energy	Train Operator Incapacitated or Oblivious
Amtrak Metroliner (United States)	Dynamic/resistive brake on batteries. Pneumatic disc and tread brakes fully available.	Air: pneumatic brakes applied when main air supply lost. Batteries: no backup power for dynamic brake if catenary fails.	Deadman control.
ICE—InterCity Express (Germany)	Dynamic/regenerative brake is not functional. Pneumatic disc brakes fully available. Magnetic track brakes on batteries.	Air: pneumatic brakes applied when main air supply lost. Batteries: no backup power for magnetic track brakes if catenary fails.	Deadman control results in full service pneumatic brake application.
TGV—Train a Grande Vitesse (France)	Dynamic/resistive brake on batteries. Pneumatic disc and tread brakes fully available.	Air: pneumatic brakes applied when main air supply lost. Batteries: no backup power for dynamic brake if catenary fails.	Deadman control. ATC assesses full stop penalty if speed limit exceeded.
X2000 (Sweden)	Dynamic/regenerative brake is not functional. Pneumatic disc brakes fully available. Magnetic track brakes on batteries.	Air: pneumatic brakes applied when main air supply lost. Batteries: no power for magnetic track brakes.	Vigilance system requires operator response once per minute or full stop penalty. ATC assesses full stop penalty if speed limit exceeded.
Intercity 225 (Great Britain)	Dynamic/resistive brake on batteries. Pneumatic disc and tread brakes fully available.	Air: pneumatic brakes applied when main air supply lost. Batteries: no backup power for dynamic brake if catenary fails.	Vigilance system vents air brake pipe if operator fails to respond once per minute.

TABLE 3-2. HIGH SPEED RAIL BRAKE SYSTEM RESPONSE TO SPECIFIC FAILURE MODES (cont.)

Trainset	Brake System Response to		
	Loss of Power	Loss of Stored Energy	Train Operator Incapacitated or Oblivious
Shinkansen 200 (Japan)	Dynamic/resistive brake on batteries. Pneumatic disc and tread brakes fully available.	Air: pneumatic brakes applied when main air supply lost. Batteries: no backup power for dynamic brake if catenary fails.	Information not available.
Shinkansen 300 (Japan)	Dynamic/regenerative brake is not functional. Pneumatic disc brakes fully available. Eddy current brakes on batteries.	Air: pneumatic brakes applied when main air supply lost. Batteries: no power for eddy current brakes.	Information not available.
ETR450 (Italy)	Dynamic/resistive brake on batteries. Pneumatic disc and tread brakes fully available.	Air: pneumatic brakes applied when main air supply lost. Batteries: no backup power for dynamic brake if catenary fails.	Information not available.

3.4 SUMMARY

The safety analysis of high speed rail braking systems revealed few differences in the functional response of the braking systems to component failures. The dynamic braking systems show the only real difference—regenerative systems (ICE, X2000, and Shinkansen 300) are totally lost upon catenary failure while the resistive systems can continue to provide braking using on-board batteries.

Alternative brake systems such as magnetic track brakes and eddy current brakes (ICE, X2000, and Shinkansen 300) are currently used only in emergency braking situations.* These systems appear only on those trainsets that have a dynamic/regenerative brake in order to provide additional braking capacity in the event of catenary failure.

All the trainsets contain air brake systems that are essentially fail safe when considering failures that might effect the entire air brake system. These systems also include redundant and diverse actuation systems.

*DB hopes to implement eddy current brakes on the ICE to replace magnetic track brakes and to use them in service braking to reduce disc wear.

4. GENERAL DESCRIPTION OF MAGNETIC LEVITATION (MAGLEV) TRANSPORTATION SYSTEMS

Three magnetic levitation transportation systems were considered in this study. These systems include:

- Transrapid TR07 (Germany)
- HSST—High Speed Surface Transport (Japan)
- MLU002N—Linear Motor Car Maglev (Japan)

These three systems represent the maglev trainsets that are currently being tested throughout the world. Currently, none of these trainsets are in revenue service. Each of these systems, and specifically the braking systems, are described in the following sections.*

4.1 TRANSRAPID TR07 (GERMANY)

4.1.1 Trainset Description

The Transrapid TR07 maglev system is an electromagnetically-levitated transportation system designed for cruising speeds of 400 to 500 km/h (250 to 312 mph). It is being developed by a consortium of German companies with funding from the German Ministry of Research & Technology (BMFT). Testing of various Transrapid (06/07) system operational aspects has been underway at the Emsland Test Track (TVE) in Germany since 1985. To date, there are no revenue service applications of the system.

The TR07 "train" consists of individual cars or vehicle sections, each having a length of 25.5 m, a width of 3.7 m, a height of 3.95 m, and a payload capability of 8 t (metric tons) or approximately 100 passengers. Multiple car trains can be configured for bidirectional operation with an operator's control station at each end.

The primary vehicle suspension system is based upon a "wrap around" design in which each vehicle section effectively encloses and captures the T-shaped guideway. Axial flux support magnets, mounted on the vehicle's undercarriage and powered by DC storage batteries, are oriented to produce the necessary vertical attractive force (to the laminated steel stator packs) for levitating the vehicle. An air gap of approximately 8 mm to 10 mm is maintained between the vehicle and the under side of the guideway. The secondary suspension system consists of pneumatic springs mounted between the coach body and levitation frame.

Guidance is provided by separate transverse flux electromagnets (also on the vehicle's undercarriage and powered by the same on-board storage batteries) which produce a lateral attractive force to non-laminated ferromagnetic rails on the side of the guideway structure.

*The order of presentation is arbitrary and is not intended to infer a priority order for the various trainsets.

Propulsion is provided by a long stator iron core linear synchronous motor, with the three phase windings mounted in a laminated stator under both sides of the guideway structure. The traveling magnetic wave in the stator reacts with the axial flux levitation magnets on the vehicle (acting as the rotor portion of the motor) thereby producing an attractive force for propelling the vehicle. Long stator motor sections (portions of the guideway) are energized as the vehicle approaches a given guideway section and de-energized as the vehicle leaves the section.

4.1.2 Brake System Description

The braking strategy of the TR07 is based upon the following key aspects.

- Normal dynamic braking via the long stator motor, controlled by wayside equipment.

- Emergency braking via an on-board eddy current braking system in conjunction with skids mounted on the vehicle's undercarriage; the latter involves deactivation of the levitation function; such braking is controlled by on-board equipment; (Note: the long stator motor is the primary emergency braking system if it is operational).

- Existence of safe stopping areas (specific locations along the guideway where the vehicle is permitted to come to a stop); this requires maintaining levitation and precisely controlling eddy current braking if guideway power is lost.

- Communications via a radio link between safety critical wayside and on-board equipment to determine and/or indicate that emergency braking is needed.

The three major braking components of the TR07 are described below.

Dynamic Brake. The linear synchronous motor provides propulsion as well as braking for the TR07. Substations convert 3-phase utility power into variable voltage, variable frequency (VVVF) power for the long stator sections in the guideway. Power is fed to the long stator sections via transformers, rectifiers, inverters and feeder cables. In the propulsion mode, the 3-phase AC currents in the long stator sections create an attractive force with the battery-powered levitation magnets on-board the vehicle, thereby essentially pulling the vehicle down the guideway.

Dynamic braking is accomplished via wayside/central equipment by reversing the polarity of the magnetic fields in the long stator windings. Since, in this mode, the long stator motor acts as a generator, electrical energy is fed back to the substation where it is dissipated in resistor networks.

Eddy Current Brakes. Each vehicle section is equipped with a non-contact eddy current brake system which consists of four brake circuits and two 16-pole longitudinal axial flux magnets (one located on each side of the vehicle). Each longitudinal magnet is divided into four magnet groups, and each brake circuit controls two magnet groups--one on each side of the vehicle. More specifically, each of two choppers within a brake circuit controls one magnet group.

The four brake circuits are powered by separate and independent 440 volt on-board storage batteries. These batteries receive their charging power from on-board linear generators which, in turn, receive their power from the long stator motor in the guideway as long as the long stator sections are operational and the vehicle is moving. Charging starts at 60 km/hr and is at full capacity once 120 km/hr is reached.

The braking force generated by the eddy currents is dependent upon the air gap, the velocity of the vehicle, and the braking current fed to the magnet groups. The braking force in the direction of travel for a given air gap and brake current stays relatively constant from higher speeds down to about 100 to 120 km/h, at which point the force decreases rapidly. Thus, eddy current braking loses its effectiveness as speed decreases below 100 to 120 km/h. This is the reason for the incorporation of brake skids. In emergency braking operations (controlled by on-board equipment), the eddy current brake is used in conjunction with the brake skids to provide the necessary braking. A modification to make the eddy current brakes effective down to 10 km/hr is planned for future revenue service.

Brake Skids. Braking (support) skids, positioned on the lower portions of the vehicle sections (just above the guideway surface), are used in emergency braking operations. They come in contact with slightly elevated and parallel gliding surfaces on the guideway structure when levitation is removed during the emergency braking process. There are 16 brake skids per vehicle section and 32 skids for a two-car train, two for each hinge point on the vehicle. Each skid, covered with a special material, actually consists of two parallel "bars" (one located on each side of the vehicle), running longitudinally with respect to the direction of travel.

Braking Control Components. The portion of the TR07 system that is responsible for the safety, control and supervision of vehicle operations (including braking) is referred to as the Operations Control System (OCS). The system is comprised of on-board, wayside and central elements, each of which performs various train control and braking functions (primarily the former two elements).

Wayside OCS. The wayside elements assign power inverters to the vehicles and determine the propulsion and braking values required to achieve given speed profiles and/or to comply with specific operating conditions (e.g., position of preceding vehicles, position of switches, occupancy of nearby stations, and the location of the next station). These values are then transmitted to the appropriate guideway long stator sections to control propulsion/braking accordingly. In order to perform these functions, the wayside equipment receives safety critical vehicle location, speed and direction information from the vehicles in its governing area via radio links. It also receives safety critical route integrity information (e.g., location of other vehicles, position of switches) and information regarding status of vehicles in stations

from other nearby wayside elements. A given wayside element can initiate dynamic braking via the long stator motor sections or can indicate to a given vehicle that emergency braking must be initiated on-board. The latter requires removal of propulsion power from the guideway. The computer-based wayside elements performing these propulsion/braking control functions are implemented with two sets of computers (for availability) arranged in a triple channel computer configuration (for safety).

Vehicle OCS. The vehicle portion of the OCS with primary responsibility for controlling the on-board eddy current brakes and levitation magnets (for set-down when landing on the brake skids) is referred to as the vehicle operation control system. It continuously monitors vehicle location, speed, direction, location of the next safe stopping area and status of certain vehicle equipment, and receives other information from the wayside elements (e.g., status of linear synchronous motor) so as to permit stopping the vehicle at the next safe stopping location independent of the wayside propulsion/braking equipment. This is especially necessary in case of loss of communications with the wayside elements.

Information regarding the status of certain vehicle equipment (e.g., status of on-board storage batteries or location determination equipment) is transferred to the wayside elements as appropriate via the radio links. This is necessary because certain abnormal conditions of on-board equipment require removal of propulsion power and/or braking via the wayside long stator motor.

The on-board equipment is configured in a similar manner as the wayside computer equipment—two sets of computers (for availability) arranged in a triple channel configuration (for safety).

Emergency Stop Key Switch. There is an emergency stop key switch on the vehicle console which, when activated, permits the operator to bring the vehicle to an emergency stop. Activating the switch activates the eddy current braking system via the brake circuits, which leads to a rescinding of the levitation command (when the proper set-down speed is reached), and signals the wayside equipment (via the radio link) to remove propulsion from the long stator sections in the guideway. The resulting braking is of the immediate type--the vehicle is stopped at a random location on the guideway. It should be emphasized, however, that levitation is maintained until the proper set-down speed of approximately 120 km/h is reached. For revenue service in Germany, such a stop switch may be modified to only allow stopping at the next "safe stopping area."

4.2 HSST—HIGH SPEED SURFACE TRANSPORT (JAPAN)

4.2.1 Trainset Description

The High Speed Surface Transport (HSST) maglev system has been under development and through various phases of testing since the 1970's. Initial designs (i.e., HSST-01) were created by Japan Air Lines (JAL) in 1975. Since then, the system has evolved under leadership of the HSST Corporation through the HSST-02, -03, -04, and -05. The HSST-05 was the first two-car train in the series, and was designed for a maximum speed of 55 km/h.

Various evaluation tests have since been conducted at a test track in Nagoya City, Japan. In 1993, the HSST Development Corporation was formed to market HSST technology worldwide, and in particular, the sixth generation system referred to as the HSST-100. This system is very similar to the HSST-05, and is designed for a cruising speed of 110 km/h (with a maximum speed of 200 km/h).

The HSST-05 "train" consists of two cars, each of which has a length, width, and height of approximately 18 m, 3 m, and 3.6 m, respectively. Each car can carry about 80 passengers.

The design is quite similar in some respects to the German Transrapid system in that the vehicle wraps around a T-shaped guideway and uses attractive levitation based upon on-board magnets and steel rails in the guideway. One major difference, however, is that the HSST propulsion (and primary braking) system is based upon a short stator linear induction motor concept in which the motor primary is on the vehicle and a reaction plate in the guideway acts as the motor secondary or rotor. Electrical power for propulsion/braking is supplied to the vehicle from the wayside via power collectors.

Primary suspension is provided by the on-board magnets which are used to maintain an air gap of approximately 9 mm (8 mm in the HSST-100). Each vehicle has 8 suspension modules (3 modules for the HSST-100), which are connected to the vehicle body through a secondary suspension system comprised of air springs (4 springs per module). Each module contains four levitation magnets and one linear motor primary.

4.2.2 Brake System Description

It should be noted that the braking system description provided herein focuses on the HSST-05 since most available technical information applies to this version. Key differences between the HSST-05 and -100 versions are cited where known. However, it is believed that the basic braking philosophy and key components of the two systems are very similar in nature.

The braking strategy of the HSST-05 is based upon the following key aspects:

- Dynamic/regenerative braking under normal circumstances via the on-board short stator linear induction motor
- A hydraulic/friction braking system to supplement and/or replace dynamic braking, and
- Skids on the vehicle for use as a parking brake and, in some instances, for emergency braking in case of loss of levitation.

Dynamic Brake. The linear induction motor (LIM) is used for normal braking as well as propulsion. In the propulsion mode, three-phase variable voltage, variable frequency (VVVF) power is provided to the primary side of the motor on-board the vehicle (one LIM per each suspension module). Voltage (i.e., 1500 volts DC) is transferred to the vehicle via power

collectors, located below the suspension modules. The magnetic flux generated by the AC current in the primary induces a current flow in the guideway-mounted reaction plates (two steel plates running in parallel with and on the guideway surface). This induced current, resulting magnetic flux and interaction with the primary-generated magnetic flux generates propulsion.

In the braking mode, the phase of the AC current in the primary winding on-board the vehicle is reversed, causing an interaction between the magnetic fluxes in the primary and secondary windings, thereby generating a retarding force on the vehicle. Power induced back into the primary winding as a result of the braking action is returned to the wayside via the power collectors.

Hydraulic Friction Brakes. Each suspension module on a vehicle (eight modules for an HSST-05) is equipped with a hydraulic brake assembly, consisting of two friction caliper brake units (one on each side of the vehicle). Other associated equipment includes a hydraulic fluid source maintained at approximately 3,000 psi, two hydraulic brake control systems, a hydraulic pump control system, and a monitoring/warning system. When braking is commanded, hydraulic fluid is pumped to the brake units, thereby forcing the calipers and brake pads to make contact with an extended portion of the guideway structure.

Brake Skids. Each module on the vehicle is equipped with two brake skid pads, one on each side of the module. Each pad is located on the bottom of the module and parallel to the vehicle such that the pads make contact with the top of the guideway surface when the vehicle is delevitated. These brake pads are used as a parking brake, but also in the event that additional braking is needed in emergency situations beyond the dynamic and hydraulic friction brakes.

Brake Control Components. Braking is usually initiated by wayside equipment, but the primary control function occurs within on-board systems.

Wayside ATP System. Automatic Train Protection (ATP) equipment (some of which is computer based) at various wayside locations receive information from vehicles in its controlling area regarding location and speed. Based upon this and other information such as switch status and movement requests from central control, the wayside equipment sends speed and braking commands to a vehicle in a given block. Commands are sent to the appropriate vehicle(s) via transponders and vehicle-mounted antenna.

On-Board ATP System. Under normal circumstances on-board ATP equipment receives and interprets speed and braking commands from the wayside, determines the type of braking to be provided (i.e., dynamic, hydraulic friction and/or skids) and determines the appropriate level of braking to be achieved by each brake system. Appropriate control signals are sent from the main ATP control equipment to the various braking control subsystems for further processing.

Each module is equipped with a brake control subsystem that receives signals from the main ATP system and interfaces with the VVVF inverters and hydraulic braking system. In this manner, braking can be performed dynamically via the linear induction motors (LIMs) and/or

mechanically via the hydraulic friction brakes. If friction braking is desired, the hydraulic pumps are commanded to provide hydraulic fluid to the caliper brake units which, in turn, force the brake shoes against the guideway. Two separate hydraulic supply systems are utilized to protect against leaks in one or the other hydraulic system.

Levitation Control Unit. Brake skids can be used as a means of braking the vehicle under certain circumstances (e.g., loss or ineffective dynamic and friction braking). The control of these skids is performed by levitation control units (two for each of the eight vehicle modules) which activate the skids by reducing or removing levitation, thereby causing the skids to make contact with the guideway surface. The amount of levitation is detected by dedicated sensors. Each levitation unit controls two of the four magnets on each vehicle module. The levitation control unit is under the control of the main ATP system in the operator's compartment.

Master Control Lever. There is a Master Control Lever on the operator's console for the manual control of propulsion as well as braking. This control lever has a position which can be used by the operator to apply the emergency brakes (i.e., dynamic, friction and/or skids). However, even in the manual position the ATP system monitors vehicle movement for unsafe conditions (e.g., excessive speed or insufficient braking) and commands braking as appropriate.

4.3 MLU002N—LINEAR MOTOR CAR MAGLEV (JAPAN)

4.3.1 Trainset Description

The MLU002N is a Japanese maglev system that is under development and is based upon electrodynamic levitation using superconducting magnets. It is the latest in a series of maglev systems being developed by the Railway Technical Research Institute (RTRI) and funded by the Japanese Ministry of Transport. Original development work for the system was initiated by the Japanese National Railways, but was taken over by the RTRI in 1987. The predecessor to the MLU002N was the MLU002, which was destroyed by fire in 1991.

Speeds of up to 394 km/h were achieved with the MLU002 vehicle at the Miyazaki Test Track before the fire. Testing has been underway since January 1993 at the Miyazuki test track using the MLU002N vehicle in order to assess the economical and technical feasibility of a 500 km/h commercial maglev system. Revenue service operation of the train is not expected to occur until about the year 2005.

The MLU002N is a single-bodied vehicle that is designed to travel in both directions. Its total weight is about 20 tons and has a total length, width and height of 22 m, 3 m, and 3.7 m, respectively. It is expected that future trainsets will consist of 3-car or 5-car units with a car containing an operator's control station on each end and passenger cars in the middle. Up to four different lightweight bodies have been developed for these applications using different materials and construction techniques.

The MLU002N vehicle, which rides in a U-shaped guideway, incorporates repelling superconducting magnets (on the lower sides of the vehicle) which interact with electromagnets on the guideway walls to provide electrodynamic levitation, guidance, propulsion, and electric braking. Propulsion as well as braking is provided through the use of a long stator linear synchronous motor.

One unique characteristic of this electrodynamic system is that it incorporates wheels beneath the vehicle on which the vehicle rides until adequate levitation is achieved—since proper levitation does not occur via the superconducting magnets until an adequate vehicle speed is attained (which induces the proper magnetic forces). Thus, primary suspension of the vehicle is maintained by the wheels (at lower speeds) and the levitation system at higher speeds. A secondary suspension system based upon the use of air springs is also incorporated.

4.3.2 Brake System Description

The braking system design of the MLU002N is based upon the use of electrical and mechanical brakes as well as an aerodynamic brake. These brakes are used under different conditions and in different speed ranges. The specific braking strategy as anticipated for the vehicle is shown below in Table 4-1. It should be noted that the braking systems, and especially the disc brake system, are under development and have not been finalized.

TABLE 4-1. BRAKING STRATEGY OF THE MLU002N

Brake System	Usage	Speed Range
Regenerative Brake (Electric)	Normal Braking Emergency Braking	0-500 km/h
Dynamic Brake (Electric)	Failure of Regenerative Brake Failure of Substation	0-500 km/h
Landing Skid Brake (Mechanical)	Failure of Electric Brakes	0-350 km/h
Disc Brake (Mechanical)	Failure of Electric Brakes	0-500 km/h
Aerodynamic Brake	Failure of Electric Brakes	200-500 km/h

Dynamic Brake. The primary mode of braking for the MLU002N is electric in nature and is provided by the long stator linear synchronous motor (LSM). In a propulsion mode, three-phase current is fed to the guideway-mounted electromagnets which react with the on-board superconducting magnets to produce a propulsive force. A traveling wave in the guideway propels the vehicle via both attractive and repulsive magnetic forces. The guideway-mounted electromagnets act as the armature of the motor, while the superconducting magnets act as the rotor.

Dynamic braking is actually of two types: regenerative and resistive. In regenerative braking, which is the type most often used, the phase of the current in the guideway coils is reversed, thereby inducing a brake force on the vehicle. Electrical power generated by this form of braking is returned to the substation for other usage.

Resistive braking is provided in essentially the same manner, but the generated power is dissipated in a resistor network on the wayside. This mode is used if, for some reason, electrical power cannot be returned to the substation.

Disc Brake. Considerable attention is being directed by the designers of the MLU002N to a disc brake system that could be used as a backup should there be a failure of the electric brake. One problem has been that the downward force on the bogie wheels decreases as vehicle speed increases and levitation force increases because the wheel assemblies are raised and lowered as levitation force increases and decreases. This has resulted in a lower available braking force by the wheel disc brakes at higher speeds. Another problem has involved the development of a disc brake system that could be effective over the entire speed range of 0 to 500 km/h (and especially the higher speeds due to increased temperature generated during braking). At the present time, should electric braking not be available, the disc brake system is utilized at lower speeds and the aerodynamic brake at higher speeds (above 200 km/h or so).

Although details of the current disc brake system are not clearly identified in available literature, it is believed that the system is very similar (if not identical) to a newly developed disc brake system that is described in documentation. It should be noted that documentation indicates this new disc brake system has been successfully tested up to speeds of 500 km/h[9]. The lower levitation forces at the new test track have resulted in sufficient train weight on the bogie wheels at higher speeds to permit sufficient braking force (via the wheel discs) at these higher speeds.

Using this new disc brake system, each bogie of the MLU002N is equipped with four-wheel assemblies, one on each corner below the bogie frame. When braking is commanded by an electronic control unit (ECU), the hydraulic system furnishes fluid at the proper pressure to all disc brakes on the vehicle bogie (two disc brakes for each of the four wheel assemblies) to generate the required braking force.

Aerodynamic Brake. The MLU002N is fitted with two sets of aerodynamic brake devices. Each set consists of two panels mounted on the vehicle top, about 5 m from the end of the vehicle. The panels (in this test vehicle) are oriented in the same direction so that braking via these panels is accomplished as the vehicle travels in only one direction.

The principle of the devices is based upon the proportional relationship between air resistance (for braking) and the front face area of the vehicle and its speed. Under normal operation (no braking) the panels are closed and flush with the vehicle's surface. Should emergency braking is needed (electric brake not operable), the panels are opened to create increased air resistance. The panels are opened to about 45 degrees with the aid of a spring, after which the air resistance itself pulls the panels open even further until they are essentially perpendicular with the vehicle body. The effectiveness of the panels is greatest at higher

speeds and decreases rapidly below about 200 km/h. This is why, at the present time, a combination of aerodynamic and friction braking (via the wheel assemblies) is used for emergency braking purposes.

Landing Skids. Each bogie is equipped with four landing skids, two mounted underneath and on each end of the bogie. The skids are fitted with metal shoes which can be commanded to come in contact with the guideway surface at lower speeds, when the wheel assembly is retracted, and when levitation is removed. Indications are that the skids could be used for braking (if desired) at vehicle speeds below 350 km/h, however, the disc and aerodynamic brakes are preferred at high speeds.

Brake Control Components. The operational safety system for the MLU002N is comprised of both wayside and on-board control elements. One major element on the wayside that is highly involved in brake control is the safety control system which has the following responsibilities:

- Generate maximum speed, route and brake commands (including emergency brake commands) to the wayside running control system (portion of the equipment responsible for sending propulsion and brake commands to the guideway mounted linear synchronous motor coils); electric braking of the vehicle (either regeneratively or dynamically) is controlled in this manner, and

- Generate and transmit brake control signal commands to the train itself; these signals form the high level control for the disc brakes, aerodynamic brakes and landing skids.

Thus, the safety control system generates safe commanded speeds, detects overspeed conditions, and controls propulsion and braking systems both on and off the vehicle.

Disc Brake Control System. The on-board disc brake control system, referred to as the anti-skid, auto-brake control system (ACS), controls application of the disc brakes on the wheel assemblies. It is comprised of an electronic control unit (ECU) and a hydraulic control valve module (HCM). The primary purpose of the ACS is to stop the vehicle within the designated deceleration profile while preventing wheel (tire) skid. The ECU monitors wheel speed of the various wheel assemblies and commands the HCM to apply the appropriate hydraulic pressure to increase and/or decrease braking force on a given wheel. Other functions of the system are to eliminate tire burst (by releasing pressure when skid is detected), to eliminate torque unbalance between the different wheel assemblies, and apply a parking brake when the vehicle is at rest.

Aerodynamic Brake Control Circuits. Four control circuits are used to control the aerodynamic brakes, one circuit for each brake panel. Each control circuit involves two magnet holders and two switches. When power is applied to the magnet holders, the brake panels are closed and locked. When power is removed via a command from the control system, the lock is released and the panels begin opening via a spring-assisted stay damper that helps absorb the shock of opening the panels and serves as a stopper when the panels are

fully open. Panels must be manually closed after use by pulling the stay damper to the closed position.

4.4 SUMMARY COMPARISON OF MAGNETIC LEVITATION BRAKING SYSTEMS

As described in the previous sections, the magnetic levitation trainsets show significant variety in braking system design and operation. The specifics of individual systems vary, particularly with respect to the secondary, or emergency, braking systems designed to supplement the primary dynamic brake. Table 4-2 provides a summary of the braking equipment and some brake system performance factors for the magnetic levitation trainsets reviewed in this study.

TABLE 4-2. SUMMARY OF MAGNETIC LEVITATION TRAINSET BRAKING EQUIPMENT AND PERFORMANCE FACTORS

Trainset	Top Speed	Braking Systems	Test Vehicle Description	Braking Rates	
Transrapid TR07 (Germany)	400 - 500 km/hr (250 - 312 mph)	a. Dynamic/resistive brake b. Eddy current brakes c. Landing skids	Two-vehicle trainset Each vehicle: 25.5 m (83.7 ft) long 3.7 m (12.1 ft) wide 3.95 m (13.0 ft) high Approximately 100 passenger or 8 metric ton payload	Dynamic: Eddy Current: Landing Skids:	not available 3.6-5.0 km/hr/s (2.2-3.1 mph/s) @ 200-400 km/hr (125-250 mph) decreasing to 1.8 km/hr/s (1.1 mph/s) @ 120 km/hr (75 mph) set-down speed 2.0-2.3 km/hr/s (1.2-1.4 mph/s) from 120 km/hr (75 mph) to stop
HSST (Japan)	HSST-05 55 km/hr (35 mph) HSST-100 110 - 200 km/hr (69 - 125 mph)	a. Dynamic/regenerative brake b. Hydraulic friction brake c. Landing skids	Two-vehicle trainset Each vehicle: 18 m (59.1 ft) long 3 m (9.8 ft) wide 3.6 m (11.8 ft) high Approximately 80 passenger payload	HSST-05: HSST-100:	2.5 km/hr/s (1.6 mph/s) 2.5 km/hr/s (1.6 mph/s) normal service 3.5 km/hr/s (2.2 mph/s) emergency

TABLE 4-2. SUMMARY OF MAGNETIC LEVITATION TRAINSET BRAKING EQUIPMENT AND PERFORMANCE FACTORS (cont.)

Trainset	Top Speed	Braking Systems	Test Vehicle Description	Braking Rates	
Transrapid TR07 (Germany)	400 - 500 km/hr (250 - 312 mph)	a. Dynamic/resistive brake b. Eddy current brakes c. Landing skids	Two-vehicle trainset Each vehicle: 25.5 m (83.7 ft) long 3.7 m (12.1 ft) wide 3.95 m (13.0 ft) high Approximately 100 passenger or 8 metric ton payload	Dynamic: Eddy Current: Landing Skids:	not available 3.6-5.0 km/hr/s (2.2-3.1 mph/s) @ 200-400 km/hr (125-250 mph) decreasing to 1.8 km/hr/s (1.1 mph/s) @ 120 km/hr (75 mph) set-down speed 2.0-2.3 km/hr/s (1.2-1.4 mph/s) from 120 km/hr (75 mph) to stop
MLU002N (Japan)	394 - 500 km/hr (246 - 312 mph)	a. Dynamic/regenerative brake (resistive if regenerative fails) b. Hydraulic disc brake c. Aerodynamic brake d. Landing skids	Single-bodied vehicle 22 m (72.2 ft) long 3 m (9.8 ft) wide 3.7 m (12.1 ft) high	Dynamic: Aerodynamic: Hydraulic Disc: Landing Skids:	not available 5.3 km/hr/s (3.3 mph/s) with 2 panels deployed @420 km/hr (261 mph) 21.2 km/hr/s (13.2 mph/s) @ 550 km/hr (342 mph) (maximum achieved in dynamometer tests) 7.1 km/hr/s (4.4 mph/s) expected normal service not available

5. SYSTEM SAFETY ANALYSIS OF MAGNETIC LEVITATION (MAGLEV) TRANSPORTATION SYSTEMS

The system safety analysis of the magnetic levitation braking systems is a high-level examination of system failure modes to identify the inherent protection included in the system designs. Detailed information about some equipment and failure modes was not available since the magnetic levitation trainsets examined in this study are essentially experimental or in various stages of development. In general, the failure modes for each trainset are established at a subsystem level for two reasons. First, this level of detail is sufficient for the purposes of this study and second, the available information is insufficient to allow a more detailed examination.

As an example, a braking control system may be considered as a single unit with failure modes described as "fails such that too little braking is commanded" or "fails such that too much braking is commanded." A detailed evaluation of the control system would be required to establish the specific conditions that would lead to these control system failures (or even if those failure modes are possible in some cases). However, examining the system's response to this postulated failure mode can identify the inherent protection (or lack of inherent protection) for the failure mode. This type of result is believed adequate for the purposes of establishing regulatory priorities.

5.1 SIGNIFICANCE OF FAILURE MODES

The significance of the failure modes identified for the magnetic levitation trainsets is judged in the same manner as for the high speed rail trainsets (Section 3.1). First, each failure mode was judged to be fault tolerant or fail safe, according to the working definitions presented in Section 3.1. Second, if a failure mode was judged to be not fail safe, the failure mode was examined to determine the severity of the failure mode according to the same severity code as described for the high speed rail trainsets. These two factors determine the importance of the failure mode in the safety analysis results.

5.2 RESULTS

This section provides a summary of the results of the failure modes and effects analyses of the magnetic levitation braking systems for each of the severity categories. The detailed worksheets for the failure modes and effects analyses for the braking systems are provided in a separate, limited distribution report.

The failure modes analysis resulted in approximately 60 total failure mode definitions for the maglev braking systems, or approximately 20 failure modes for each braking system. The overall distribution of the failure modes versus their severity is as follows.

Severity	Percentage of Failure Modes
A1	0%
A2	2%
A3	12%
B1	0%
B2	0%
B3	23%
C	45%
D	18%

This distribution indicates that only 14% of the failure modes were considered to be both not fault tolerant and not fail safe (severities A1, A2, A3). About 23% of the failure modes were judged to be fault tolerant but not fail safe (severities B1, B2, B3). The remainder of the failure modes, approximately 63%, were judged to be fail safe. This distribution of failure modes versus severity is reasonably consistent for all the maglev trainsets examined in this study. The following paragraphs provide general descriptions of the failure modes that were judged to be not fail safe.

Severity Categories A1 and B1. These categories represent failures modes that result in loss of train-wide braking capability with no means of recovery. No failure modes were identified in this category for any of the trainsets considered in this study.

Severity Category A2. This category includes failures that represent a subsequent hazard to the trainset braking capability, but is recoverable to a safe condition by operator action. Only one failure mode related to the HSST (Japan) was identified in this category, failure of the dynamic/regenerative brake. The operator would retain control of the hydraulic friction brake (if wayside power is available) and the levitation function. If wayside power is unavailable, braking is accomplished by allowing the vehicle to coast to a stop or reducing levitation and using the landing skids.

The TR07 and MLU002N maglev concepts have much broader wayside and on-board automatic control of train functions and thus appear to be less reliant on operator action to recover from failure in the brake systems.

Severity Category A3. Failures in this category represent local failures that represent a subsequent hazard if the train continues to operate. Approximately 12% of the failure modes were judged to be in this severity category.

All the maglev trains share one failure mode that exists in this category. Excessive wear or damage to the landing skids could result in reduced stopping power as well as possible damage to the undercarriage of the vehicles. Problems with levitation control, irregularities in the guideway structure, or poor maintenance inspections could all contribute to this failure mode.

The MLU002N has additional failure modes that are assigned to this category. Two failure modes are associated with the aerodynamic brake. The panels could be damaged if the stay damper fails to damp the opening forces, possibly reducing braking power. Also, brake power would be reduced if the panels fail to lock in a fully deployed position. Brake forces from the hydraulic disc brakes would be reduced if a wheel assembly fails to deploy properly.

Severity Category B2. This category represents failures that challenge the trainset braking capability, but are recoverable to a safe condition by operator action. No failure modes were identified for this category. In general, the maglev concepts have much broader wayside and on-board automatic control of train functions and thus appear to be less reliant on operator action to recover from failure in the brake systems.

Severity Category B3. Failures in this category represent local failures of individual actuators such that a portion of the brake system is not applied. Approximately 23% of the failure modes were judged to be in this severity category.

These failure modes include a single guideway section (TR07 and MLU002N) or a single LIM (HSST) failing to reverse polarity to the braking mode or failing off thus providing no braking or propulsion. These failure modes result in some reduction of brake power but with no expected damage to the vehicle or guideway.

The TR07 may experience failure on one or more eddy current brake circuits, magnets, storage batteries, or linear generators, resulting in reduced eddy current brake power. The current operational concept requires bringing the vehicle to a stop if two or more eddy current brake circuits fail.

The HSST could experience failures in the hydraulic friction brakes, including calipers failing in an open position, loss of pressure in one of the hydraulic supplies, or failure in one of the hydraulic control systems. These failures result in reduced hydraulic friction brake power, however this system is generally intended for use only after the vehicle has slowed to 8 km/hr (5 mph).

The MLU002N aerodynamic brake may fail to deploy due to locking device or control circuit failures, reducing the available brake power. The hydraulic disc brakes, based on the limited information available, could be lost on one bogie through a loss of hydraulic pressure or control system failures. The hydraulic disc brake system is apparently still under development, thus the capability loss may not encompass an entire bogie as assumed here.

5.3 BRAKING SYSTEM RESPONSE TO SPECIFIC FAILURE MODES

Table 5-1 lists the magnetic levitation brake system response to selected failure modes, including loss of wayside power, loss of stored energy, and train operator incapacitation. While detailed information was lacking in some cases, the three maglev trainsets appear to respond in a similar manner according to the available information.

TABLE 5-1. MAGNETIC LEVITATION BRAKE SYSTEM RESPONSE TO SPECIFIC FAILURE MODES

Trainset	Brake System Response to		
	Loss of Power	Loss of Stored Energy	Train Operator Incapacitated or Oblivious
Transrapid TR07 (Germany)	Loss of dynamic braking, propulsion, and wayside control and communications. Levitation function, eddy current brakes, and on-board control maintained by on-board batteries. On-board control should use last location (broadcast by wayside control) to stop vehicle at the next safe stopping point.	Batteries: On-board batteries provide power for the levitation function, eddy current brake, and on-board control. There are eight separate and independent batteries for the eddy current brake and batteries for the levitation function, all continuously recharged by on-board linear generators. Total loss of on-board power (batteries and generators) would result in the loss of both the levitation function and eddy current brake. This is a very unlikely failure, and operating rules require braking the train if two of the eddy current brake circuits are inoperative.	No specific information available, however the operating concept includes both wayside and on-board automatic brake control.
HSST (Japan)	Loss of dynamic braking, propulsion, and hydraulic friction brake. Levitation function and on-board control maintained by on-board batteries. Vehicle may coast to stop or set down on landing skids.	Batteries: On-board batteries provide backup power for the levitation function and on-board control. Total loss of on-board batteries would result in loss of the levitation function and on-board control in the event wayside power fails.	A deadman control is indicated, but no specific operational information is available. Wayside ATP can command braking if overspeed condition exists.

TABLE 5-1. MAGNETIC LEVITATION BRAKE SYSTEM RESPONSE TO SPECIFIC FAILURE MODES (cont.)

Trainset	Brake System Response to		
	Loss of Power	Loss of Stored Energy	Train Operator Incapacitated or Oblivious
MLU002N (Japan)	Loss of dynamic braking and propulsion. Aerodynamic brake deploys on loss of power. (Note: Current information is not clear on the status of the experimental, hydraulic disc brake upon loss of power.)	No information was found describing backup power systems for this vehicle.	No specific information available, however the operating concept includes both wayside and on-board automatic brake control.

Loss of power in a maglev system results in the loss of the principal braking method, dynamic braking, and loss of propulsion for the maglev trainset. Both the TR07 and the MLU002N have additional braking systems that can bring the trainset to a controlled stop without the benefit of wayside power. The HSST is an exception, however, because loss of wayside power also affects the hydraulic friction brake. On-board power is provided to maintain and control the levitation function so that the vehicle can coast to a stop or the operator can bring the vehicle to a stop by using the landing skids.

On-board stored energy for the maglev systems generally consists of multiple power systems consisting of generators and storage batteries. Failures of individual power supplies would result in reduced capabilities, however multiple failures are required to result in complete loss of on-board power supply. There was no failure identified for the maglev systems that is analogous to the loss of air supply in a high speed rail pneumatic brake system.

The least information available related to train operator incapacitation. The maglev operating concepts include both wayside and on-board automatic brake control, apparently resulting in less reliance on the operator as a source of recovery from system failures.

5.4 SUMMARY

The safety analysis of maglev braking systems revealed a variety of techniques used to supplement the dynamic brake or provide redundant brake capability. Other than the landing skids, there is no duplication among the secondary brake systems of the three maglev operating concepts. While two of the systems rely on hydraulic actuation, one uses a caliper on an extended portion of the guideway while the other is a more common disc brake within a wheel assembly.

Overall, the analysis revealed no catastrophic failure modes related to the brake systems and, in most cases, few instances where operator intervention was needed to recover from a failure. The maglev system operating concepts exhibit much broader wayside and on-board automatic control of train functions and thus appear to be less reliant on operator action to recover from failure in the brake systems.

6. RECOMMENDED SAFETY REQUIREMENTS

A principal purpose of this review of advanced braking systems is to define recommended revisions to current Federal regulations suitable for HSGGT advanced braking concepts. Existing regulations are found in 49 CFR Part 232. The recommended revisions are based on the results of the review of system designs and safety analyses discussed in the preceding sections of this report. The following sections present a brief review of the existing regulations as well as the recommendations for revisions.

6.1 EXISTING REQUIREMENTS (49 CFR 232)

Current federal regulations for railroad braking systems are set forth in 49 CFR Part 232, *Railroad Power Brakes and Drawbars*. In these regulations, railroad is defined to include "...all forms of non-highway ground transportation that run on rails or electromagnetic guideways, including (1) commuter or other short-haul rail passenger service...and (2) high speed ground transportation systems...without regard to whether they use new technologies not associated with traditional railroads. (§ 232.0)"

Although § 232.0 clearly includes HSGGT systems, 49 CFR 232 generally addresses only air brake systems for standard gage railroads, which are relatively low-speed systems in current U.S. practice. These regulations define minimum performance requirements for air brake systems on both freight and passenger trains.* Specific requirements are included for initial and intermediate terminal road tests, running tests, inbound brake equipment inspections, and brake repair and post-repair testing. Appendix B to Part 232 provides specifications and requirements for the general design of the power brake systems for freight service and mandates performance parameters for both service and emergency requirements. Table 6-1 lists the Table of Contents for 49 CFR 232.

In general, 49 CFR 232 is silent on braking systems other than conventional air brake systems currently in use on relatively low-speed standard guage railroads. For example, U.S. experience with dynamic braking systems, principally on rapid transit vehicles, is not addressed.** However, the FRA has proposed revisions to 49 CFR Part 232 to address the needs of contemporary railroad operations and to facilitate the introduction of advanced technologies.***

---

*49 CFR 232 also prescribes civil penalties for noncompliance and sets standards for drawbar height.

**Rapid transit systems that are not connected with the general railroad system are specifically excluded from the requirements of these regulations.

***The Notice of Proposed Rule Making (NPRM) was published in the Federal Register on September 16, 1994.

TABLE 6-1. TABLE OF CONTENTS, 49 CFR PART 232 - RAILROAD POWER BRAKES AND DRAWBARS

Section	Title
§ 232.0	Applicability and penalties.
§ 232.1	Power brakes; minimum percentage.
§ 232.2	Drawbars; standard height.
§ 232.3	Power brakes and appliances for operating power-brake systems.
Rules for Inspection, Testing and Maintenance of Air Brake Equipment.	
§ 232.10	General rules; locomotives.
§ 232.11	Train air brake system tests.
§ 232.12	Initial terminal road train air brake tests.
§ 232.13	Road train and intermediate terminal train air brake tests.
§ 232.14	Inbound brake equipment inspections.
§ 232.15	Double heading and helper service.
§ 232.16	Running tests.
§ 232.17	Freight and passenger train car brakes.
§ 232.19	End of train device.
Appendix A	Schedule of Civil Penalties
Appendix B	Specifications and Requirements for Power Brakes and Appliances for Operating Power-Brake Systems for Freight Service

6.2 RECOMMENDED SAFETY REQUIREMENTS

The recommended requirements are based primarily on review of foreign experience in both high speed rail and maglev systems. This review of foreign experience provided many insights into HSGGT braking systems and many factors that future U.S. regulations must address. However, future U.S. applications may not mirror foreign experience for a number of reasons, including

- Foreign experience is largely electric motive power—U.S. applications may rely on diesel motive power or a combination of diesel and electric.

- Many of the foreign HSGGT systems operate on dedicated guideways with automatic wayside control systems—U.S. applications may incorporate existing guideways with mixed traffic and varying degrees of wayside control.

- All HSGGT systems are designed and operated with two or more braking methods as part of the overall braking strategy. Some methods, such as the magnetic track brake and the eddy current brake, may not experience wide application in the U.S.

In addition, several issues related to train control and braking are generic because they have no dependence on the technology used to achieve the braking strategy. In many ways, these issues simply relate to good practice from both an operational and regulatory perspective. These issues also relate to functional requirements that define the fault tolerant and fail safe nature of the braking system design.

These recommended revisions to existing regulations, as much as possible, are written to be independent of the technology used to accomplish the braking task and the issues described above. They also do not distinguish between HSGGT technologies in describing requirements for the braking task. As such, the following recommendations represent a set of guidelines intended to ensure safe stopping and speed control for HSGGT systems, including guidance on design, construction, inspection, test, and maintenance of whatever technology is used to accomplish the braking mission.

- ***The brake strategy employed must be capable of safely stopping within the limits imposed by the train control system and anticipated headways.***

This recommendation addresses the basic capability needs of the brake strategy. Current U.S. regulations require 100% of the train power brakes to be functional at an initial terminal and no less than 85% functional at intermediate points en route. A single fixed limit may not yield consistent results in terms of braking capability when considering a variety of brake strategies employing multiple braking methods.

Safe stopping distances, requirements for speed limitations, and braking capability needs are defined by the environment where the trainset operates. For example, a new, dedicated guideway with automatic wayside control may employ different operating limits than operations over an existing guideway with mixed traffic. Rather than specify stopping distances or other equipment requirements, this recommendation suggests that safe braking conditions be defined by operational constraints rather than by arbitrary limits for all operating environments.

- ***No single component or control system failure should result in the brake strategy having insufficient capability to satisfy safe braking conditions.***

This recommendation addresses fault tolerance at a high level. Since component and control system failures will occur from time to time, the brake strategy should be designed such that a single failure does not result in a catastrophic loss of capability. All of the high speed rail and maglev systems examined in this review currently comply with this single failure rule. This recommendation also relates its requirement to safe braking conditions which would be defined by operational constraints.

- ***The brake strategy employed must retain the capability for safe stopping conditions and bring the trainset to a safe stop in the event of (a) loss of wayside or central control and communication, (b) loss of on-board brake control and diagnostic information, (c) loss of stored energy or fluids that are part of the brake strategy, (d) loss of motive power, and (e) train operator incapacitation.***

This recommendation addresses fail safety at a high level. The brake strategy design should retain capability for safe stopping conditions in the absence of normal control inputs or normal motive power. While the recommendation contains a requirement to bring the trainset to a safe stop, this may be overly restrictive for some of the stated conditions, depending on the constraints of the operating environment.

- ***Operating rules should be established that define the maximum number and type of failures in the brake strategy (a) permitting continued operations with no restrictions, (b) permitting continued operations with speed restrictions, or (c) requiring termination of operations, all based on brake strategy capability to meet safe stopping conditions with the specified failure conditions.***

This recommendation addresses permissible continued operations with reduced brake strategy capability under predefined failure conditions. The predefined failure conditions represent fault tolerant failures that do not represent a subsequent hazard to trainset operations; however, some braking capability is lost. This recommendation suggests that these capability limits be established based on the constraints of the operating environment, with appropriate safety margins, rather than an arbitrary limit of brake capability. Thus, the operating rules derived under this procedure could be different depending on the type of trainset involved and the guideway being considered. All of the high speed rail and maglev systems reviewed in this study permit continued operation under predefined failure conditions; however, it is not clear that these predefined conditions are based on the operating environment.

- ***Brake systems requiring electrical power for brake application (for example, dynamic brake, magnetic track brake, eddy current brake) should have a redundant source of power that operates independent of wayside and motive power sources.***

This recommendation addresses redundancy and fail safety for individual braking systems that require a source of power. Requiring an independent source of power (such as batteries) helps ensure that braking capability is maintained when the normal power sources are lost. This approach supports a previous recommendation that suggests a safe stop as the result of a loss of wayside or motive power.

- ***Component failures that might endanger train operations or passengers through subsequent hazards should be annunciated to the train operator and/or subject to verifiable inspections on a routine basis.***

This recommendation addresses a level of protection for component failures that are not fault tolerant and result in a subsequent hazard to trainset operations. These failures may be identified through modern, on-board diagnostics that alert the operator to the hazardous condition. This would be particularly important for a failure that manifests a hazardous condition in a relatively short time. If the lead time to the hazardous condition is less severe, an alternate approach would be a verifiable inspection of the component on a routine basis. Verifiable is intended to mean a directed inspection, such as by a checklist or work order, supported by a required sign-off by a qualified individual once the inspection is complete.

- ***Adequate brake capability should be provided over the entire operational speed range of the trainset.***

This recommendation addresses the need to ensure adequate braking capability over the entire operating speed range. An HSGGT system designed to routinely operate in excess of 200 km/hr (125 mph) will also spend a substantial amount of operating time at lesser speeds. Both dynamic brakes and aerodynamic brakes are examples of braking methods that are most effective at high speeds and lose effectiveness at lower speeds.

- ***Brake systems should not interfere with train control and signalling systems or other vital wayside communications, or cause undue damage to the trainset equipment or guideway.***

This recommendation addresses possible side effects of introducing alternative braking technologies into existing guideways. While the brake systems reviewed in this study are apparently causing no ill effects within their guideways, test data indicated that older guideway equipment may experience some electromagnetic interference problems from eddy current brakes. Also, rail damage from repeated use of magnetic track brakes and rail heating associated with frequent use of eddy current brakes are other side effects that should be considered. This recommendation is intended to emphasize the need to ensure compatibility with the operating environment when introducing new technology, and should not be interpreted to disallow any viable HSGGT braking technology.

- ***Brake systems required for emergency brake service should be capable of being activated independently of the normal braking control.***

This recommendation addresses the principle of separation of protection and control. Control and activation of systems essential to emergency braking capability should be available outside the normal brake control, since failure of normal brake control creates a situation where emergency brake control is required. All of the high speed rail and maglev systems reviewed in this study exhibit direct access to emergency braking.

- ***Brake system equipment and control systems should be tested, inspected, and maintained on a regular basis to ensure the reliability of the brake system.***

This recommendation addresses minimum requirements for upkeep of the braking system and controls. The current rules (49 CFR Part 232) provide extensive rules for inspection, test, and maintenance of air brake equipment. Other types of brake systems, equipment, and control systems should also be subjected to inspection, test, and maintenance on a schedule suitable for each system or equipment type. Ultimately, the system operator is responsible for ensuring that maintenance rules, operating rules, annunciation and allowable failures are systematically integrated.

APPENDIX A – REFERENCES

1. Max Ephraim, Jr., "The AEM-7 - A New High Speed, Light Weight Electric Passenger Locomotive," ASME Paper 82-RT-7, April 1982.

2. K.G. Ellsworth, Ed., "The Car and Locomotive Cyclopedia of American Practices," 1984 edition, Simmons-Boardman.

3. R. Nilsson, "X2000 U.S. Demonstration Project -- Summary of Test Results," ABB Traction Inc. memo dated Sept. 21, 1993.

4. Knorr-Bremse AG, "Brakes: Abridged Description for ICE/USA," Ref: TA 19691/43 (from Siemens Transportation Systems, Inc.), 14 May 1993.

5. Klaus Becker-Lindhorst, "The ICE brake equipment," ICE High-tech on Rails, Hestra Vertag (1990), pp 80-85.

6. A. Tayler, *Hi-Tech Trains*, Quinset Publishing Ltd., 1992, pp 10-21.

7. Japanese Railway Information, "Railway Systems and Components," No. 8, December 1980.

8. Japanese Railway Information, "Railway Systems and Components," No. 54, October 1992.

9. Takizawa, H. and Hamada, K., "The Development of Disk Brake System for Maglev Train," RTRI, Sumitomo Precision Products, Japan, Proceedings of the International Conference on Speedup Technology for Railway and Maglev Vehicles, Yokohama, November 22-26, 1993.

APPENDIX B – BIBLIOGRAPHY

General References

1. Kenneth G. Ellsworth, Ed., The Car and Locomotive Cyclopedia of American Practices, Simmons-Boardman, Fifth Edition, 1984.

2. D.F. Russell and A.J. Williams, "The Design and Development of a Brake Disc for High-Speed Trains," Proc Instn Mech Engrs Vol 204, Part F: Journal of Rail and Rapid Transit, 1990, pp 133-139.

3. H.G.P. Burt and E. Saumweber, "Microprocessor Control of Wheel Slip," 1985 IEEE/ASME Joint Railroad Conference, Pittsburg.

4. G. Gagarin, U. Kroger, and E. Saumweber, "Eddy-Current Magnetic Track Brakes for High Speed Trains," 1987 IEEE/ASME Joint Railroad Conference, Toronto.

5. P. Lohmeier, "Advanced Braking Technology for High Speed Trains," Proc Int Conf on Speedup Technology for Railway and Maglev Vehicles, Yokohama, Japan, Nov 1993, Vol 2, Paper C4-1-(2), pp 213-217.

AMTRAK Metroliner—Northeast Corridor Service (USA)

1. Max Ephraim, Jr., "The AEM-7 - A New High Speed, Light Weight Electric Passenger Locomotive," ASME Paper 82-RT-7, April 1982.

2. K.G. Ellsworth, Ed., "The Car and Locomotive Cyclopedia of American Practices," 1984 edition, Simmons-Boardman.

3. Telephone conversation with Mr. Ed Lombardi, Engineer of Tests, Amtrak.

ICE—InterCity Express (Germany)

1. T. Rahn, "Development of New High-Speed Motor Train Units to be Operated on the German Federal Railway Network," Proc Instn Mech Engrs Vol 202, IMechE 1988, pp 125-137.

2. Klaus Becker-Lindhorst, "The ICE Brake Equipment," ICE High-tech on Rails, Hestra Vertag (1990), pp 80-85.

3. Anon., "ICE Braking System Strategy," Knorr-Bremse AG München, January '91.

4. Anon., "Questions and Answers on the ICE-Brake System," Knorr-Bremse AG in response to visit by U.S. DOT/FRA delegation, Feb. 27, 1991.

5. Anon., "Safety Relevant Observations on the ICE High Speed Train," DOT/FRA, July 1991.

6. T. Rahn and H.R. Kurz, "The InterCity Express - High-Tech on Rails," Railway Tech. Review Special, Eurail '92, pp 3-13.

7. A. Tayler, ***Hi-Tech Trains***, Quinset Publishing Ltd., 1992, pp 10-21.

8. C. Taylor, "Speed Survey -- TGV Heads Nozomi, as AVE Speeds from Behind," Railway Gazette International October 1993, pp 675-680.

9. Knorr-Bremse AG, "Brakes: Abridged Description for ICE/USA," Ref: TA 19691/43 (from Siemens Transportation Systems, Inc.), 14 May 1993.

TGV Atlantique—Trains a Grande Vitesse (France)

1. H. Rollet, "The TGV Rolling Stock-Its Evolution and Capabilities," GEC Alsthom - Transportation Projects, Publ. No. AH-REB-06 (no date).

2. M. Boiteux and B. Christians, "Brake Gear on Future Atlantic TGV Trainsets," Revue Generale des Chemins de Fer (RGCF), Sept. 1987.

3. D.F. Russel and A.J. Williams, "The Design and Development of a Brake Disc for High-Speed Trains," Proc Instn Mech Engrs Vol 204, IMechE 1990, pp 133-139.

4. Anon., "Safety Relevant Observations on the TGV High Speed Train," DOT/FRA, July 1991.

5. White Paper, "Braking System of the 'Train à Grande Vitesse'," GEC Alsthom/Bombardier, Jan. 8, 1992 [proprietary].

6. A. Tayler, ***Hi-Tech Trains***, Quinset Publishing Ltd., 1992, pp 10-21.

X2000 Tilting Train (Sweden)

1. Anon., "Brake System, Project: X2000US," ABB Traction Dok. No. 6141 033, Oct. 26, 1993.

2. B.M. McLaughlin, "Brake System Overview for the USA High Speed Rail Demo Trains (X2000, ICE)," The Air Brake Association Annual Technical Conference, Chicago, Illinois, September 12-15, 1993.

3. S.P. Caliciotti, S.A. Costanzo, and G. Gagarin, "Demonstration of the X-2000 on Amtrak," Amtrak document (1993, no specific date given).

4. M. Knochenhauer, "X2 -- Safety Analysis of Brake System," ABB Traction Inc. memo, Aug. 28, 1992.

5. R. Nilsson, "X2000 U.S. Demonstration Project -- Summary of Test Results," ABB Traction Inc. memo dated Sept. 21, 1993.

6. Anon., "Safety Relevant Observations on the X2000 Tilting Train," DOT/FRA, March 1991.

7. L. O'Conner, "Tilting Train Smooths Out The Curves," Mechanical Engineering, Feb 1993, pp 62-65.

8. A. Tayler, ***Hi-Tech Trains***, Quinset Publishing Ltd., 1992, pp 10-21.

9. C. Taylor, "Speed Survey -- TGV Heads Nozomi, as AVE Speeds from Behind," Railway Gazette International October 1993, pp 675-680.

10. M. Fermier, "Brake Discs for Passenger Trains - A Theoretical and Experimental Comparison of Temperatures and Stresses in Solid and Ventilated Discs," Proc Instn Mech Engrs Vol 206, Part F: Journal of Rail and Rapid Transit, 1992, pp 37-46.

Intercity 125 & 225 (Great Britain)

1. A. Tayler, ***Hi-Tech Trains***, Quinset Publishing Ltd., 1992, pp 10-21.

2. R. Barnett, "Working Paper 563: British Rail's InterCity 125 and 225," Institute of Urban and Regional Development, University of California at Berkeley, June 1992.

3. O.S. Nock, "Two Miles a Minute: The Story Behind the Conception and Operation of Britain's High Speed and Advanced Passenger Trains," Foreword by Sir Peter Parker. Cambridge: P. Stephens (2nd Ed.), 1983.

4. Additional technical documentation supplied by British Rail.

Shinkansen 200 and 300 (Japan)

1. A. Tayler, ***Hi-Tech Trains***, Quinset Publishing Ltd., 1992, pp 10-21.

2. C. Taylor, "Speed Survey -- TGV Heads Nozomi, as AVE Speeds from Behind," Railway Gazette International October 1993, pp 675-680.

3. Japanese Railway Information, "Railway Systems and Components," No. 8, December 1980.

4. Japanese Railway Information, "Railway Systems and Components," No. 54, October 1992.

5. P. Lohmeier, "Advanced Braking Technology for High Speed Trains," Proc. Int. Conf. on Speedup Technology for Railway and Maglev Vehicles, Nov. 22-26, 1993, Yokohama, Japan, Vol. 2, Paper C4-1-(2), pp 213-217.

ETR450 (Italy)

1. A. Tayler, ***Hi-Tech Trains***, Quinset Publishing Ltd., 1992, pp 10-21.

2. Fiat Ferroviaria, "The Future of Rail Transport is Already Way Down the Line," manufacturer's brochure, no date given.

Transrapid TR07 (Germany)

1. Dorer, R.M and Hathaway, W.T., "Safety of High-Speed Magnetic Levitation Transportation Systems--Preliminary Safety Review of the Transrapid Maglev System," DOT/FRA/ ORD-90/09, U.S. Department of Transportation, Volpe National Transportation Systems Center, November 1990.

2. Heinrich, Dr.-Ing K. and Kretzschmar, Dipl.-Ing R., "Transrapid Maglev System," Hestra-Verlag Darmstadt, Circa 1988.

3. "Assessment of the Through Brake Concept (Eddy Current Brake) for the TR-07," Report No. 947/B 88/146, Tüv Rheinland, Germany, 7/26/1988.

4. "Eddy Current Brake System for the TR-07 Vehicle," Technical Report, Document No. AS 900314 168, Thyssen Henschel, Circa 1989.

5. "Expert Comments on the Eddy Current Brake System of the TR-07 Overall Function of the Emergency/Secondary Brakes," Document No. ZG 900911 - 0216, Tüv Rheinland, 8/25/1990.

6. "Demands on the Eddy Current Brake (Non-Contact Through Brake) for Magnetic Levitation Vehicle TR-07," Document No. ZS 900314 165, Tüv Rheinland, 8/1/88.

7. Henneberger, Dr.-Eng. G, "Final Report-Calculation of Braking and Acceleration Forces of the TR07 Eddy Current Brake," Institute for Electrical Machines, Aachen, Germany, 5/18/90.

8. Letter and enclosures on acceptance testing of the Signal Safety Device (SSW ABI) in the original process certification of the eddy current brake ("WSB") system, (Document No. GA 900314 0177), Tüv Rheinland, 3/13/90.

9. "Short Review of the Braking Philosophies of Transrapid," Tüv Rheinland, 9/6/90.

10. "Determination of Intervals Between Stopping Places," Control No. 900918-0219, Thyssen Henschel, 8/6/90.

11. "Initial Commissioning of Support/Guidance System TR07 at the Emsland Test Facility," Document No. NTA/1486/05/90, 5/14/90.

12. "Maintenance Handbook-TR07 Vehicle Interval Planning," Document No. WR 930128-0331, Thyssen Henschel, December 1992.

13. Benedickt, C., Kunsel, T. and Stichel, S., "Technical Readiness Transrapid Magnetic High-Speed Railway Safety of Transrapid System," Institute for Bahntechnik, 9/7/90.

14. Luedeke, J., "Evaluation of Concepts for Safe Speed Enforcement," Final Report, Battelle, April 3, 1992.

15. A Comparison of U.S. and Foreign Safety Regulations for Potential Application to Maglev Systems, DOT/FRA, Volpe National Transportation Systems Center, October 1992.

HSST—High Speed Surface Transport (Japan)

1. "Technical Description," HSST Corporation, August 1989.

2. Hashimoto, Fumio, "Signalling System of Maglevtype HSST," Railway Signal Division, Kyosan Electric Mfg. Company, Limited, Yokohama, Japan, Circa 1991.

3. "HSST-100A Specifications," HSST Development Corporation, June 11, 1993.

4. "HSST-100A Test Plan," HSST Development Corporation, June 11, 1993.

5. "HSST Development History," Source and Date Unknown.

6. "Urban Transport Type Magnetic Levitation Linear Motor Car Commercialization Research Study--An Overview of the Study Findings," Source and Date Unknown.

7. Gordon, Jeff, "Trip Report--Meeting with MTI and HSST Development Corporation," U.S. Department of Transportation, Research and Special Programs Administration, June 21, 1993.

8. Luedeke, J., "Evaluation of Safe Speed Enforcement Concepts," Final Report, Battelle, April 3, 1992.

MLU002N—Linear Motor Car Maglev (Japan)

1. Sasaki, T. and Tsuruga, H., "Vehicles for Superconductive Maglev System on Yamanashi Test Track," Railway Technical Research Institute (RTRI) and Central Japan Railway, Japan, Proceedings of the International Conference on Speedup Technology for Railway and Maglev Vehicles, Yokohama, November 22-26, 1993.

2. Yoshimura, M. and Okamoto, H., "Development of Aerodynamic Brake System for MLU002N on Miyazaki Test Track," RTRI, Kawasaki Industries, Japan, Proceedings of the International Conference on Speedup Technology for Railway and Maglev Vehicles, Yokohama, November 22-26, 1993.

3. Takizawa, H. and Hamada, K., "The Development of Disc Brake System for Maglev Train," RTRI, Sumitomo Precision Products, Japan, Proceedings of the International Conference on Speedup Technology for Railway and Maglev Vehicles, Yokohama, November 22-26, 1993.

4. Igarashi, M., Oshima, H., Sakamoto, H. and Takakura, T., "Carbon-Carbon Composite Brake System for Maglev Trains," Central Japan Railway, Sumitomo Metal Industries, Sumikin Design and Engineering Company, Ltd., Japan, Proceedings of the International Conference on Speedup Technology for Railway and Maglev Vehicles, Yokohama, November 22-26, 1993.

5. Ozeki, M., "Current Status of Research and Development of Superconducting Maglev System in Japan," RTRI, Japan, Proceedings of the International Conference on Speedup Technology for Railway and Maglev Vehicles, Yokohama, November 22-26, 1993.

6. Igarashi, M., Oshima, H., Sakamoto, H., Qi, K., and Salamat, B., "Digital Brake Control System for Maglev Trains," Central Japan Railway, Sumitomo Metal Industries, Sumitomo Metal Technology Inc., and Crane Co. Hydro-Aire Div., Japan, Proceedings of the International Conference on Speedup Technology for Railway and Maglev Vehicles, Yokohama, November 22-26, 1993.

7. "Linear Motor Car-Maglev," RTRI, Japan, circa 1993.