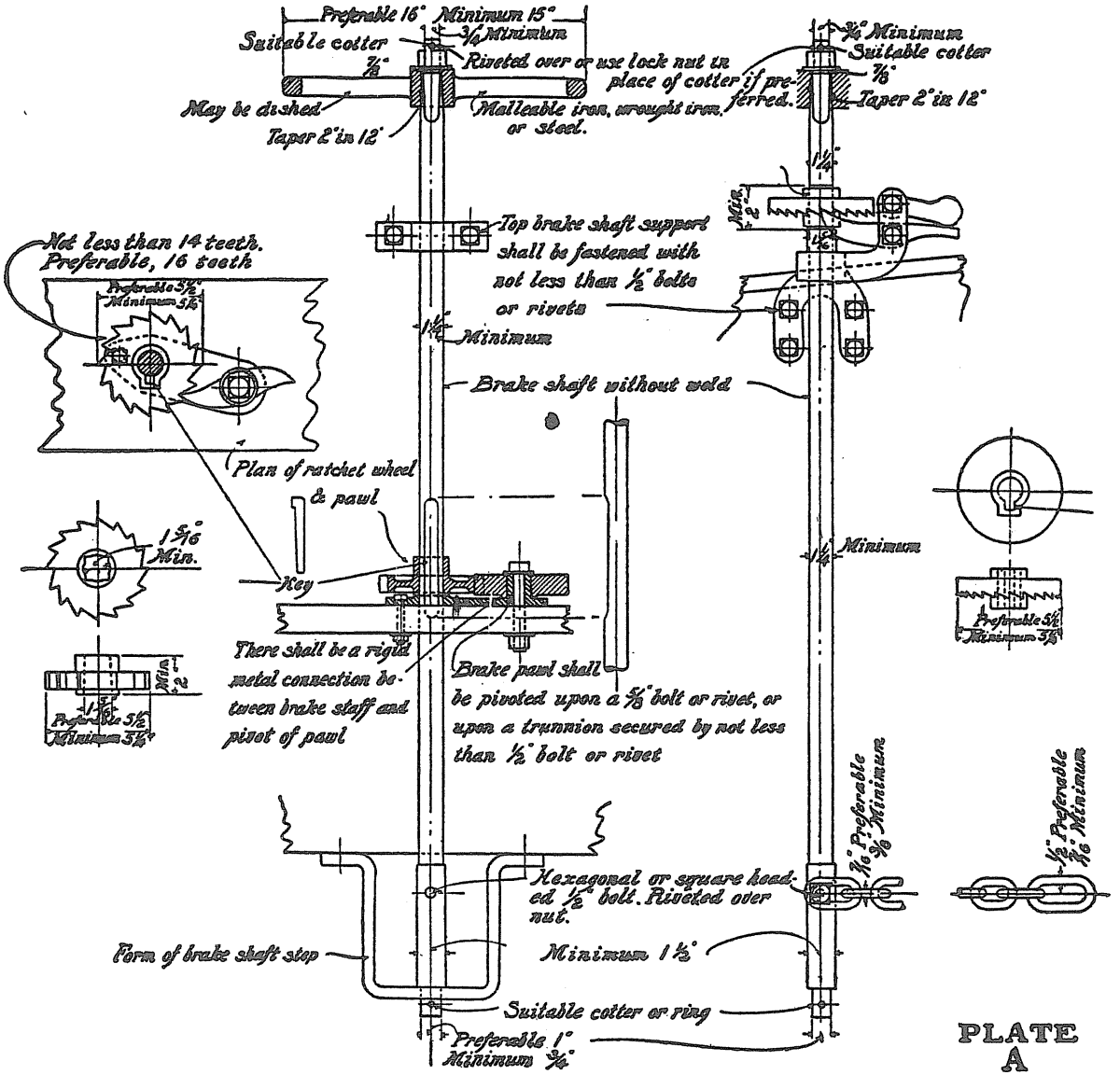

PLATE A

[Any efficient arrangement of ratchet-wheel and pawl may be used.]

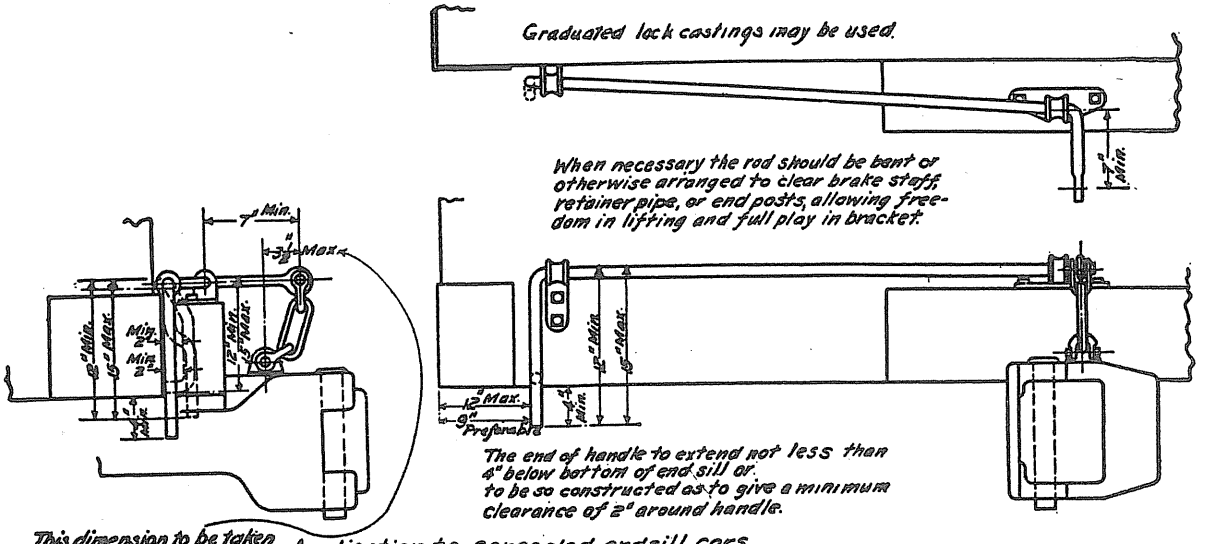

Application to concealed endsill cars.

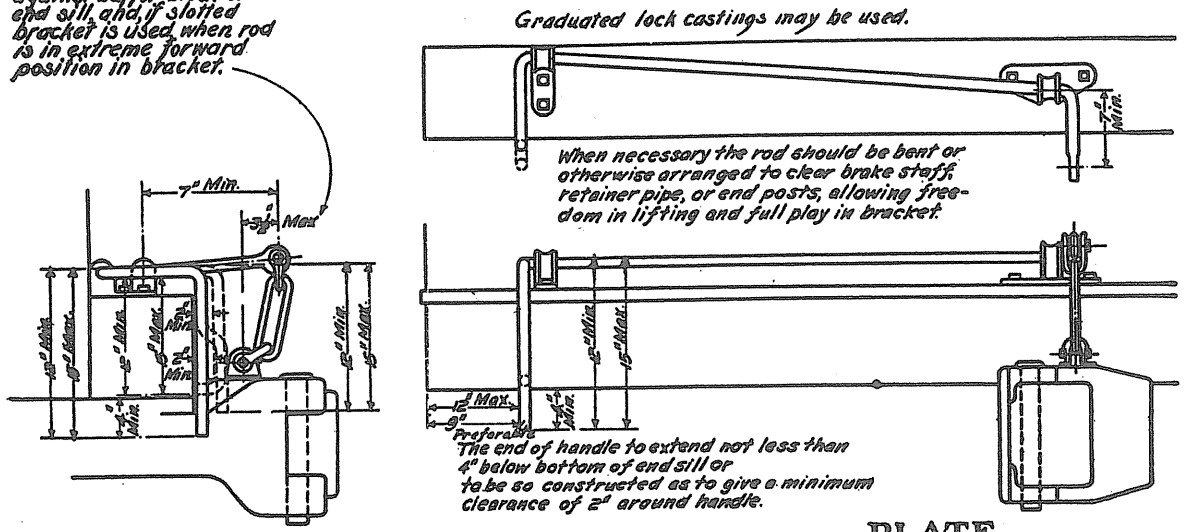

Application to outside endsill cars.

PLATE B

BOX & OTHER HOUSE CARS
PLATE C

THIS PLATE SHOWS ARRANGEMENT IN GENERAL. FOR DETAILS SEE TEXT.
FOR DETAILS OF HAND BRAKE SEE PLATE "A" & TEXT.
FOR ARRANGEMENT OF UNCOUPLING ATTACHMENT SEE PLATE "B" & TEXT.

APPLIANCE	DIMENSIONS	PREFERABLY	MAXIMUM	MINIMUM
BRAKE SHAFT	A	-	22"	17"
RUNNING BOARD (WIDTH)	B	20"	-	16"
" " (CLEARANCE)	C	-	10"	6"
◎ SILL STEPS (LENGTH OF TREAD)	D	12"	-	10"
" " (HEIGHT ABOVE RAIL)	E	22"	24"	-
LADDERS (SPACING FROM ROOF)	F	-	18"	12"
" & HANDHOLDS (CLEARANCE)	G	2½"	-	2"
ROOF HANDHOLDS (FROM EDGE OF ROOF)	H	-	18"	6"
▣ HOR. SIDE & END HANDHOLDS (LENGTH)	I	24"	-	16"
" " " " (HEIGHT)	J	-	30"	24"

◎ ADDITIONAL SILL STEP TREAD, WHEN NEEDED, SEE TEXT.
▣ HORIZONTAL END HANDHOLDS: WHEN 16" LENGTH CANNOT BE APPLIED, 14" LENGTH MAY BE USED.

ALL BOLTS & RIVETS ⅝" MIN. DIA.
BOLTS ⅝" DIA. MAY BE USED FOR WOODEN TREADS WHICH ARE GAINED INTO STILES.
ALL IRON OR STEEL LADDER TREADS & HANDHOLDS ⅝" MIN. DIA.
MINIMUM CLEARANCE OF ALL LADDER TREADS & HANDHOLDS 2" PREFERABLY 2½".

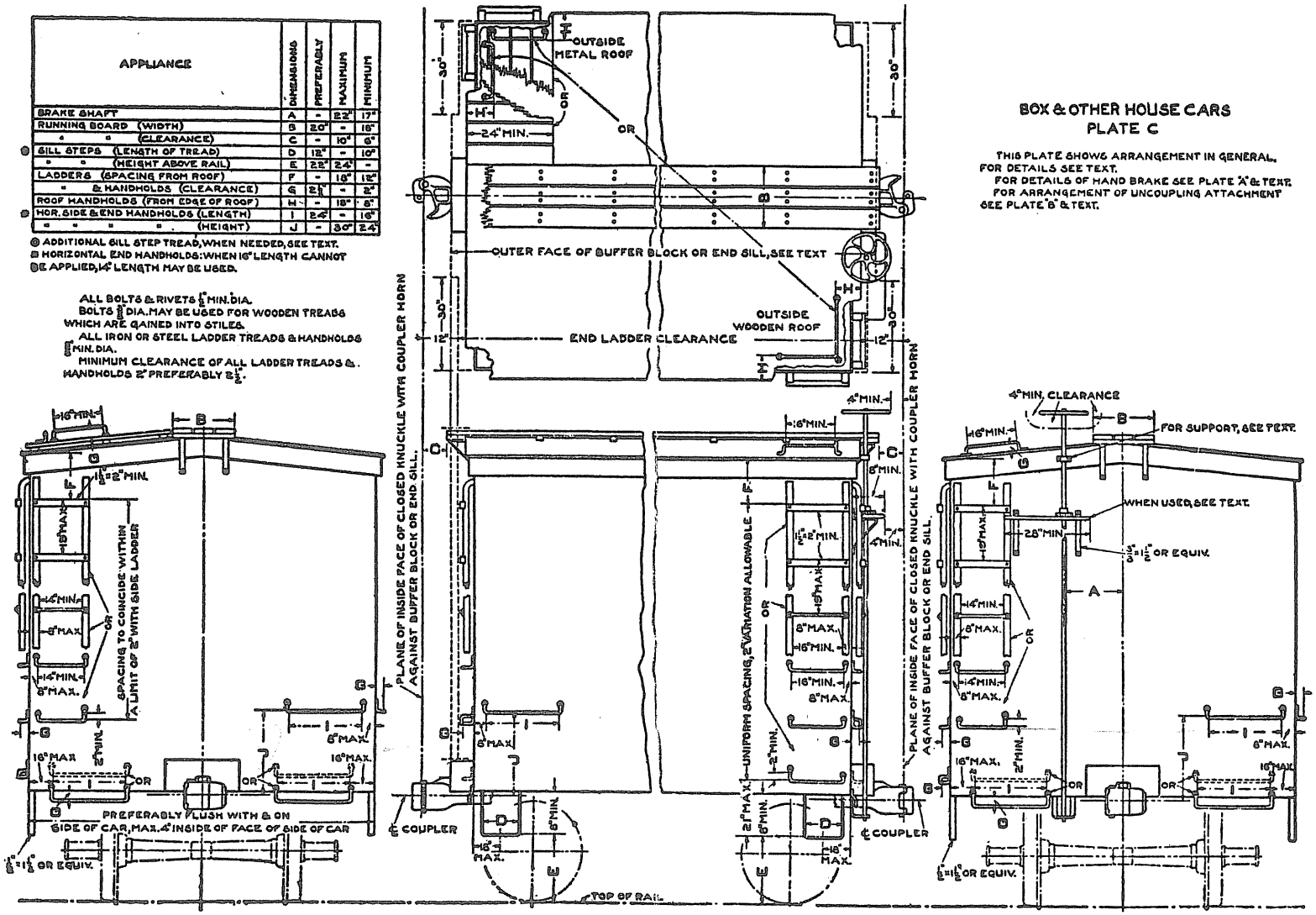

APPLIANCE	DIMENSIONS	PREFERABLY	MAXIMUM	MINIMUM
BRAKE SHAFT	A	—	22"	17"
RUNNING BOARD (WIDTH)	B	20"	—	18"
" " (CLEARANCE)	C	—	10"	6"
⊕ SILL STEPS (LENGTH OF TREAD)	D	12"	—	10"
" " (HEIGHT ABOVE RAIL)	E	22"	24"	—
LADDERS (SPACING FROM ROOF)	F	—	18"	12"
" & HANDHOLDS (CLEARANCE)	G	2½"	—	2"
ROOF HANDHOLDS (FROM EDGE OF ROOF)	H	—	18"	8"
⊕ HOR. SIDE & END HANDHOLDS (LENGTH)	I	24"	—	16"
" & VERT. SIDE & END HANDHOLDS (HEIGHT)	J	—	30"	24"
ADDITIONAL HOR. END HANDHOLDS "	K	—	60"	30"
VERTICAL END HANDHOLDS (LENGTH)	L	24"	—	18"

⊕ ADDITIONAL SILL STEP TREAD, WHEN NEEDED, SEE TEXT.
⊕ HORIZONTAL END HANDHOLDS: WHEN 16" LENGTH CANNOT BE APPLIED, 14" LENGTH MAY BE USED

ALL BOLTS & RIVETS ½ MIN. DIA.
BOLTS ⅝" DIA. MAY BE USED FOR WOODEN TREADS WHICH ARE GAINED INTO STILES.
ALL IRON OR STEEL LADDER TREADS & HANDHOLDS ⅝" MIN. DIA.
MIN. CLEARANCE OF ALL LADDER TREADS & HANDHOLDS 2" PREFERABLY 2½".

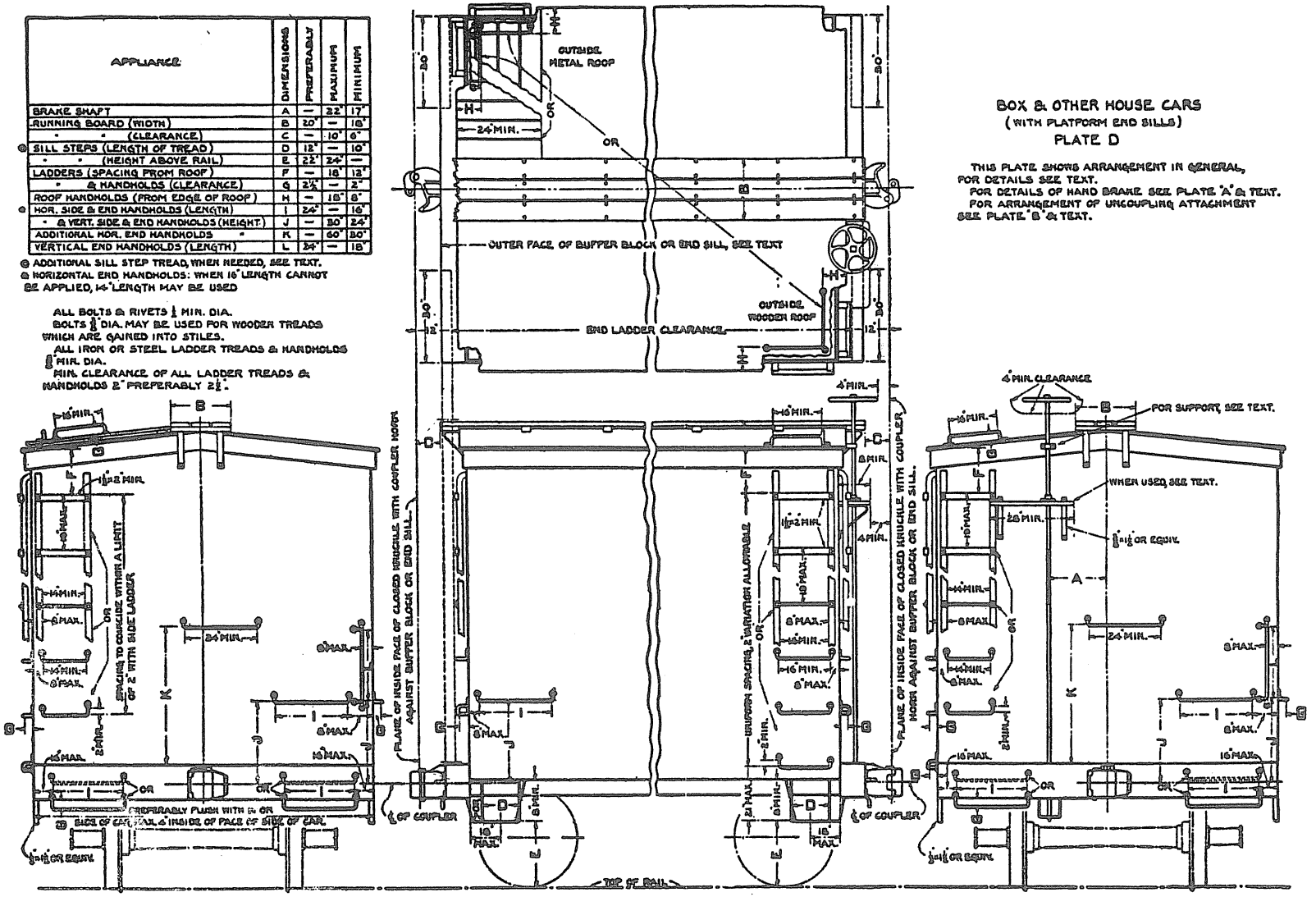

BOX & OTHER HOUSE CARS
(WITH PLATFORM END SILLS)
PLATE D

THIS PLATE SHOWS ARRANGEMENT IN GENERAL, FOR DETAILS SEE TEXT.
FOR DETAILS OF HAND BRAKE SEE PLATE "A" & TEXT.
FOR ARRANGEMENT OF UNCOUPLING ATTACHMENT SEE PLATE "B" & TEXT.

APPLIANCE	DIMENSIONS	PREFERABLY	MAXIMUM	MINIMUM
● SILL STEPS (LENGTH OF TREAD)	D	12"	-	10"
" " (HEIGHT ABOVE RAIL)	E	22"	24"	-
LADDERS & HANDHOLDS (CLEARANCE)	G	2½"	-	2"
● HOR. SIDE & END HANDHOLDS (LENGTH)	I	24"	-	18"
" " " " (HEIGHT)	J	-	30"	24"

● ADDITIONAL SILL STEP TREAD, WHEN NEEDED, SEE TEXT.
● HORIZONTAL END HANDHOLDS: WHEN 18" LENGTH CANNOT BE APPLIED, 14" LENGTH MAY BE USED.

ALL BOLTS & RIVETS ⅝" MIN. DIA.
BOLTS ⅝" DIA. MAY BE USED FOR WOODEN TREADS WHICH ARE GAINED INTO STILES.
ALL IRON OR STEEL LADDER TREADS & HANDHOLDS ⅝" MIN. DIA.
MINIMUM CLEARANCE OF ALL LADDER TREADS & HANDHOLDS 2" PREFERABLY 2½".

HOPPER CARS & HIGH-SIDE GONDOLAS WITH FIXED ENDS

(CARS WITH SIDES MORE THAN 36" ABOVE FLOOR)

PLATE E

THIS PLATE SHOWS ARRANGEMENT IN GENERAL. FOR DETAILS SEE TEXT.
FOR DETAILS OF HAND BRAKE SEE PLATE "A" & TEXT.
FOR ARRANGEMENT OF UNCOUPLING ATTACHMENT SEE PLATE "B" & TEXT.

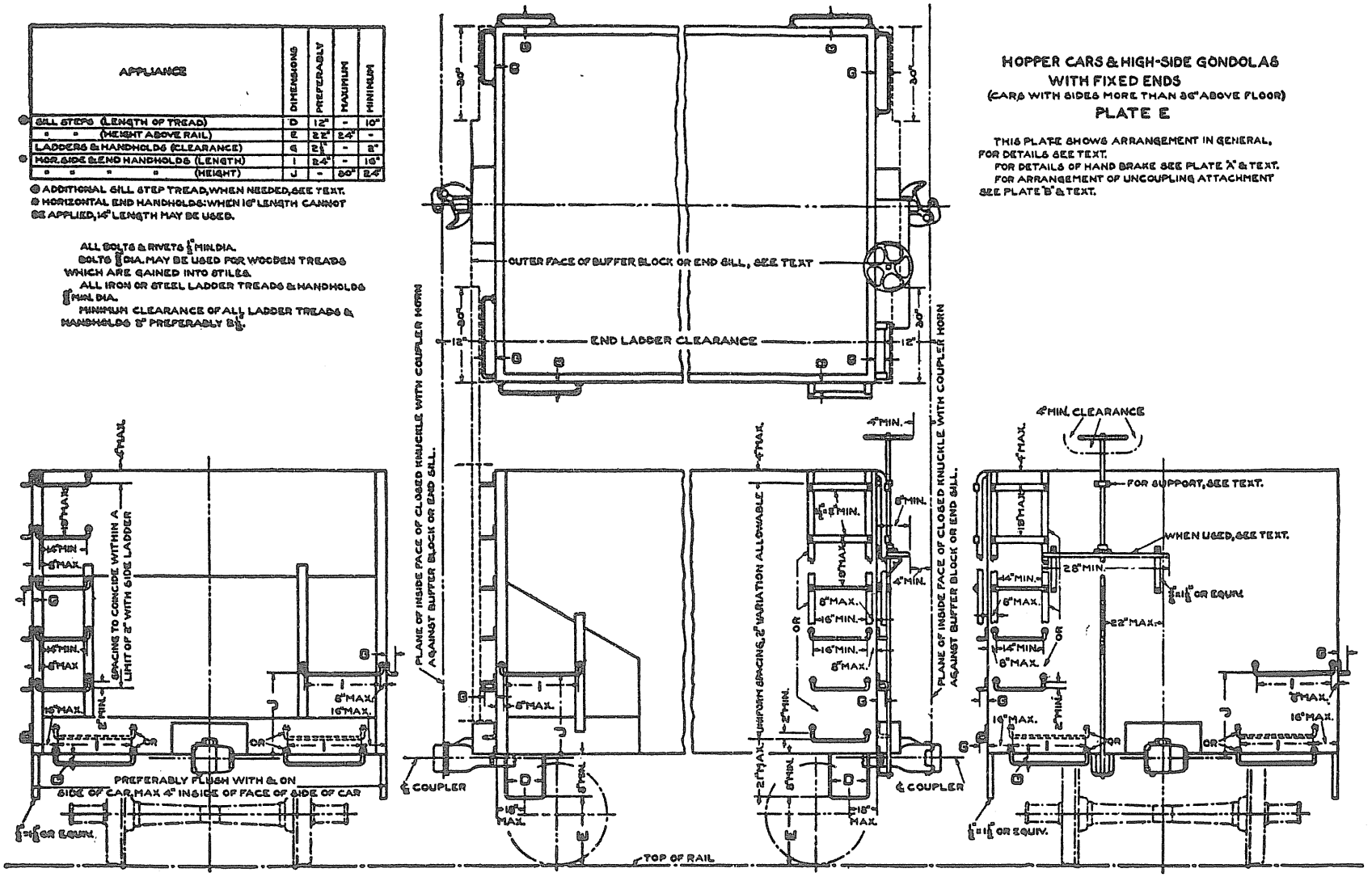

APPLIANCE	DIMENSIONS	PREFERABLY	MAXIMUM	MINIMUM
◎ SILL STEPS (LENGTH OF TREAD)	D	12"	—	10"
" " (HEIGHT ABOVE RAIL)	E	22"	24"	—
LADDERS & HANDHOLDS (CLEARANCE)	G	2½"	—	2"
⊙ HOR. SIDE & END HANDHOLDS (LENGTH)	I	24"	—	16"
HOR. & VERT. SIDE & END HANDHOLDS (HEIGHT)	J	—	30"	24"
ADDITIONAL HOR. END HANDHOLDS "	K	—	60"	30"
VERTICAL END HANDHOLDS (LENGTH)	L	24"	—	18"

◎ ADDITIONAL SILL STEP TREAD, WHEN NEEDED, SEE TEXT.
⊙ HORIZONTAL END HANDHOLDS: WHEN 16" LENGTH CANNOT BE APPLIED, 14" LENGTH MAY BE USED.

ALL BOLTS & RIVETS ½" MIN. DIA.
BOLTS ⅝" DIA. MAY BE USED FOR WOODEN TREADS WHICH ARE GAINED INTO STILES.
ALL IRON OR STEEL LADDER TREADS & HANDHOLDS ⅝" MIN. DIA.
MIN. CLEARANCE OF ALL LADDER TREADS & HANDHOLDS 2" PREFERABLY 2½".

HOPPER CARS & HIGH-SIDE GONDOLAS WITH FIXED ENDS

(CARS WITH SIDES MORE THAN 56" ABOVE FLOOR)
(WITH PLATFORM END SILLS)

PLATE F

THIS PLATE SHOWS ARRANGEMENT IN GENERAL, FOR DETAILS SEE TEXT.
FOR DETAILS OF HAND BRAKE SEE PLATE "A" & TEXT.
FOR ARRANGEMENT OF UNCOUPLING ATTACHMENT SEE PLATE "B" & TEXT.

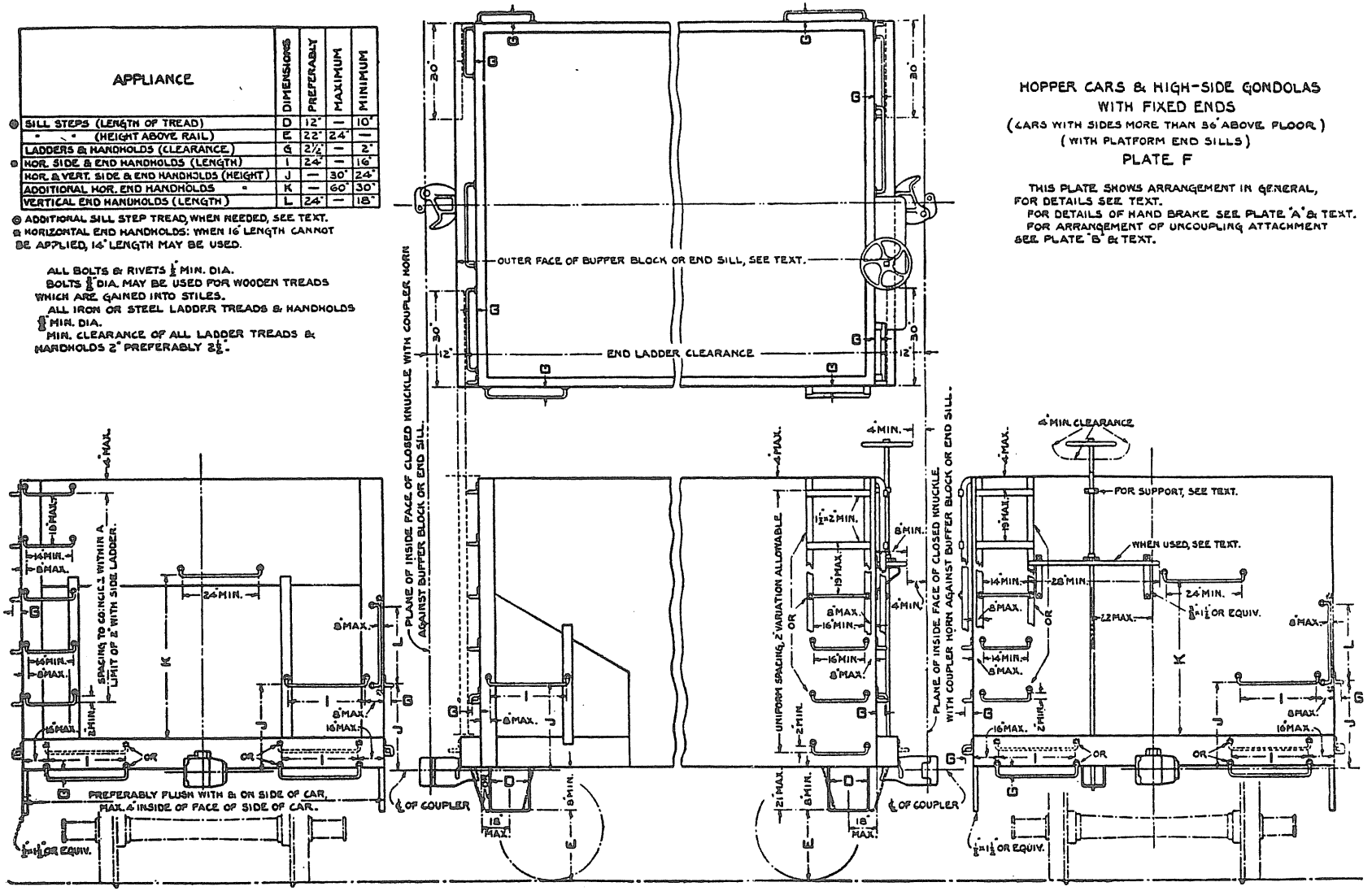

APPLIANCE	DIMENSIONS	PREFERABLY	MAXIMUM	MINIMUM
● SILL STEPS (LENGTH OF TREAD)	D	12"	-	10"
" " (HEIGHT ABOVE RAIL)	E	22"	24"	-
LADDERS & HANDHOLDS (CLEARANCE)	G	2½"	-	2"
⊕ HOR. SIDE & END HANDHOLDS (LENGTH)	I	24"	-	16"
" " " " (HEIGHT)	J	-	30"	24"

● ADDITIONAL SILL STEP TREAD, WHEN NEEDED, SEE TEXT.
⊕ HORIZONTAL END HANDHOLDS: WHEN 16" LENGTH CANNOT BE APPLIED, 14" LENGTH MAY BE USED.

ALL BOLTS & RIVETS ½" MIN. DIA.
BOLTS ⅝" DIA. MAY BE USED FOR WOODEN TREADS WHICH ARE GAINED INTO STILES.
ALL IRON OR STEEL LADDER TREADS & HANDHOLDS ⅝" MIN. DIA.
MINIMUM CLEARANCE OF ALL LADDER TREADS & HANDHOLDS 2" PREFERABLY 2½".

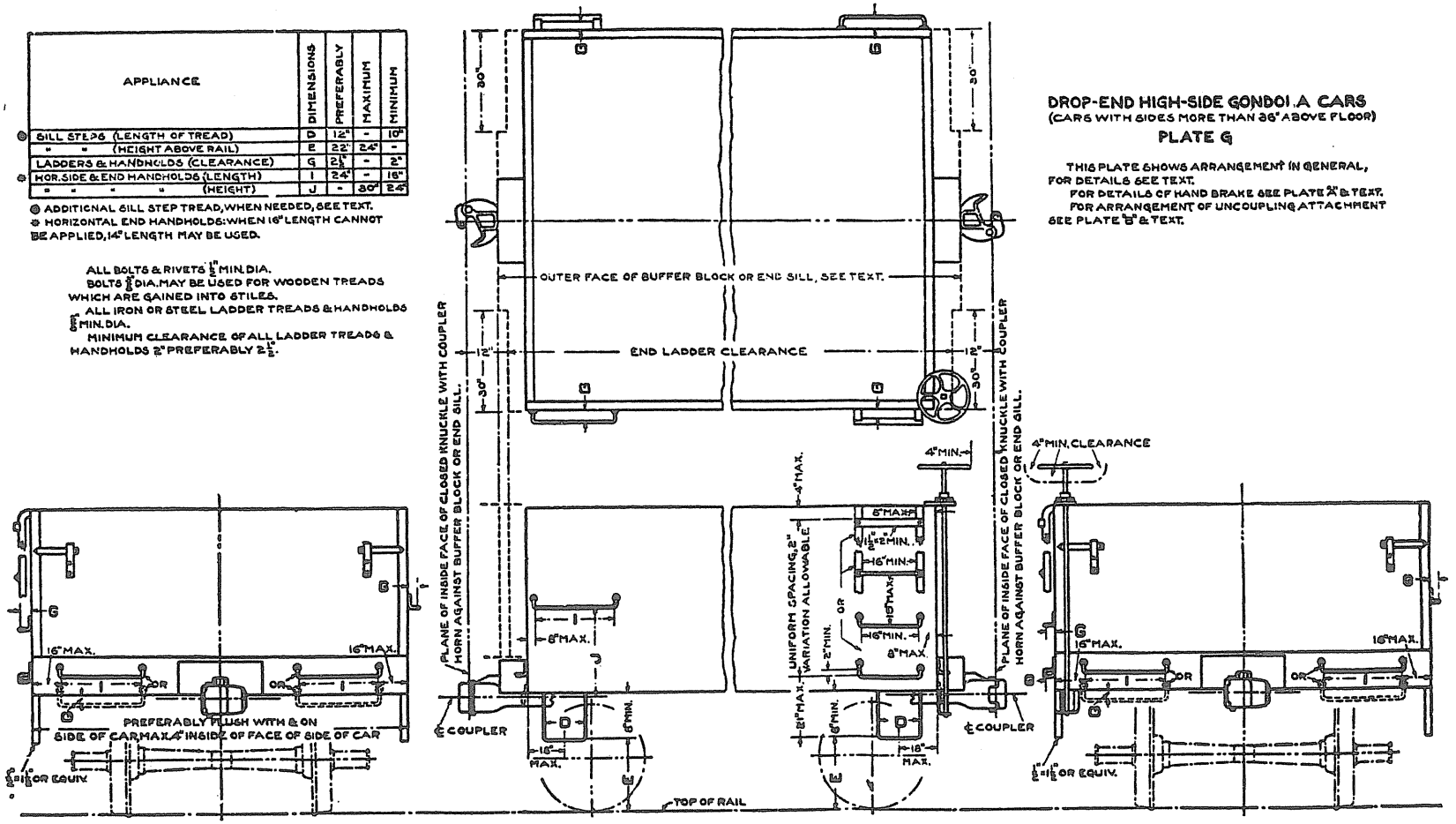

DROP-END HIGH-SIDE GONDOLA CARS
(CARS WITH SIDES MORE THAN 36" ABOVE FLOOR)

PLATE G

THIS PLATE SHOWS ARRANGEMENT IN GENERAL, FOR DETAILS SEE TEXT.
FOR DETAILS OF HAND BRAKE SEE PLATE "A" & TEXT.
FOR ARRANGEMENT OF UNCOUPLING ATTACHMENT SEE PLATE "B" & TEXT.

DROP-END HIGH-SIDE GONDOLA CARS

(CARS WITH SIDES MORE THAN 36" ABOVE FLOOR)

(WITH PLATFORM END SILLS)

PLATE H

THIS PLATE SHOWS ARRANGEMENT IN GENERAL, FOR DETAILS SEE TEXT.
FOR DETAILS OF HAND BRAKE SEE PLATE "A" & TEXT.
FOR ARRANGEMENT OF UNCOUPLING ATTACHMENT SEE PLATE "B" & TEXT.

APPLIANCE	DIMENSIONS	PREFERABLY	MAXIMUM	MINIMUM
⊕ SILL STEPS (LENGTH OF TREAD)	D	12"	—	10"
" " (HEIGHT ABOVE RAIL)	E	22"	24"	—
LADDERS & HANDHOLDS (CLEARANCE)	G	2½"	—	2"
⊕ HOR. SIDE & END HANDHOLDS (LENGTH)	I	24"	—	16"
" " " " (HEIGHT)	J	—	30"	24"

⊕ ADDITIONAL SILL STEP TREAD, WHEN NEEDED, SEE TEXT.
⊕ HORIZONTAL END HANDHOLDS: WHEN 16" LENGTH CANNOT BE APPLIED, 14" LENGTH MAY BE USED.

ALL BOLTS & RIVETS ½" MIN. DIA.
BOLTS ⅝" DIA. MAY BE USED FOR WOODEN TREADS WHICH ARE GAINED INTO STILES.
ALL IRON OR STEEL LADDER TREADS & HANDHOLDS ⅝" MIN. DIA.
MINIMUM CLEARANCE OF ALL LADDER TREADS & HANDHOLDS 2" PREFERABLY 2½".

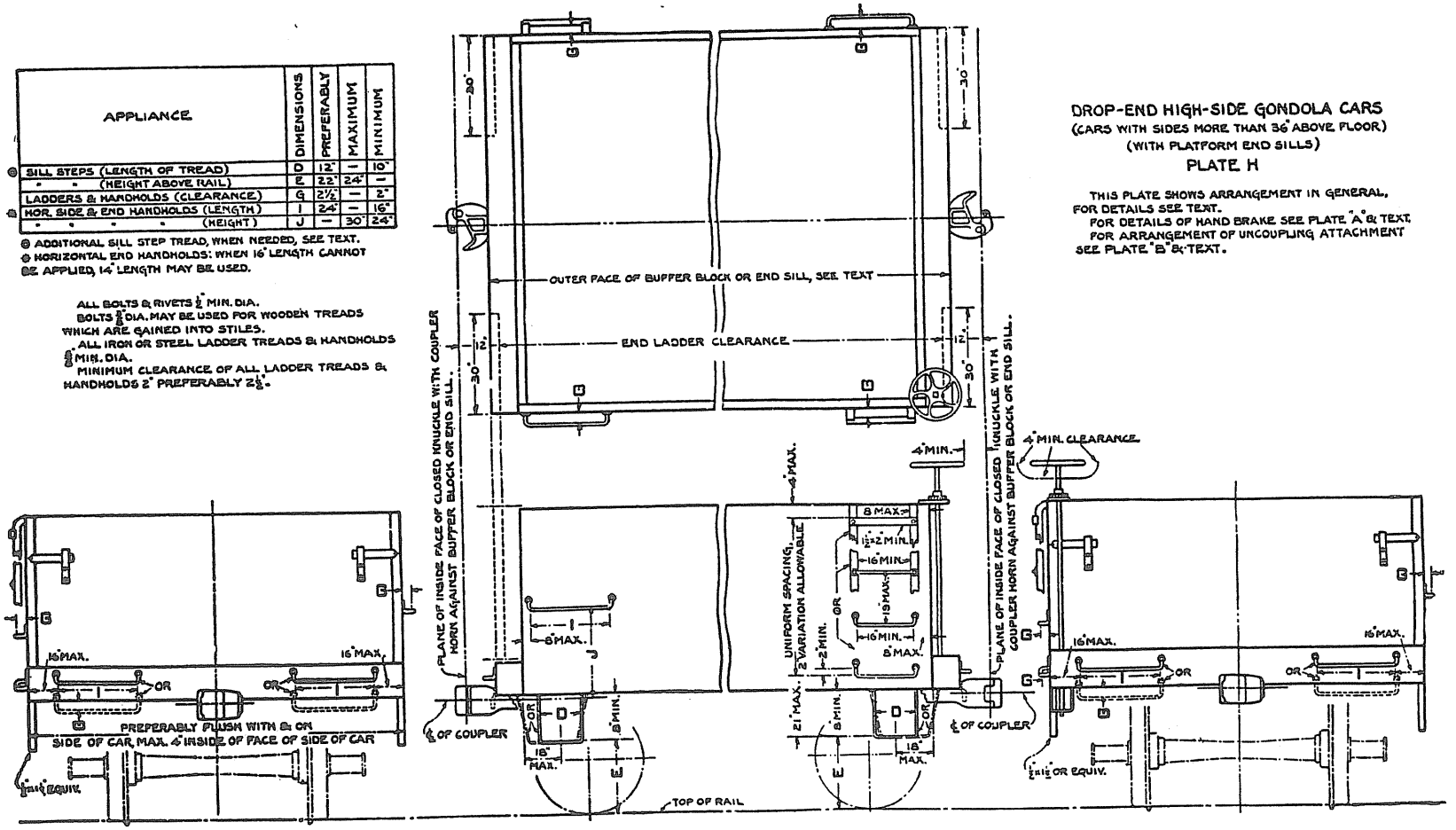

APPLIANCE	DIMENSIONS	PREFERABLY	MAXIMUM	MINIMUM
⊕ SILL STEPS (LENGTH OF TREAD)	D	12"	-	10"
" " (HEIGHT ABOVE RAIL)	E	22"	24"	-
HANDHOLDS (CLEARANCE)	G	$2\frac{1}{2}$"	-	2"
⊕ HOR. SIDE & END HANDHOLDS (LENGTH)	I	24"	-	16"
⊕ " " " " (HEIGHT)	J	-	30"	24"

⊕ ADDITIONAL SILL STEP TREAD, WHEN NEEDED, SEE TEXT.
⊕ HORIZONTAL END HANDHOLDS: WHEN 16" LENGTH CANNOT BE APPLIED, 14" LENGTH MAY BE USED.
⊕ IF CAR CONSTRUCTION WILL PERMIT, SEE TEXT.

ALL BOLTS & RIVETS $\frac{5}{8}$" MIN. DIA.
ALL IRON OR STEEL HANDHOLDS $\frac{5}{8}$" MIN. DIA.
MINIMUM CLEARANCE OF ALL HANDHOLDS 2" PREFERABLY $2\frac{1}{2}$".

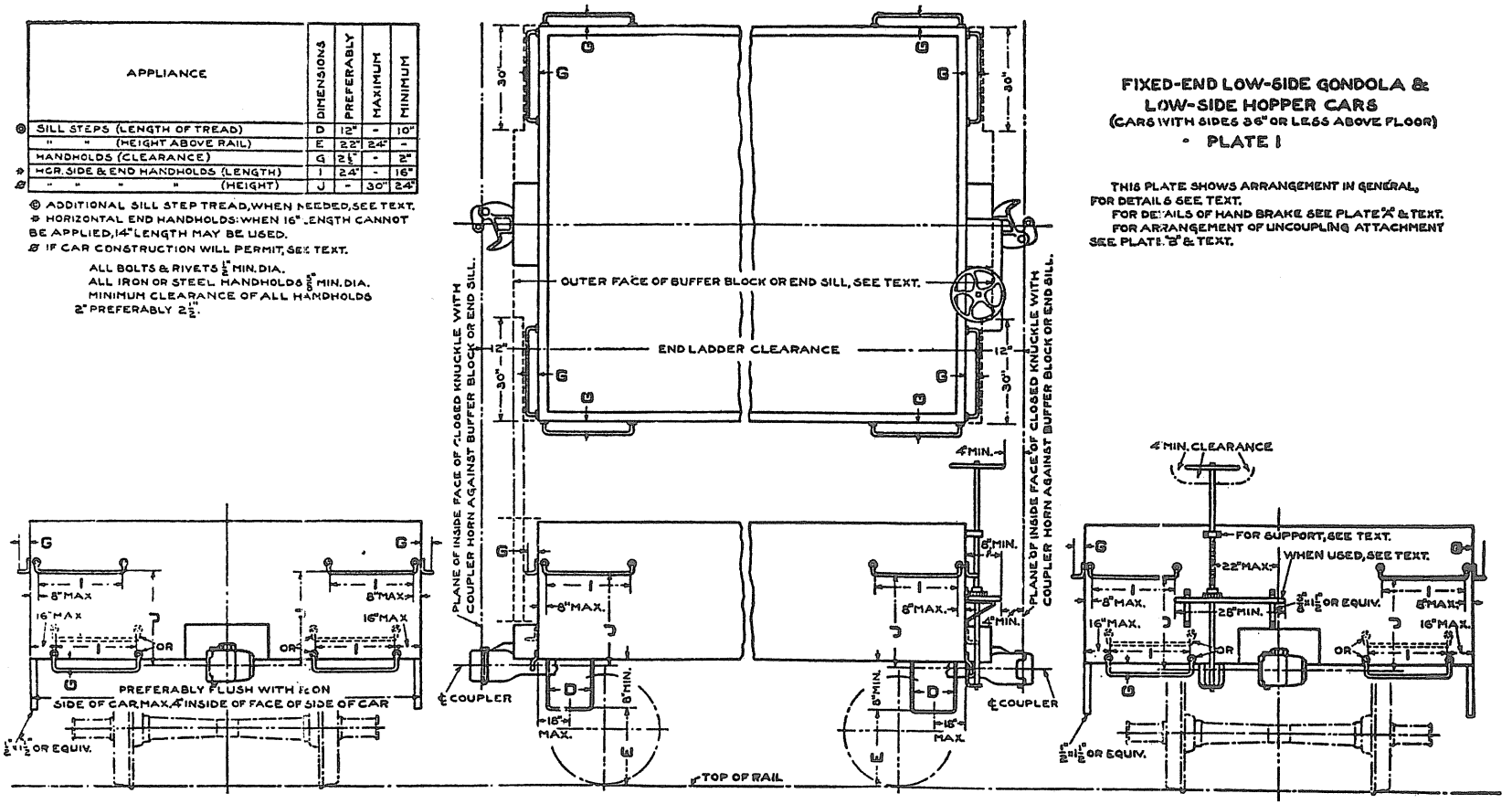

FIXED-END LOW-SIDE GONDOLA & LOW-SIDE HOPPER CARS

(CARS WITH SIDES 36" OR LESS ABOVE FLOOR)

PLATE I

THIS PLATE SHOWS ARRANGEMENT IN GENERAL, FOR DETAILS SEE TEXT.
FOR DETAILS OF HAND BRAKE SEE PLATE "A" & TEXT.
FOR ARRANGEMENT OF UNCOUPLING ATTACHMENT SEE PLATE "B" & TEXT.

FIXED-END LOW-SIDE GONDOLA & LOW-SIDE HOPPER CARS.

(CARS WITH SIDES 36" OR LESS ABOVE FLOOR)
(WITH PLATFORM END SILLS)

PLATE J

THIS PLATE SHOWS ARRANGEMENT IN GENERAL, FOR DETAILS SEE TEXT.
FOR DETAILS OF HAND BRAKE SEE PLATE "A" & TEXT.
FOR ARRANGEMENT OF UNCOUPLING ATTACHMENT SEE PLATE "B" & TEXT.

APPLIANCE	DIMENSIONS	PREFERABLY	MAXIMUM	MINIMUM
⊙ SILL STEPS (LENGTH OF TREAD)	D	12"	—	10"
" " (HEIGHT ABOVE RAIL)	E	22"	24"	—
HANDHOLDS (CLEARANCE)	G	2½"	—	2"
✻ HOR. SIDE & END HANDHOLDS (LENGTH)	I	24"	—	16"
⊘ " " " " (HEIGHT)	J	—	30"	24"

⊙ ADDITIONAL SILL STEP TREAD, WHEN NEEDED, SEE TEXT.
✻ HORIZONTAL END HANDHOLDS: WHEN 16" LENGTH CANNOT BE APPLIED, 14" LENGTH MAY BE USED.
⊘ IF CAR CONSTRUCTION WILL PERMIT—SEE TEXT.

ALL BOLTS & RIVETS ½" MIN. DIA.
ALL IRON OR STEEL HANDHOLDS ⅝" MIN. DIA.
MINIMUM CLEARANCE OF ALL HANDHOLDS 2" PREFERABLY 2½".

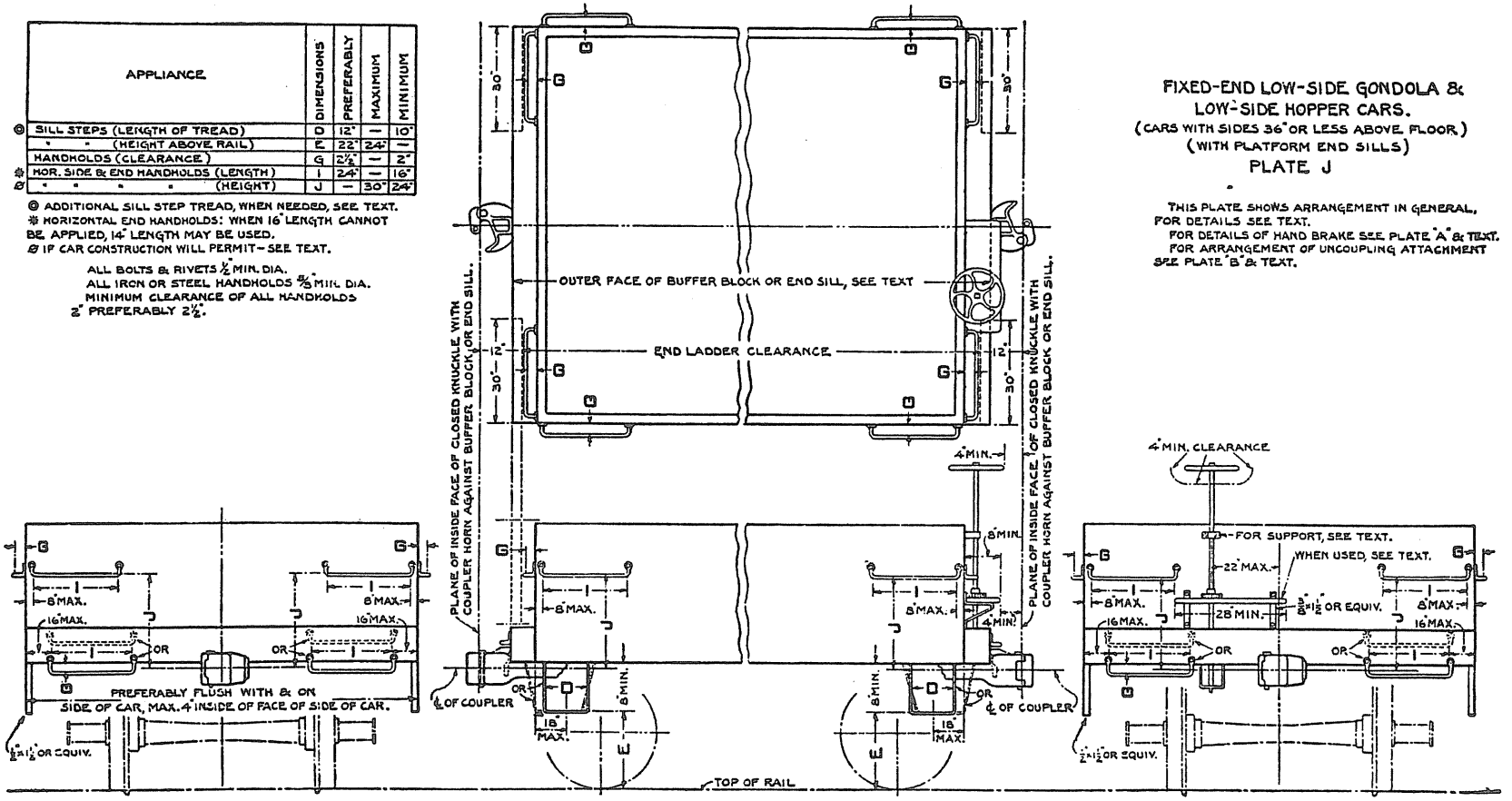

APPLIANCE	DIMENSIONS	PREFERARLY	MAXIMUM	MINIMUM
● SILL STEPS (LENGTH OF TREAD)	D	12"	-	10"
" " (HEIGHT ABOVE RAIL)	E	22"	24"	-
HANDHOLDS (CLEARANCE)	G	$2\frac{1}{2}$"	-	2"
# HOR. SIDE & END HANDHOLDS (LENGTH)	I	24"	-	16"
● " " HANDHOLDS (HEIGHT)	J	-	30"	24"

● ADDITIONAL SILL STEP TREAD, WHEN NEEDED, SEE TEXT.
HORIZONTAL END HANDHOLDS: WHEN 16" LENGTH CANNOT BE APPLIED, 14" LENGTH MAY BE USED.
● IF CAR CONSTRUCTION WILL PERMIT, SEE TEXT.

ALL BOLTS & RIVETS $\frac{3}{4}$" MIN. DIA.
ALL IRON OR STEEL HANDHOLDS $\frac{3}{4}$" MIN. DIA.
MINIMUM CLEARANCE OF ALL HANDHOLDS 2" PREFERABLY $2\frac{1}{2}$".

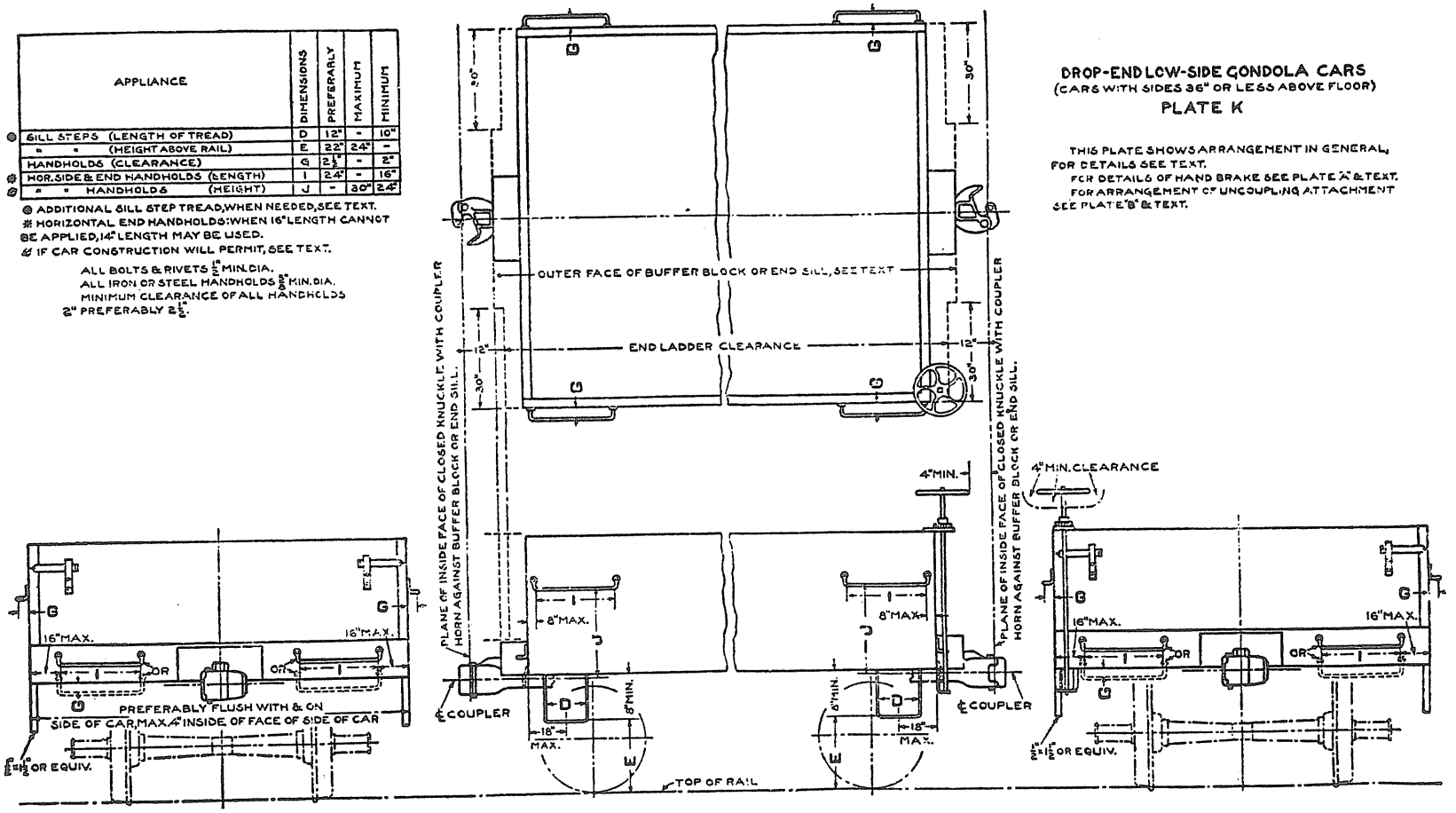

DROP-END LOW-SIDE GONDOLA CARS
(CARS WITH SIDES 36" OR LESS ABOVE FLOOR)

PLATE K

THIS PLATE SHOWS ARRANGEMENT IN GENERAL, FOR DETAILS SEE TEXT.
FOR DETAILS OF HAND BRAKE SEE PLATE "A" & TEXT.
FOR ARRANGEMENT OF UNCOUPLING ATTACHMENT SEE PLATE "B" & TEXT.

DROP-END LOW-SIDE GONDOLA CARS
(CARS WITH SIDES 36" OR LESS ABOVE FLOOR)
(WITH PLATFORM END SILLS)
PLATE L

THIS PLATE SHOWS ARRANGEMENT IN GENERAL, FOR DETAILS SEE TEXT.
FOR DETAILS OF HAND BRAKE SEE PLATE "A" & TEXT.
FOR ARRANGEMENT OF UNCOUPLING ATTACHMENT SEE PLATE "B" & TEXT.

APPLIANCE	DIMENSIONS	PREFERABLY	MAXIMUM	MINIMUM
◎ SILL STEPS (LENGTH OF TREAD)	D	12"	—	10"
" " (HEIGHT ABOVE RAIL)	E	22"	24"	—
HANDHOLDS (CLEARANCE)	G	2½"	—	2"
⊞ HOR. SIDE & END HANDHOLDS (LENGTH)	I	24"	—	16"
◎ " " HANDHOLDS (HEIGHT)	J	—	30"	24"

◎ ADDITIONAL SILL STEP TREAD, WHEN NEEDED, SEE TEXT.
⊞ HORIZONTAL END HANDHOLDS: WHEN 16" LENGTH CANNOT BE APPLIED, 14" LENGTH MAY BE USED.
◎ IF CAR CONSTRUCTION WILL PERMIT - SEE TEXT.

ALL BOLTS & RIVETS ½" MIN. DIA.
ALL IRON OR STEEL HANDHOLDS ⅝" MIN. DIA.
MINIMUM CLEARANCE OF ALL HANDHOLDS 2" PREFERABLY 2½".

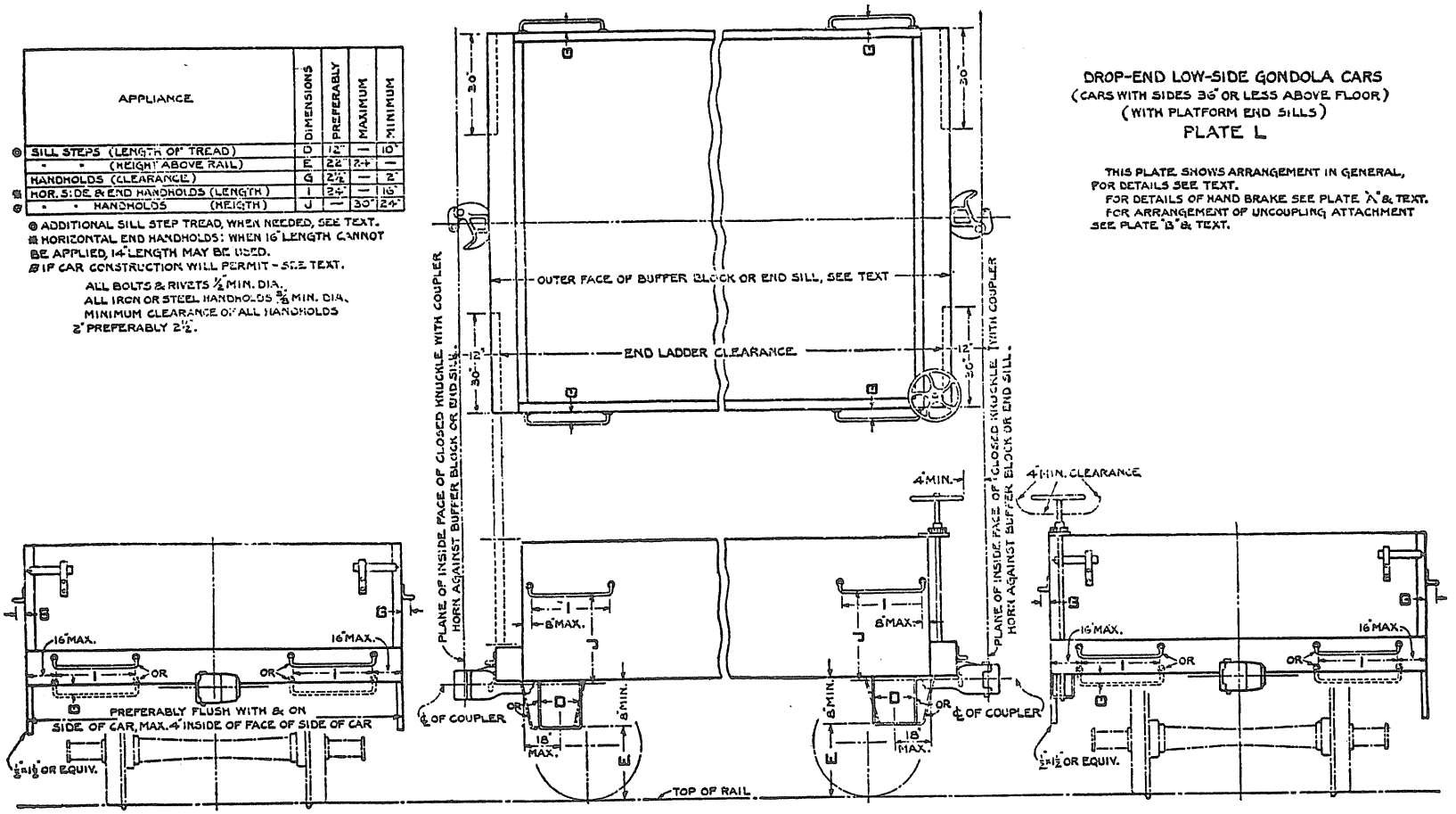

FLAT CARS

(CARS WITH SIDES 12" OR LESS ABOVE FLOOR MAY BE EQUIPPED SAME AS FLAT CARS)

PLATE M

THIS PLATE SHOWS ARRANGEMENT IN GENERAL, FOR DETAILS SEE TEXT.
FOR DETAILS OF HAND BRAKE SEE PLATE "A" & TEXT.
FOR ARRANGEMENT OF UNCOUPLING ATTACHMENT SEE PLATE "B" & TEXT.

APPLIANCE	DIMENSIONS	PREFERABLY	MAXIMUM	MINIMUM
© SILL STEPS: (LENGTH OF TREAD)	D	12"	—	10"
" " (HEIGHT ABOVE RAIL)	E	22"	24"	—
HANDHOLDS (CLEARANCE)	G	2½"	—	2"
* HOR. SIDE & END HANDHOLDS (LENGTH)	I	24"	—	16"

© ADDITIONAL SILL STEP TREAD, WHEN NEEDED, SEE TEXT.
* HORIZONTAL END HANDHOLDS: WHEN 16" LENGTH CANNOT BE APPLIED, 14" LENGTH MAY BE USED.

ALL BOLTS & RIVETS ½" MIN. DIA.
ALL IRON OR STEEL HANDHOLDS ⅝" MIN. DIA.
MINIMUM CLEARANCE OF ALL HANDHOLDS 2" PREFERABY 2½".

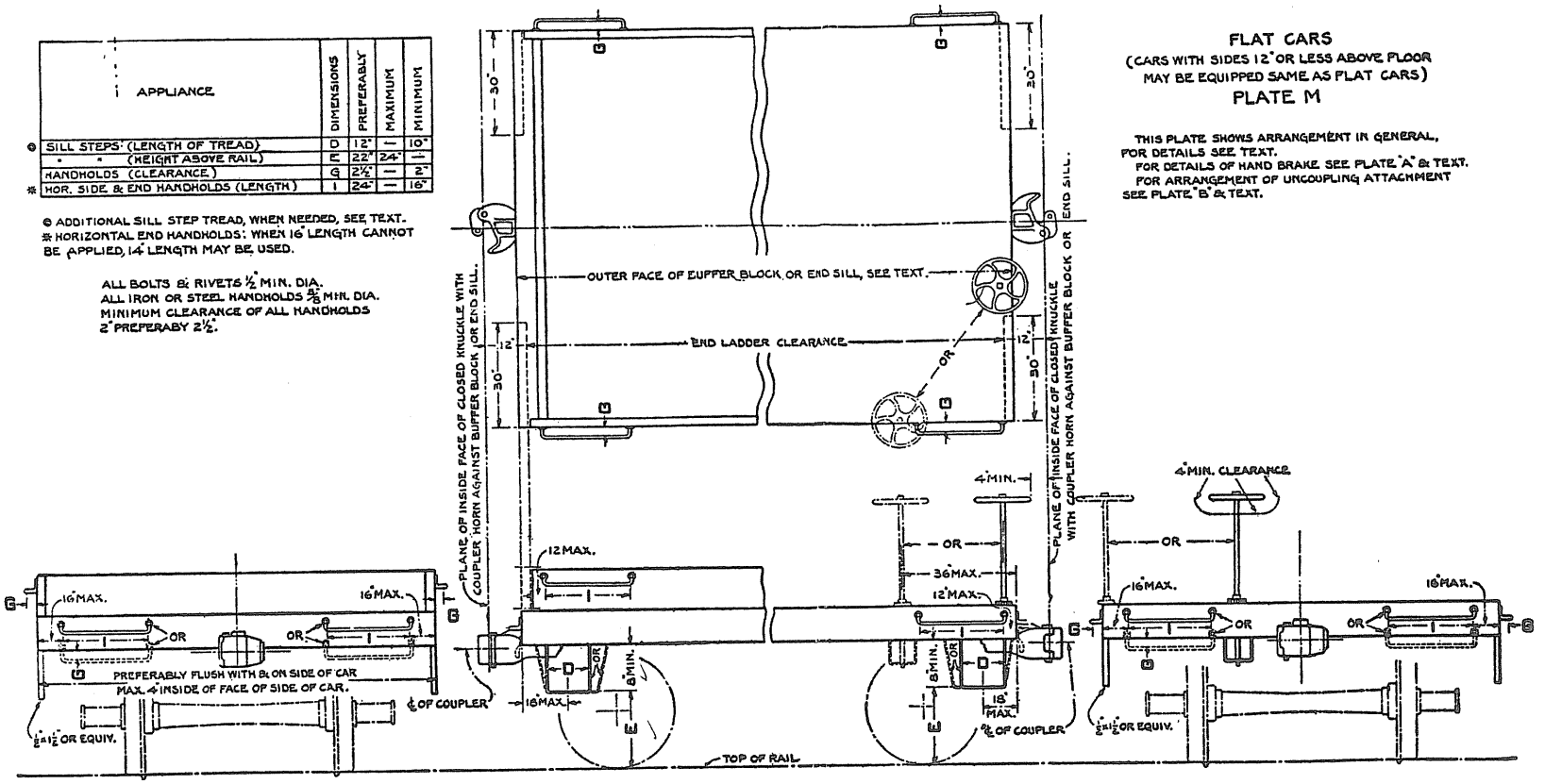

APPLIANCE	DIMENSIONS	PREFERABLY	MAXIMUM	MINIMUM
⊙ SILL STEPS (LENGTH OF TREAD)	D	12"	—	10
" " (HEIGHT ABOVE RAIL)	E	22"	24"	—
HANDHOLDS (CLEARANCE)	G	2½"	—	2"
⊛ SIDE & END HANDHOLDS (LENGTH)	I	24"	—	16"
TANK-HEAD HANDHOLDS & SAFETY RAILINGS (HEIGHT)	K	—	60"	30"

⊙ ADDITIONAL SILL STEP TREAD, WHEN NEEDED, SEE TEXT.
⊛ HORIZONTAL END HANDHOLDS: WHEN 16" LENGTH CANNOT BE APPLIED, 14" LENGTH MAY BE USED.

ALL BOLTS & RIVETS ½" MIN. DIA.
ALL IRON OR STEEL HANDHOLDS ⅝" MIN. DIA.
MIN. CLEARANCE OF ALL HANDHOLDS 2"
PREFERABLY 2½".

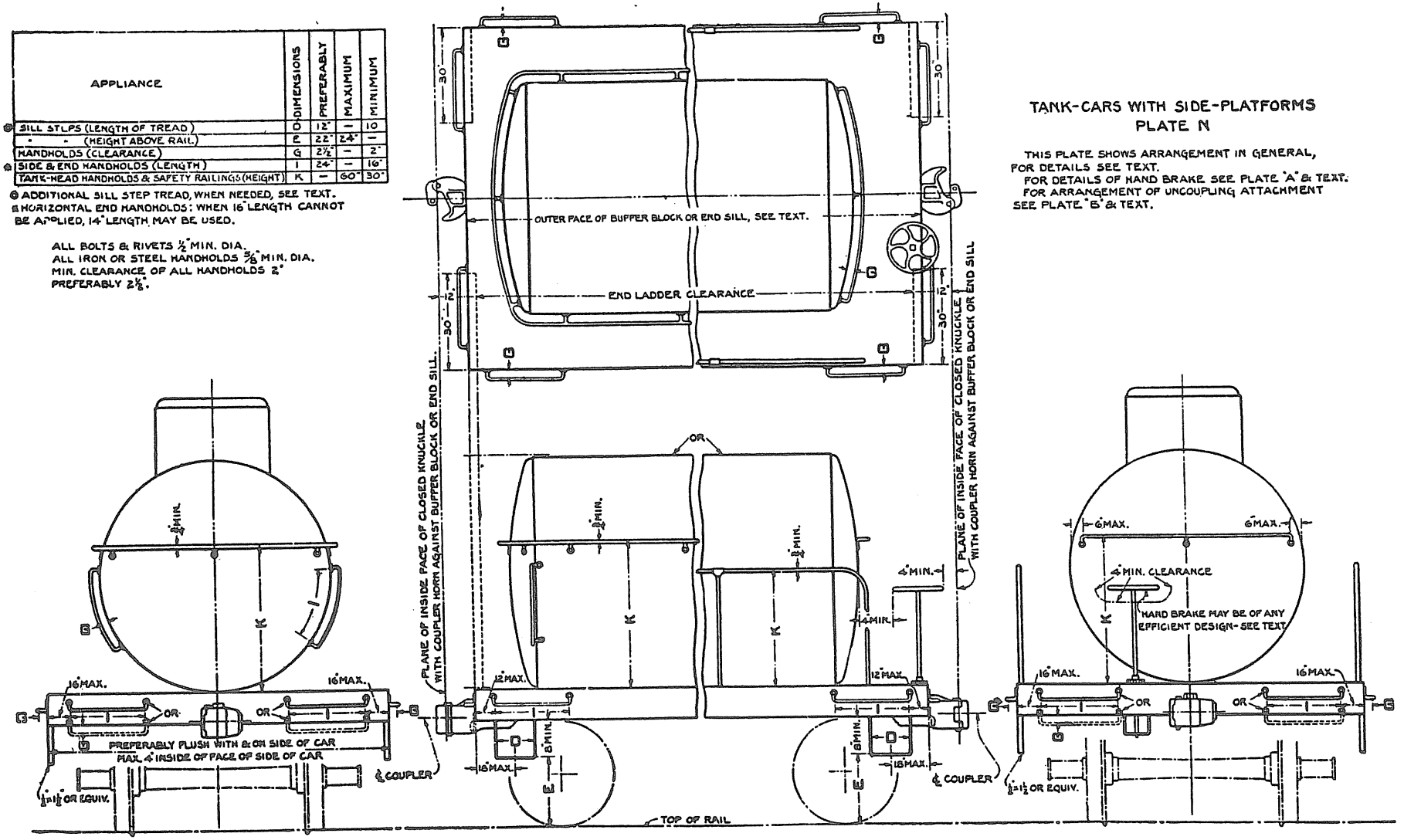

TANK-CARS WITH SIDE-PLATFORMS
PLATE N

THIS PLATE SHOWS ARRANGEMENT IN GENERAL, FOR DETAILS SEE TEXT.
FOR DETAILS OF HAND BRAKE SEE PLATE "A" & TEXT.
FOR ARRANGEMENT OF UNCOUPLING ATTACHMENT SEE PLATE "B" & TEXT.

APPLIANCE	DIMENSIONS	PREFERABLY	MAXIMUM	MINIMUM
● SILL STEPS (LENGTH OF TREAD)	D	11"	-	10"
" " (HEIGHT ABOVE RAIL)	E	22"	24"	-
LADDERS & HANDHOLDS (CLEARANCE)	G	2½"	-	2"
○ SIDE & END HANDHOLDS (LENGTH)	I	14"	-	16"
TANK-HEAD HANDHOLDS & SAFETY RAILINGS (HEIGHT)	K	-	60"	50"

● ADDITIONAL SILL STEP TREAD, WHEN NEEDED, SEE TEXT.
○ HORIZONTAL END HANDHOLDS: WHEN 16" LENGTH CANNOT BE APPLIED, 14" LENGTH MAY BE USED.

ALL BOLTS & RIVETS ⅝" MIN. DIA.
ALL IRON OR STEEL LADDER TREADS & HANDHOLDS ⅝" MIN. DIA.
MINIMUM CLEARANCE OF ALL LADDER TREADS & HANDHOLDS 2" PREFERABLY 2½".

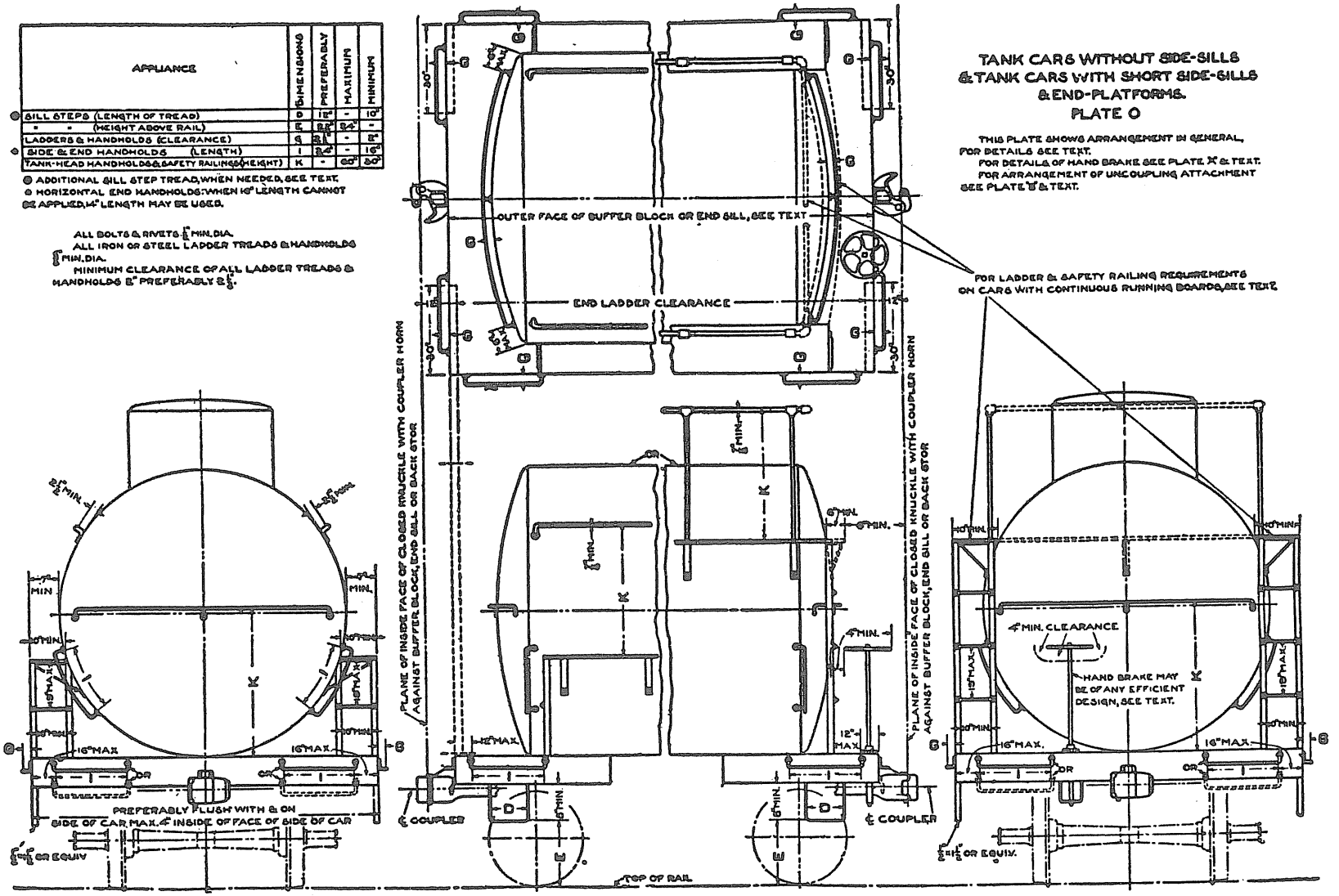

TANK CARS WITHOUT SIDE-SILLS & TANK CARS WITH SHORT SIDE-SILLS & END-PLATFORMS.

PLATE O

THIS PLATE SHOWS ARRANGEMENT IN GENERAL, FOR DETAILS SEE TEXT.
FOR DETAILS OF HAND BRAKE SEE PLATE X & TEXT.
FOR ARRANGEMENT OF UNCOUPLING ATTACHMENT SEE PLATE Y & TEXT.

FOR LADDER & SAFETY RAILING REQUIREMENTS ON CARS WITH CONTINUOUS RUNNING BOARDS, SEE TEXT.

APPLIANCE	DIMENSIONS	PREFERABLY	MAXIMUM	MINIMUM
ⓒ SILL STEPS (LENGTH OF TREAD)	D	12"	-	10"
" " (HEIGHT ABOVE RAIL)	E	22"	24"	-
HANDHOLDS (CLEARANCE)	G	2½"	-	2"
ⓑ SIDE & END HANDHOLDS (LENGTH)	I	24"	-	16"
SAFETY RAILINGS (HEIGHT)	K	-	60"	30"

ⓒ ADDITIONAL SILL STEP TREAD, WHEN NEEDED, SEE TEXT.
ⓑ HORIZONTAL END HANDHOLDS WHEN 16" LENGTH CANNOT BE APPLIED, 14" LENGTH MAY BE USED.

ALL BOLTS & RIVETS ⅝" MIN. DIA
ALL IRON OR STEEL HANDHOLDS ⅝" MIN DIA.
MINIMUM CLEARANCE OF ALL HANDHOLDS 2"
PREFERABLY 2½"

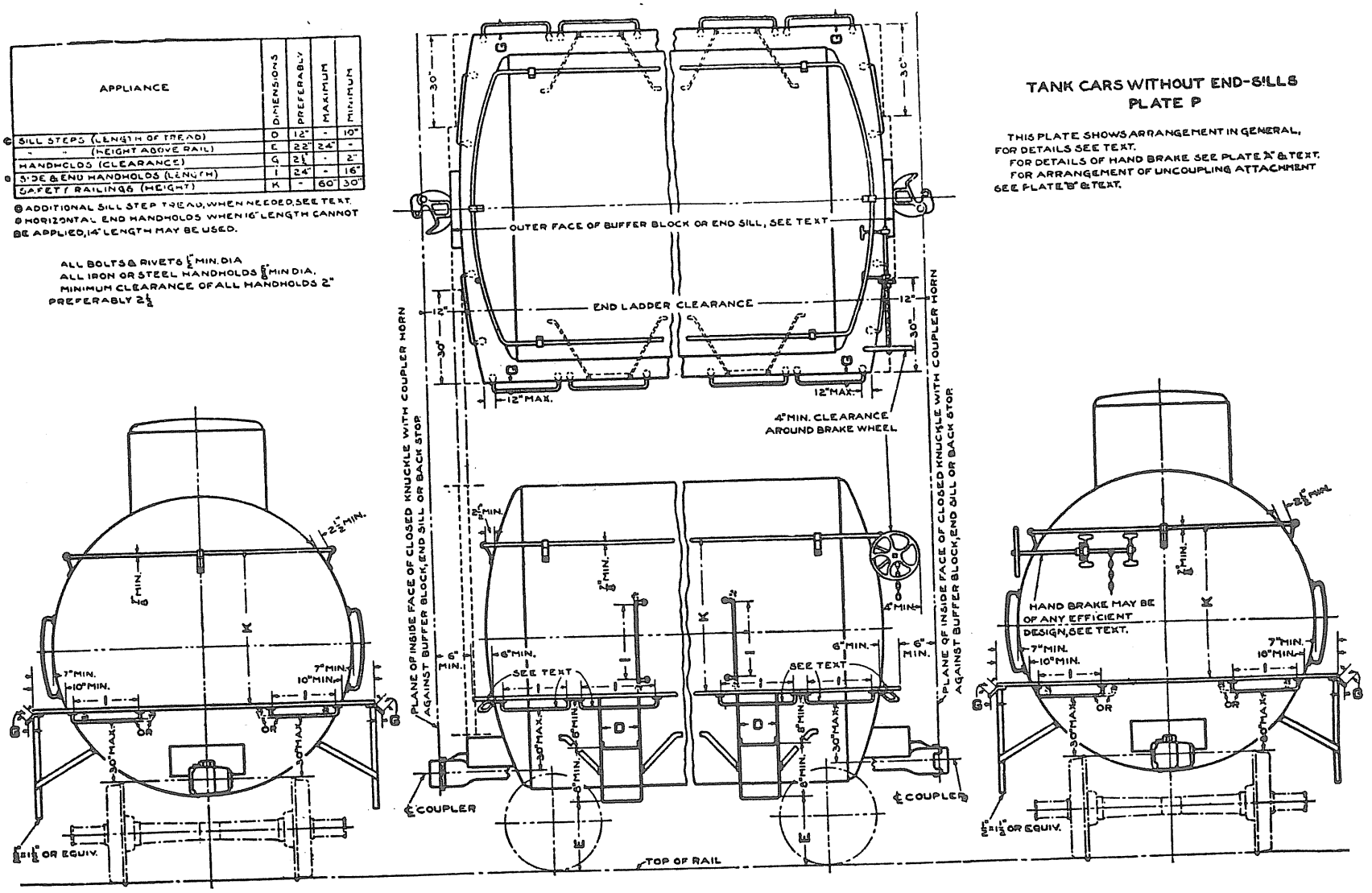

TANK CARS WITHOUT END-SILLS
PLATE P

THIS PLATE SHOWS ARRANGEMENT IN GENERAL, FOR DETAILS SEE TEXT.
FOR DETAILS OF HAND BRAKE SEE PLATE "A" & TEXT.
FOR ARRANGEMENT OF UNCOUPLING ATTACHMENT SEE PLATE "B" & TEXT.

CABOOSE CARS WITH PLATFORMS
PLATE Q

THIS PLATE SHOWS ARRANGEMENT IN GENERAL.
FOR DETAILS SEE TEXT.
FOR DETAILS OF HAND BRAKE SEE PLATE "A" & TEXT.
FOR ARRANGEMENT OF UNCOUPLING ATTACHMENT SEE PLATE "B" & TEXT.

APPLIANCE	DIMENSION	PREFERABLY	MAXIMUM	MINIMUM
RUNNING BOARD (WIDTH)	D	20"	—	18"
" " (CLEARANCE)	C	—	10"	8"
HANDHOLDS (CLEARANCE)	G	2½"	—	2"
ROOF HANDHOLDS (FROM EDGE OF ROOF)	H	—	15"	8"
HORIZONTAL END HANDHOLDS (LENGTH)	I	24"	—	16"

D HORIZONTAL END HANDHOLDS: WHEN 16" LENGTH CANNOT BE APPLIED, 14" LENGTH MAY BE USED.

ALL BOLTS & RIVETS ⅝" MIN. DIA.
ALL IRON OR STEEL HANDHOLDS ⅝" MIN. DIA.
MIN. CLEARANCE OF ALL HANDHOLDS 2"
PREFERABLY 2½".

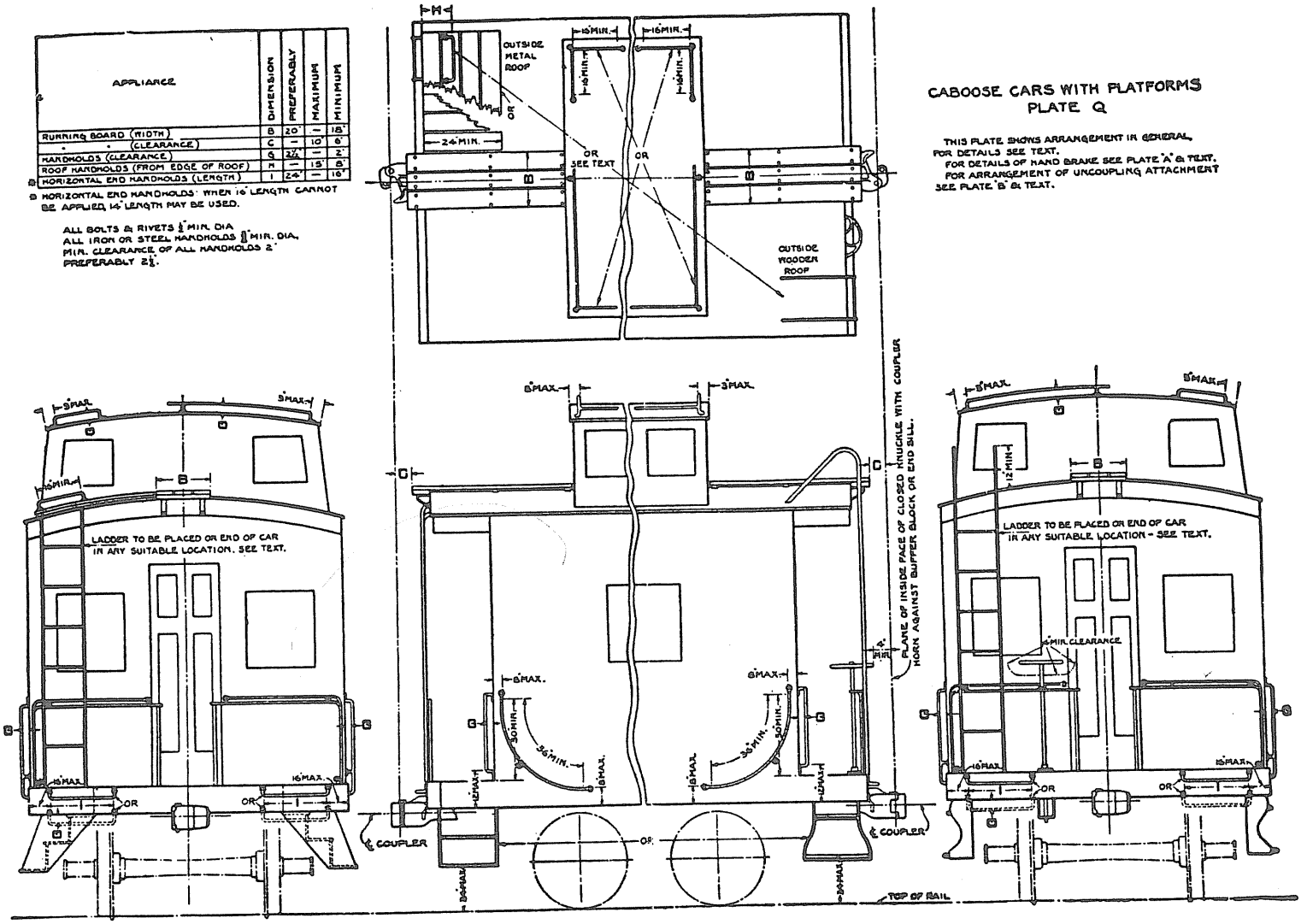

CABOOSE CARS WITHOUT PLATFORMS
PLATE R

THIS PLATE SHOWS ARRANGEMENT IN GENERAL.
FOR DETAILS SEE TEXT.
FOR DETAILS OF HAND BRAKE, SEE PLATE "N" & TEXT.
FOR ARRANGEMENT OF UNCOUPLING ATTACHMENT SEE PLATE "B" & TEXT.

APPLIANCE	DIMENSIONS	PREFERABLY	MAXIMUM	MINIMUM
RUNNING BOARD (WIDTH)	B	20"	-	18"
" " (CLEARANCE)	C	-	10"	4"
● SILL STEPS (LENGTH OF TREAD)	D	12"	-	10"
" " (HEIGHT ABOVE RAIL)	E	2½"	24"	-
LADDERS (SPACING FROM ROOF)	F	-	18"	12"
" & HANDHOLDS (CLEARANCE)	G	2½	-	4"
●●ROOF HANDHOLDS (FROM EDGE OF ROOF)	H	-	18"	12"
●●END, SIDE & END HANDHOLDS (LENGTH)	I	24"	-	16"
" " " (HEIGHT)	J	-	30"	24"

● ADDITIONAL SILL STEP TREAD, WHEN NEEDED, SEE TEXT.
●● HORIZONTAL END HANDHOLDS WHEN 16" LENGTH CANNOT BE APPLIED, 10" LENGTH MAY BE USED.

SIDE DOOR STEP BOLTS, ¾" MIN. DIA.
ALL OTHER BOLTS & RIVETS ⅝" MIN. DIA.
BOLTS ⅝" DIA. MAY BE USED FOR WOODEN TREADS WHICH ARE GAINED INTO STILES
ALL IRON OR STEEL LADDER TREADS & HANDHOLDS ⅝" MIN. DIA.
MINIMUM CLEARANCE OF ALL LADDER TREADS & HANDHOLDS 2" PREFERABLY 2½"

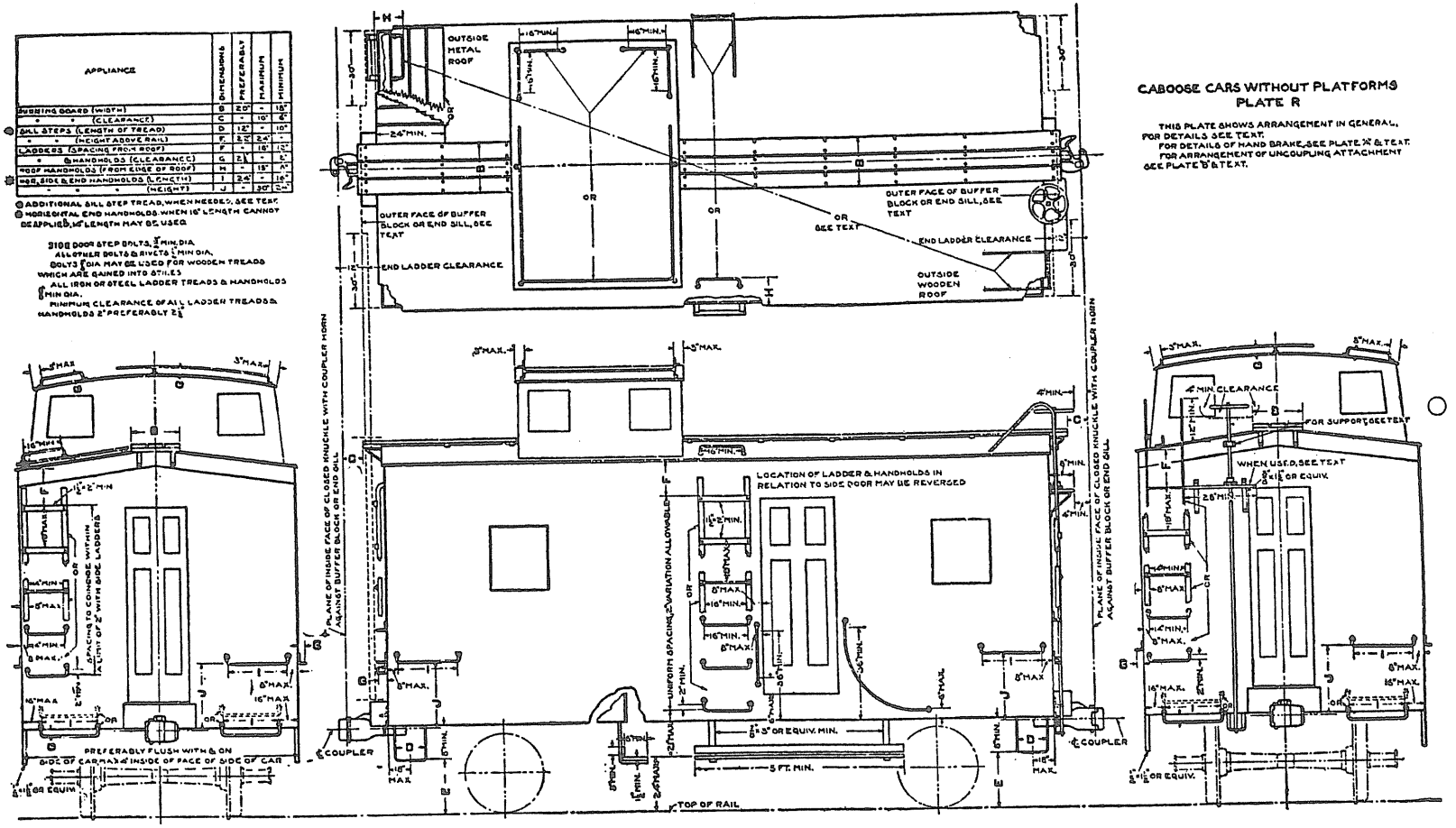

TANK CARS WITHOUT UNDERFRAMES

PLATE S

THIS PLATE SHOWS ARRANGEMENT IN GENERAL, FOR DETAILS SEE TEXT.

FOR DETAILS OF HAND BRAKE SEE PLATE "A" & TEXT.

FOR ARRANGEMENT OF UNCOUPLING ATTACHMENT SEE PLATE "B" AND TEXT.

APPLIANCE	DIMENSIONS	PREFERABLY	MAXIMUM	MINIMUM
SILL STEP (LENGTH OF TREAD)	D	12"	—	10"
" " (HEIGHT ABOVE RAIL)	E	22"	24"	—
LADDERS & HANDHOLDS (CLEARANCE)	G	2½"	—	2"
HOR. SIDE & END HANDHOLDS (LENGTH)	I	24"	—	16"

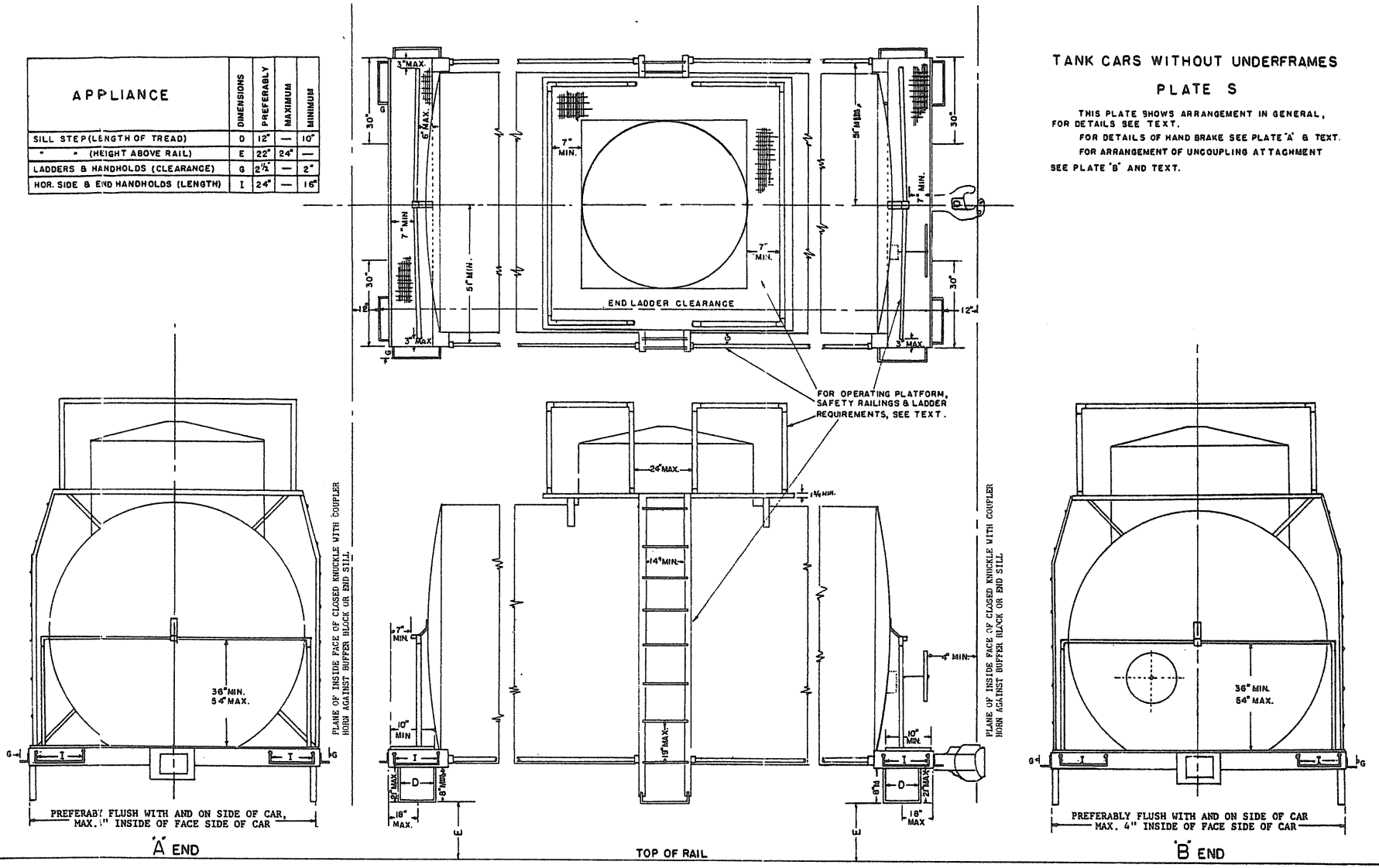

APPLIANCE	DIMENSIONS	PREFERABLY	MAXIMUM	MINIMUM
SILL STEP (LENGTH OF TREAD)	D	12"	—	10"
" " (HEIGHT ABOVE RAIL)	E	22"	24"	—
LADDERS & HANDHOLDS (CLEARANCE)	G	2½"	—	2"
HOR. SIDE & END HANDHOLDS (LENGTH)	I	24"	—	16"

BOX AND OTHER HOUSE CARS WITH ROOFS 16 FEET 10 INCHES OR MORE ABOVE TOP OF RAIL

PLATE T

THIS PLATE SHOWS ARRANGEMENT IN GENERAL, FOR DETAILS SEE TEXT
FOR ARRANGEMENT OF UNCOUPLING ATTACHMENT SEE PLATE "B" & TEXT
FOR STENCILING DETAILS SEE TEXT

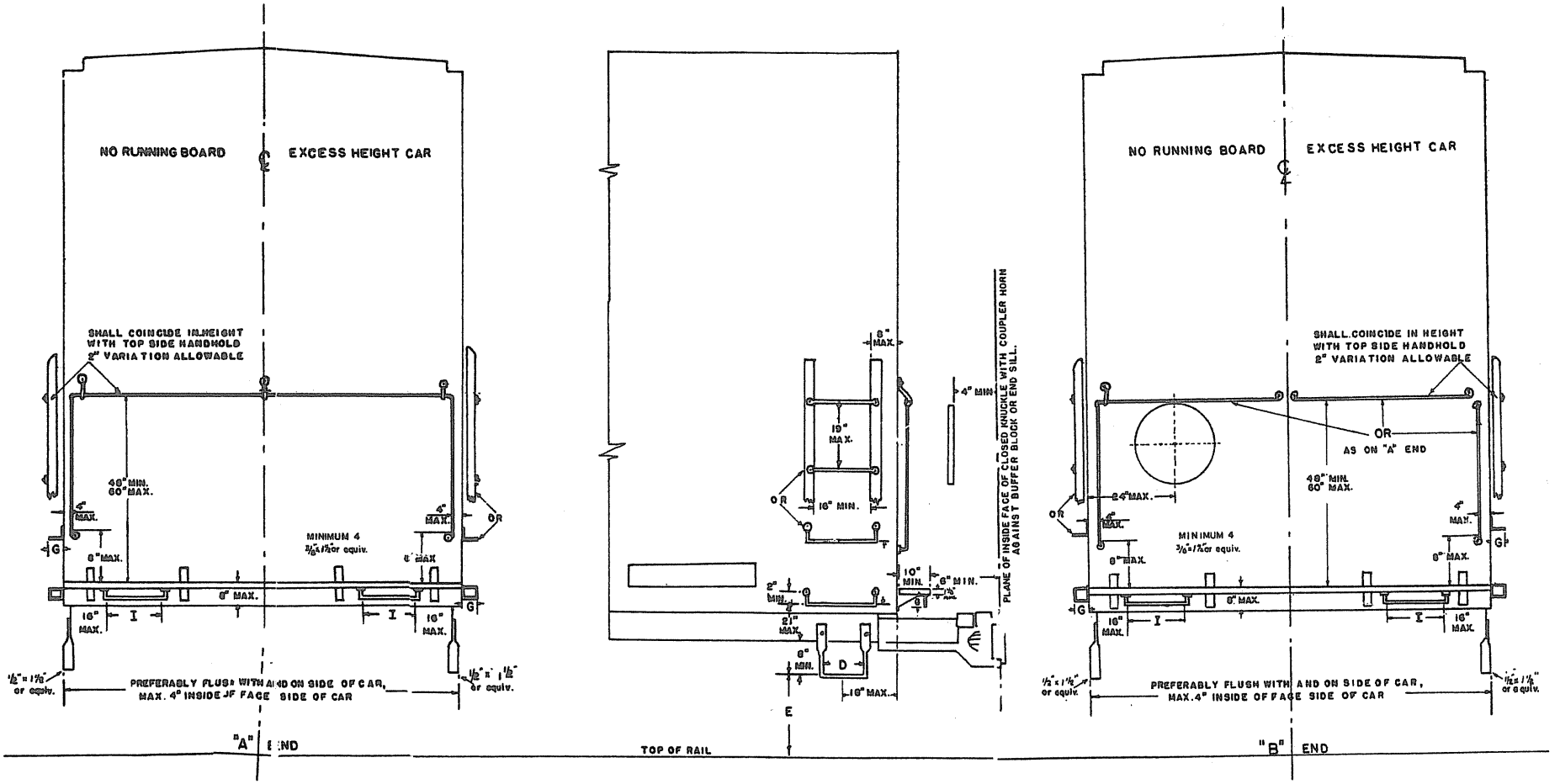

APPLIANCE	DIMENSIONS	PREFERABLY	MAXIMUM	MINIMUM
BRAKE SHAFT	A	—	22"	17"
SILL STEPS (LENGTH OF TREAD)	D	12"	—	10"
" " (HEIGHT ABOVE RAIL)	E	22"	24"	—
LADDERS & HANDHOLDS (CLEARENCE)	G	2½"	—	2"

BOX AND OTHER HOUSE CARS WITHOUT ROOF HATCHES

(DOES NOT INCLUDE CARS WITH ROOFS 16 FEET 10 INCHES OR MORE ABOVE TOP OF RAIL).

PLATE U

THIS PLATE SHOWS ARRANGEMENT IN GENERAL, FOR DETAILS SEE TEXT.

FOR ARRANGEMENT OF UNCOUPLING ATTACHMENT SEE PLATE 'B' AND TEXT.

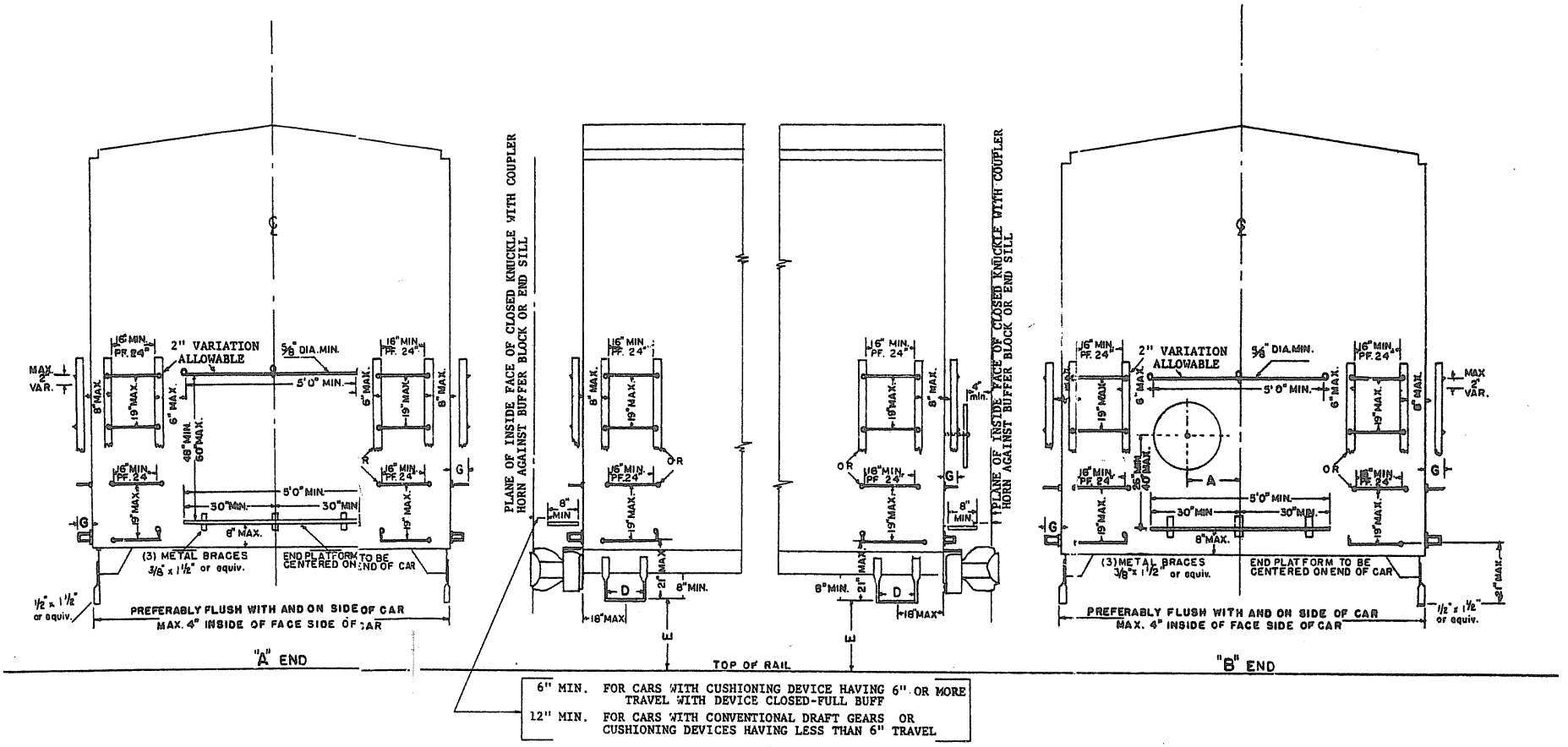

6" MIN. FOR CARS WITH CUSHIONING DEVICE HAVING 6" OR MORE TRAVEL WITH DEVICE CLOSED-FULL BUFF

12" MIN. FOR CARS WITH CONVENTIONAL DRAFT GEARS OR CUSHIONING DEVICES HAVING LESS THAN 6" TRAVEL

BOX AND OTHER HOUSE CARS WITH ROOF HATCHES

PLATE V

THIS PLATE SHOWS ARRANGEMENT IN GENERAL, FOR DETAILS SEE TEXT.

FOR ARRANGEMENT OF UNCOUPLING ATTACHMENT SEE PLATE 8 AND TEXT.

APPLIANCE	DIMENSIONS	PREFERABLY	MAXIMUM	MINIMUM
BRAKE SHAFT	A	—	22"	17"
RUNNING BOARD (WIDTH)	B	20"	—	18"
" " —(CLEARANCE)	C	—	—	6"
SILL STEPS (LENGTH OF TREAD)	D	12"	—	10"
" " (HEIGHT ABOVE RAIL)	E	22"	24"	—
LADDERS (SPACING FROM ROOF)	F	—	18"	12"
" & HANDHOLDS (CLEARANCE)	G	2¼"	—	2"
ROOF HANDHOLDS (FROM EDGE OF ROOF)	H	—	15"	8"

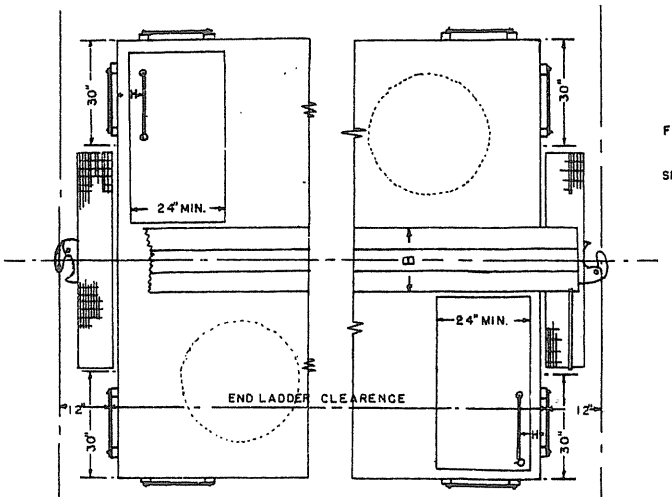

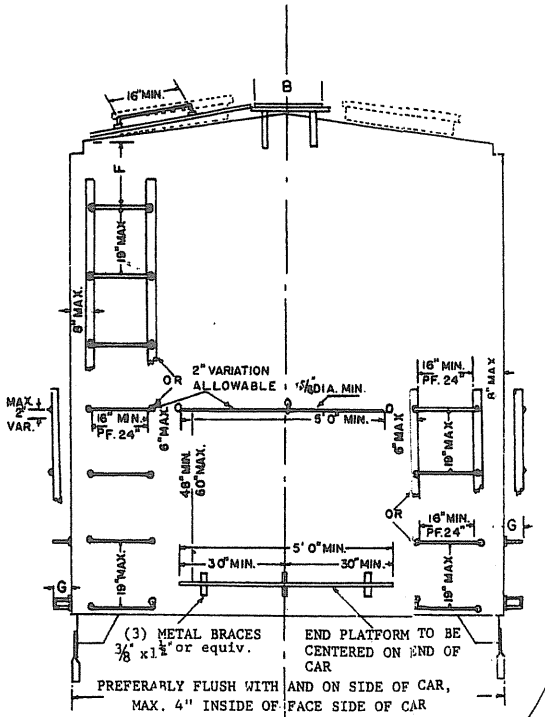

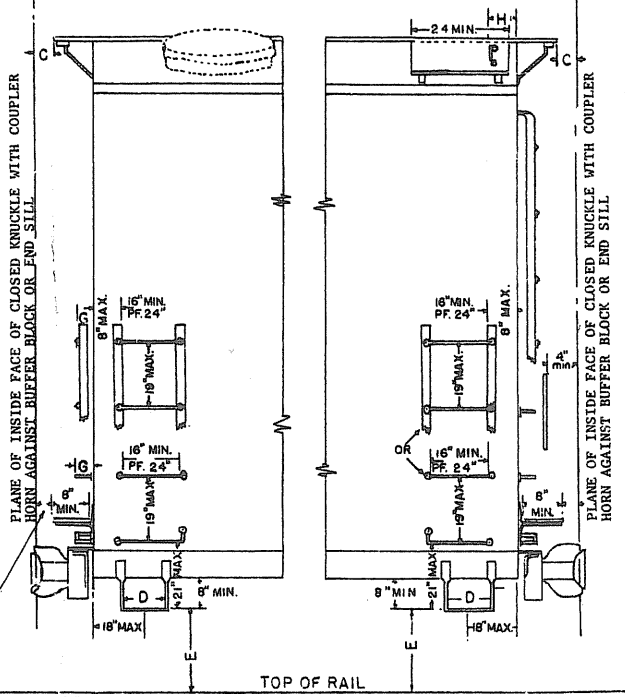

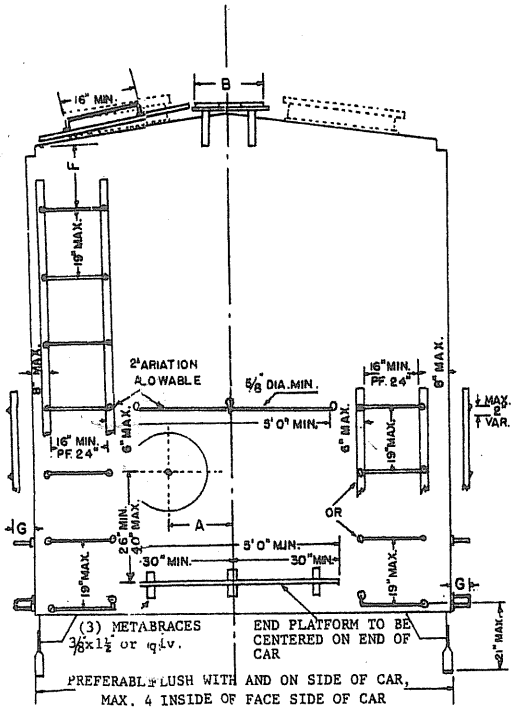

6" MIN. FOR CARS WITH CUSHIONING DEVICE HAVING 6" OR MORE TRAVEL WITH DEVICE CLOSED-FULL BUFF

12" MIN. FOR CARS WITH CONVENTIONAL DRAFT GEARS OR CUSHIONING DEVICE HAVING LESS THAN 6" TRAVEL