federal register

Thursday
July 3, 1997

Part III

Department of Transportation

Federal Railroad Administration

49 CFR Part 213

Track Safety Standards; Miscellaneous Proposed Revisions; Proposed Rule

DEPARTMENT OF TRANSPORTATION

Federal Railroad Administration

49 CFR Part 213

[Docket No. RST–90–1, Notice No. 5]

RIN 2130–AA75

Track Safety Standards; Miscellaneous Proposed Revisions

AGENCY: Federal Railroad Administration (FRA), Department of Transportation (DOT).

ACTION: Notice of Proposed Rulemaking (NPRM).

SUMMARY: FRA proposes to amend the Track Safety Standards in order to update and enhance its track safety regulatory program. These proposed amendments present additional regulatory requirements necessary to address today's railroad operating environment including the introduction of standards specifically addressing high speed train operations. FRA proposes these changes to improve track safety and provide the railroad industry with the flexibility needed to effect a safer and more efficient use of resources. The proposed amendments reflect consensus recommendations submitted to FRA by the Railroad Safety Advisory Committee.

DATES: *Written comments:* Written comments must be received before September 15, 1997. Comments received after that date will be considered to the extent possible without incurring additional expense or delay.

Public hearing: A public hearing will be held in Washington, D.C. to allow interested parties the opportunity to comment on specific issues addressed in the NPRM. FRA will announce at a later date in this publication the date and location of the hearing.

ADDRESSES: *Written comments:* Comments should identify the docket number and the notice number and should be submitted in triplicate to: Docket Clerk, Office of Chief Counsel, Federal Railroad Administration, 400 Seventh Street, S.W., Mail Stop 10, Washington, D.C. 20590. Persons desiring to be notified that their written comments have been received by FRA should include with their comments a stamped, self-addressed postcard. The Docket Clerk will indicate on the postcard the date on which the comments were received and will return the card to the addressee. Written comments will be available for examination during regular business hours in Room 7051 of FRA headquarters at 1120 Vermont Avenue, N.W., Washington, D.C.

Public hearing: The date and location of the public hearing will be announced at a later date in this publication.

FOR FURTHER INFORMATION CONTACT: Allison H. MacDowell, Office of Safety Enforcement, Federal Railroad Administration, 400 Seventh Street, S.W., Mail Stop 25, Washington, D.C. 20590 (telephone: 202–632–3344), or Nancy Lummen Lewis, Office of Chief Counsel, Federal Railroad Administration, 400 Seventh Street, S.W., Mail Stop 10, Washington, D.C. 20590 (telephone: 202–632–3174).

SUPPLEMENTARY INFORMATION:

Introductory Statement

The text of the following proposed rule was recommended to FRA by the agency's Rail Safety Advisory Committee (RSAC), a standing committee composed of 48 representatives of the rail industry, rail labor and other interested parties, as well as FRA. The committee is tasked by the Federal Railroad Administrator (the Administrator) to formulate and present to FRA recommendations for new regulations and revisions of existing ones. The committee operates under a set of procedures provided to and discussed with all its members when the RSAC was first established.

In accordance with the procedures, the specific provisions of the proposed rule were developed by the Track Working Group, a subcommittee of the RSAC, which met periodically over a span of six months in 1996 to discuss track safety issues, developments in the industry, and possible solutions to current safety challenges. Each provision contained in the proposed rule received unanimous approval by the members of the Track Working Group, which included approximately 30 representatives from railroads, rail labor, trade associations, state government, track equipment manufacturers, and FRA. Such consensus is required by RSAC procedures before a proposal can be presented to the RSAC for consideration.

On October 18, 1996, all RSAC members were provided copies of the Track Working Group's proposed rule for review. At a public meeting on October 31, 1996, the Track Working Group presented its proposed rule to the RSAC for approval to recommend it to the Administrator. After discussion, the RSAC agreed, at the request of the Brotherhood of Maintenance of Way Employes (BMWE), to defer the vote on whether to recommend the proposed rule to the Administrator to provide that organization additional time to inform its members. The RSAC conducted a formal vote by mail on November 21, 1996. At that time, representatives of many of the labor unions withdrew support of the proposed rule and recommended that it be returned to the Track Working Group for further discussion.

Despite the lack of support by many RSAC representatives of rail labor, the number of votes cast in favor of recommending the proposed rule to the Administrator exceeded the number necessary for a simple majority. RSAC's procedures provide that where there is a majority vote to recommend to the Administrator a rule presented to the RSAC with full consensus of the working group that produced it, the RSAC will recommend adoption of the rule by the Administrator. Following those procedures, the RSAC formally recommended to the Administrator that FRA issue the proposed rule as it was drafted. The following proposed rule is the same rule text and preamble developed by the Track Working Group. However, the regulatory evaluation for the proposed rule varies somewhat from that submitted by the Track Working Group.

The cost/benefit evaluation of a proposed rule that enjoys unanimous support by all of the affected parties may contain assumptions which would not be appropriate for an analysis of a proposed rule that receives less than unanimous support. For example, unanimous support makes it easier to assume that costs are justified by benefits where they may be difficult to quantify. The Track Working Group submitted to the RSAC its proposed rule and cost/benefit analysis as it was approved by the group with unanimous consensus. As noted above, however, in the RSAC vote, members who represent almost entirely one definable segment of the rail industry voted to recommend that the proposed rule be returned to the working group for additional work. While the Track Working Group's proposed rule received majority consensus in the RSAC, its cost/benefit analysis was based on a premise that it would receive unanimous consensus.

In acknowledgment of the change in assumptions, FRA has attempted to incorporate additional data in the cost/benefit analysis that has been placed in the docket. The analysis cannot answer some important questions with the limited data now available. FRA requests that parties who have access to this data submit them to FRA during the comment period for this notice.

Specifically, FRA requests the following additional information:

- What nonreportable accidents occur on excepted track? How many are there by category and what do they cost? How much excepted track does not comply with the proposed gage standard, and how much will it cost to bring it into compliance?
- What accidents have been caused by the use of personnel not qualified under § 213.7 to move trains over defective track? How many are there by category and what do they cost? Have any accidents been caused by qualified personnel who have not received requalification training? How many are there by category and what do they cost?
- What accidents have been caused by torch-cut bolt holes in Class 2 track? How many are there by category and what do they cost?
- What accidents have been caused by torch-cut rails or joint bars reconfigured by torch cutting? How many are there by category and what do they cost?
- How many miles of track, by class would not comply with the proposed crosstie standard, and how much will it cost to bring them into compliance?
- What accidents have been caused by failure to operate a switch during inspections? How many are there by category and what do they cost?
- What accidents have been caused by inadequate inspection where the inspection involved inspection of multiple tracks from a hi-rail vehicle? How many are there by category and what do they cost?
- What other data do you have concerning the areas addressed by the benefit/cost analysis?

Information pertaining to these subjects should be submitted to the Docket Clerk, Office of Chief Counsel, Federal Railroad Administration, 400 Seventh Street, S.W., Mail Stop 10, Washington, D.C. 20590.

With this notice, FRA proposes to revise the Track Safety Standards, 49 C.F.R. Part 213, using the proposed rule developed by the Track Working Group and recommended by majority consensus by the RSAC, including the preamble and the cost/benefit evaluation as modified by FRA. The proposed rule is as follows:

I. Statutory Background

The Rail Safety Enforcement and Review Act of 1992, Public Law 102–365,106 Stat. 972 (September 3, 1992), later amended by the Federal Railroad Safety Authorization Act of 1994, Public Law 103–440, 108 Stat. 4615 (November 2, 1994), requires FRA to revise the track safety regulations contained in 49 CFR Part 213. Now codified at 49 U.S.C. § 20142, the amended statute requires:

''(a) Review of Existing Regulations.—Not later than March 3, 1993, the Secretary of Transportation shall begin a review of Department of Transportation regulations related to track safety standards. The review at least shall include an evaluation of—

(1) procedures associated with maintaining and installing continuous welded rail and its attendant structure, including cold weather installation procedures;

(2) the need for revisions to regulations on track excepted from track safety standards; and

(3) employee safety.

(b) Revision of Regulations.—Not later than September 1, 1995, the Secretary shall prescribe regulations and issue orders to revise track safety standards, considering safety information presented during the review under subsection (a) of this section and the report of the Comptroller General submitted under subsection (c) of this section.

* * * * *

(d) Identification of Internal Rail Defects.—In carrying out subsections (a) and (b), the Secretary shall consider whether or not to prescribe regulations and issue orders concerning—

(1) inspection procedures to identify internal rail defects, before they reach imminent failure size, in rail that has significant shelling; and

(2) any specific actions that should be taken when a rail surface condition, such as shelling, prevents the identification of internal defects.''

II. Regulatory Background

The first Federal Track Safety Standards were implemented in October, 1971, following the enactment of the Federal Railroad Safety Act of 1970 in which Congress granted to FRA comprehensive authority over ''all areas of railroad safety.'' See 36 FR 20336 and 49 U.S.C. 20101 *et seq.* FRA envisioned the new standards to be an evolving set of safety requirements subject to continuous revision allowing the regulations to keep pace with industry innovations and agency research and development.

FRA amended the Track Safety Standards with minor revisions several times in the past two decades. It began a project to revise the standards extensively in 1978, but later withdrew the effort when investigation revealed that considerably more data collection and analysis were necessary to support recommended revisions. A less extensive revision of the Track Safety Standards was issued in November, 1982. Since then, FRA has acquired much information crucial to further development of the Track Safety Standards through the enhanced statistical analysis capabilities resulting from additional field reporting requirements and improved data collection processes.

III. Petitions for Rulemaking

In May, 1990, the Brotherhood of Maintenance of Way Employees (BMWE) filed a petition with FRA to revise the Track Safety Standards. The petition suggested substantive changes to the standards, the addition of new regulations addressing recent developments in the industry, as well as the reinstatement of many of the regulations deleted from the standards in 1982. The BMWE also petitioned FRA to further address employee safety by incorporating in the Track Safety Standards certain sections of the Occupational Safety and Health Standards presently administered by the U.S. Department of Labor.

In March, 1992, the Association of American Railroads (AAR) submitted to FRA a list of recommended revisions to the Track Safety Standards. The AAR suggested some changes in the wording of existing regulations to provide additional flexibility to accommodate future innovations in railroad technology. Several suggested revisions included new approaches to determining compliance with certain existing regulations. Most notable among those was AAR's proposal that the revised track standards permit the use of a Gage Restraint Measuring System (GRMS) in place of detailed crosstie and fastener requirements. Lengthy discussions within the Track Working Group failed to result in any agreement about that proposal, and the RSAC postponed making a recommendation about the use of GRMS. On the other hand, RSAC recommended that railroads develop individual programs for installation and maintenance of continuous welded rail (CWR), provided those programs meet certain minimum criteria.

IV. Proceedings to Date

On November 16, 1992, FRA published an Advance Notice of Proposed Rulemaking (ANPRM) in this docket. See 57 FR 54038. The ANPRM summarized FRA's knowledge about developments in the rail industry in the past two decades and then posed some 52 questions regarding how those developments should be addressed in the revised track safety standards.

The ANPRM also announced plans for four public workshops in which

technically-knowledgeable persons with specialized experience in track maintenance were invited to share their views with FRA in an informal setting. The workshops were fact-finding sessions comprised of informal give-and-take exchanges between industry, labor, and government professionals charged with the administration of the track safety standards on a day-to-day basis. They comprised an initial step by FRA to use more active collaboration with labor, railroad management, manufacturers, state governments, and public interest associations in structuring the revised regulations.

The first workshop, held in Newark, New Jersey, on January 26, 1993, addressed such topics as responsibility of track owners, inspection qualifications, restoration/renewal of track, and the 30-day period in § 213.9. A second workshop in Atlanta, Georgia, on January 28, 1993, covered such subjects as lateral track resistance, gage restraint measurement, and vehicle track interaction. In the third workshop held in Denver, Colorado, on February 23, 1993, topics discussed were defective rails/remedial action, internal rail inspection frequency, system tolerances and reliability, and torch cut rail. The fourth workshop, a two-day session in Washington, D.C. on March 30–31, 1993, covered such items of interest as excepted track, inspection requirements, definitions, and the safety of maintenance-of-way employees.

Participants in the workshops included representatives of major and short line railroads, the AAR, the American Short Line Railroad Association, the BMWE, as well as individuals with a particular interest in certain areas of the track safety standards. In addition to the workshops, FRA invited interested persons to submit written comments to the questions posed in the ANPRM. Approximately 30 individuals, railroads, and industry groups submitted their suggestions and observations.

Following the workshop in Washington, which included an extensive discussion about the safety of maintenance-of-way employees, FRA decided to isolate that issue from this proceeding so that it could be addressed thoroughly in a separate rulemaking. That issue became the focus of a proceeding addressing roadway worker safety, FRA's first negotiated rulemaking. FRA established its first formal regulatory negotiation committee in 1994. After months of discussions and debates, the committee reached consensus conclusions and recommended provisions for an NPRM to the Federal Railroad Administrator on May 17, 1995. An NPRM based upon those recommendations was published on March 14, 1996 (see 61 FR 10528), and a final rule was issued on December 6, 1996 (see 61 FR 65959).

V. The Railroad Safety Advisory Committee

In past rulemakings, interested parties generally have approached the proceedings in an adversarial manner, a tactic that often inhibited the development of the best regulatory solutions to resolve difficult safety issues. In addition, parties also have resorted to pressuring Congress for legislation that would grant regulatory results with which FRA disagreed or were at odds with FRA's regulatory agenda. FRA concluded, therefore, that inclusion of these parties in its regulatory process would result in a more positive approach to developing the best solutions to pressing safety problems.

Although FRA gathered much information in the 1993 track workshops, as well as in similar workshops associated with other rulemaking proceedings, the agency recognized that continued use of these ''ad hoc'' collaborative procedures for each rulemaking was not the most effective means of accomplishing the agency's goal of achieving a more consensual regulatory program. Following the success in 1995 of the negotiated rulemaking addressing roadway worker safety, FRA decided that several pending rulemakings, including this proceeding to revise Part 213, should advance under a new rulemaking model that relies upon consensus among various members of the affected industry and the regulated community. On March 11, 1996, FRA announced formation of the Railroad Safety Advisory Committee (RSAC), the centerpiece of the agency's new regulatory program which emphasizes rulemaking by consensus with those most affected by the agency's regulations. See 61 FR 740.

The RSAC is comprised of 48 individual representatives drawn from 27 member organizations. The membership of the RSAC is representative of those interested in railroad safety issues, including railroad owners, manufacturers, labor groups, state government groups, and public interest associations. Its sponsor is the Federal Railroad Administrator, who recommends specific issues for it to address. The RSAC operates by consensus. It is authorized to establish smaller ''working groups'' to research and initially address the issues recommended by the Federal Railroad Administrator and accepted by the RSAC to resolve.

VI. Track Working Group

On April 2, 1996, the RSAC agreed to provide advice and recommendations to FRA for revision of the Track Safety Standards in 49 CFR Part 213. The RSAC then assigned that responsibility to a specialized working group comprised of approximately 30 representatives from labor, railroads, trade associations, state government groups, track equipment manufacturers, and FRA.

The Track Working Group met monthly from May, 1996, through October, 1996, to develop a draft NPRM to recommend to the RSAC. Minutes taken at each of the meetings are part of the docket for this rulemaking. The provisions contained in this document largely reflect the work accomplished by that group.

The Track Working Group identified issues for discussion from several sources. One source of issues was, of course, the statutory mandates issued by Congress in 1992 and in 1994. Several issues came to the Track Working Group by way of requests for consideration made by FRA's track safety Technical Resolution Committee. The group also examined track issues involved in a number of recommendations made to FRA by the National Transportation Safety Board (NTSB) in the past decade. Discussions utilized information acquired by FRA through its research and development program, as well as from findings from routine agency investigations and accident investigations. Finally, the Track Working Group systematically surveyed the existing regulations to identify those sections and subsections that needed updating or, in some cases, deletion.

Many of the issues engendered much discussion and debate within the Track Working Group. Brief summaries of those discussions are recorded in the appropriate parts of the section-by-section analysis portion of this document. Technical details supporting certain recommendations are not specified in this notice but are recorded in the docket and were discussed by the Track Working Group. A few issues have been designated by FRA to be ''major issues'' and are more fully discussed in the following section.

V. Major Issues

This section contains FRA's analysis of a number of significant issues that arose in this rulemaking. The analysis is based upon (1) discussions by the Working Group and RSAC; (2)

comments, both oral and written, received by the agency following publication of the ANPRM; (3) past statements of agency policies; (4) legal research; and (5) agency compliance experience.

A. Continuous Welded Rail (CWR)

In the first track safety standards published in 1971, § 213.119 dealt with CWR in a rather general manner, stating simply that CWR must be installed at a rail temperature that prevents lateral displacement of track or pull-aparts of rail ends, and that it should not be disturbed at rail temperatures higher than the installation or adjusted installation temperature. (See 36 FR 20341.) In 1979, when FRA proposed a significant revision of Part 213, the agency suggested that this subsection be eliminated because it provided ''little guidance to railroads'' and was ''difficult to enforce.'' The agency further stated that research had ''not advanced to the point where specific safety requirements can be established.'' (See 44 FR 52114.) However, when the proposed revision was withdrawn in 1981 (see 46 FR 32896), the proposal to eliminate § 213.119 was also abandoned. In the November, 1982 revisions to the Track Safety Standards § 213.119 was deleted.

In the Rail Safety Enforcement and Review Act of 1992, Congress mandated FRA to evaluate procedures for installing and maintaining CWR. In 1994, in the Federal Railroad Authorization Act, Congress added an evaluation of cold weather installation procedures to that mandate. Following evaluation of those procedures, FRA proposes to return CWR procedures to Part 213.

CWR is naturally subjected to high compressive and tensile forces which, if not adequately restrained, can result in track buckling or pull-aparts. The potential for track buckling increases as the ambient air temperature increases while the potential for pull-aparts increases as the ambient air temperature decreases. Track buckling tends to occur under train movement and therefore can be instantaneous and somewhat unpredictable.

In recent years, FRA engaged in a research program to develop criteria and guidelines for improving CWR's resistance to buckling. The program sought to (1) define critical forces and conditions associated with track buckling, (2) quantify parameters which govern the resistance of track to buckling, and (3) develop technology to detect incipient failures prior to track buckling. Railroads have also invested considerable resources into CWR research and employee training which has resulted in a marked decrease in the number of reportable buckled track incidents over the last decade. FRA's Accident/Incident data base reveals that the number of reportable buckled track derailments has been reduced by approximately 50% since 1985, dropping from a yearly average of approximately 60 instances to approximately 30 such occurrences per year.

How a railroad provides the adequate lateral resistance to prevent track buckling may vary from railroad to railroad. The Track Working Group found that consistent methodology is not as important as effective methodology in installing and maintaining CWR. Therefore, the Track Working Group's recommendations are premised on the concept that the regulations should provide railroads with as much flexibility as safely feasible. The proposed standard, contained in a new subsection (§ 213.119), allows railroads to develop and implement their individual CWR programs based on procedures which have proven effective for them over the years. At a minimum, procedures shall be developed for the installation, adjustment, maintenance, and inspection of CWR, as well as a training program and minimal requirements for recordkeeping. FRA proposes to monitor the railroads adherence to these procedures as well as the overall effectiveness of the CWR programs.

B. Excepted Track

With some limitations, the current regulation permits railroads to designate track as ''excepted'' from compliance with minimum safety requirements for roadbed, track geometry and track structure. This provision was intended to allow for limited periods of operation over track that was scheduled for abandonment or later improvement, and to permit operations over low density branch lines and related yard tracks in areas where it is highly unlikely that a derailment would endanger persons along the right-of-way. In general, the purpose of this provision has been realized.

However, the excepted track provision was not tightly drawn when added in 1982. Critics of the present provision argue that it permits tolerance of unsafe track conditions. For instance, trackage designated as ''excepted'' sometimes traverses residential areas or exists within close proximity to major population centers, and hazardous materials frequently are moved over these tracks with some regularity.

FRA added the excepted track provision (§ 213.4) to the regulations in response to an industry outcry for regulatory relief on those rail lines producing little or no income. FRA believed that without some relief for low density lines, railroads would accelerate abandonment of those lines rather than invest their slim resources where returns would be limited. Therefore, the 1982 revision provided the industry with a means to operate over designated tracks without complying with the substantive requirements of the Track Safety Standards. FRA believed that the designated tracks would be located on comparatively level terrain in areas where the likelihood was remote that a derailment would endanger a train crew or the general public.

The current provision contains a number of operating restrictions, including limitations on where excepted track can be located and the number of cars containing hazardous materials (five) that can be hauled in one train. Maximum speed is 10 m.p.h., and passenger service is prohibited.

Despite these limitations, railroads have embraced the concept of excepted track. In 1992, an FRA survey revealed the existence of approximately 12,000 miles of designated excepted track nationwide, far more than FRA envisioned when the provision was added to the regulations. Recent surveys conducted by the AAR and ASLRA, which were distributed to the Working Group members, currently indicate that between 8,000 and 9,000 miles of excepted track presently exists nationwide. FRA inspectors frequently find that railroads' legal use of the excepted track provision is far from the provision's original intent and purpose.

Comments given in response to the ANPRM, as well as some opinions expressed within the Track Working Group, demonstrate that many railroads favor maintaining an excepted track provision in the Track Safety Standards. They argue that accident and injury data do not support the notion that trackage in ''excepted'' status presents any significant safety hazard. Short line railroads strenuously argue that they depend on the provision in order to keep certain track segments in business. Many short lines operate over track they acquired just before abandonment by a major railroad. A significant number of those lines serve only a handful of industries with comparatively small gross tonnage. Eliminating the excepted track provision may result in the demise of service to many short line railroad shippers, thus prompting an increase in

rail traffic switching to highway transportation.

Others, however, favor abolishing the excepted track provision because they believe it promotes tolerance of poor maintenance practices and hazardous track conditions. Approximately 65% of all reportable derailments on excepted track from 1988 through the third quarter of 1995 were track-caused. Of this total, nearly 33% were attributed to wide gage as a result of defective crossties or rail fasteners. FRA and state inspectors have found instances where railroads have taken advantage of the permissive language in the section to conduct operations in a manner not envisioned by the drafters of the provision. For example, a railroad removes a segment of track from the excepted designation only long enough to move a train with more than five cars carrying hazardous materials, or to operate an excursion passenger train, and then replaces the segment in excepted status as soon as the movement is completed. However, FRA's enforcement policies and railroad compliance have reduced these instances.

For those reasons, the Track Working Group advised that the excepted track provision be retained with certain new restrictions. Significant revision proposed for § 213.4 includes a new requirement that the track owner must maintain gage to a 58¼″ standard, perform periodic switch inspections, and provide FRA with notification 10 days prior to removing track from excepted status. The revision also proposes to change the word ''revenue'' to ''occupied'' in describing passenger trains prohibited from operating over excepted track.

C. Liability Standard

The current track regulations are enforced against a track owner ''who knows or has notice'' that the track does not meet compliance standards. This knowledge standard is unique to the track regulations; other FRA regulations are based on strict liability. The knowledge standard is founded on the notion that railroads should not be held responsible for defects that may occur suddenly in remote locations. Today, after years of track abandonments by major railroads, the industry is responsible for maintaining about 200,000 miles of track. Many defects occur suddenly in remote areas, making it difficult for even the most diligent track inspectors to keep pace with all defects as they happen.

With a knowledge standard attached to the track regulations, railroads are held liable for non-compliance or civil penalties for only those defects that they knew about or those that are so evident the railroad is deemed to have known about them. FRA and state inspectors meet this knowledge standard in a number of ways. Sometimes they record and notify a railroad of a defect that they find, and then re-inspect 30 days later to see if the defect has been repaired. If it has not, they cite the railroad for a violation of the track safety standards. While this method provides a failsafe way of proving railroad notice of a defect, it is not always practicable for inspectors to perform follow-up inspections 30 days later.

Often, inspectors choose to inspect the railroad's own inspection records to see if a defect they have noted is recorded there. If it is, the inspection record forms proof that the railroad had notice of the defect. If the defect is not recorded in the railroad's inspection records, but is of the nature that it would have had to exist at the time of the railroad's last inspection (for example, defective crossties or certain breaks that are covered with rust), the defect's existence constitutes constructive knowledge by the railroad and the railroad is cited for a violation. Although these inspection methods are not enunciated in the regulations themselves, they reflect long-standing FRA enforcement policy and are explained in FRA's Track Enforcement Manual.

In its petition, the BMWE suggested that FRA put track owners under strict liability standard by removing the phrase ''knows or has notice'' from § 213.5. Under that standard, any defect found by an FRA inspector could be written as a violation regardless of the railroad's ignorance of it. The AAR requested in its petition that FRA develop performance standards for the track regulations. Certain defects would not be cited as long as the track is performing safely, making unnecessary many of the regulations (for example, inspection requirements and the minimum number of crossties). Neither the BMWE nor the AAR provided FRA with cost/benefit information to support their respective requests.

This notice proposes to adopt the recommendation by the Track Working Group and the RSAC to leave the standard of liability unchanged as the best balance of all interests. Railroads will continue to be held liable for track defects of which they knew or had notice. Notice may include constructive knowledge of defects that, by their nature, would have had to be in existence when the railroad was last required to perform an inspection.

D. Plant Railroads and Industrial Spurs

FRA has elected not to exercise jurisdiction over the safety of railroads that conduct their operations exclusively within an industrial or military installation. Such operations have not demonstrated the same degree and frequency of track problems found on tracks in the general system which are subject to heavier tonnages and more frequent use. Nevertheless, FRA recognizes its responsibility for the safety of railroad employees and operations inside such facilities where a general system railroad provides service on that property, either by picking up and placing cars for transportation in interstate commerce or by switching for the plant. The same responsibility applies to operations on privately owned industrial spurs used exclusively by a main line railroad to serve an industry.

The applicability section of the current Track Safety Standards (§ 213.3) excludes track ''located inside an installation which is not part of the general railroad system of transportation.'' This broad statement implies that the track standards do not apply anywhere inside a plant, regardless of who operates there or the type of operations that occur on the plant track. However, § 213.3 must be read in conjunction with 49 CFR Part 209, Appendix A, which explains that any plant railroad trackage over which a general system railroad operates becomes subject to FRA regulations. With the entrance of a general system railroad, the plant loses its insularity.

Since the enactment of the Federal Railroad Safety Act of 1970, FRA has had at its disposal statutory authority to issue emergency orders to repair or discontinue use of industrial or plant trackage should the agency find that conditions of the track pose a hazard of death or injury. See 49 U.S.C. § 20901. It is FRA's opinion that this emergency order authority is sufficient power to ensure track safety within plants or installations. However, if conditions or events in the future tend to demonstrate that track safety within plants or installations should be more specifically regulated, FRA will seek to change the applicability of this Part in a future rulemaking. This notice proposes to leave the application section of the Track Safety Standards unchanged.

E. Tourist Railroads

Congress granted FRA authority over all railroads, including tourist railroads, in 1970 when it enacted the Railroad Safety Act, now codified at 49 U.S.C. § 20102 *et seq.* In the 1970's and early

1980's, tourist railroads were few in number, and the agency decided to direct its manpower and resources towards ensuring safety on the freight carriers and major passenger lines. As the 1980's progressed, FRA began to witness a proliferation of tourist operations ranging in description from very small operations carrying only a handful of passengers a few days every year to large operations transporting hundreds of passengers daily. Many are financially constrained and dependent on volunteer labor, but others garner significant revenues from transportation of thousands of riders. The tourist railroad industry itself estimates that such railroads carry four to five million passengers each year.

In 1992, FRA developed a policy for exercise of agency jurisdiction over tourist railroads. The policy provides that FRA will exercise jurisdiction over all tourist railroad operations except those that are less than 24 inches in gage and/or insular. An insular tourist railroad is one where operations are limited to a separate enclave in such a way that they engender no reasonable expectation that the safety of any member of the public (except a business guest, a licensee or affiliated entity, or a trespasser) would be affected. An insular railroad cannot have a public highway-rail crossing in use, an at-grade rail crossing in use, a bridge over a public road or commercially navigable waters, or a common corridor of 30 feet or less with another railroad.

The current Track Safety Standards apply only to those tourist railroads that operate on the general system. Nevertheless, the Track Safety Standards serve as benchmarks for evaluating the safety of trackage off the general system.

In 1992, the Berkshire Scenic Railway Museum of Lenox, Massachusetts, petitioned FRA to conduct a special proceeding on all safety issues related to tourist railroads, suggesting that FRA phase in Class 1 track standards for those non-general system properties to which the standards do not currently apply. FRA denied the petition for a special proceeding because of the agency's many rulemaking commitments. However, FRA indicated a willingness to consider suggestions for modification of safety standards for tourist railroads within rulemaking proceedings already planned or underway.

In 1994, representatives of the tourist railroad industry proposed to Congress that it amend certain parts of 45 U.S.C. § 431, now recodified at 49 U.S.C. §§ 20101–20103, wherein FRA, through the Secretary of Transportation, is granted plenary authority over the safety of all railroads. The proposed legislation would have excluded tourist railroads from Federal safety laws even if they operate over the general system, as long as they do not ''interchange traffic'' with the general system. Thus, an unregulated tourist train could operate on the same track as a freight train, Amtrak, or commuter railroad. Congress agreed that such a change would not be wise safety policy. However, Congress also recognized that tourist railroads sometimes have unique characteristics that affect how they comply with Federal safety laws. Therefore, in enacting the Federal Railroad Safety Authorization Act of 1994, Congress instructed FRA to consider ''factors that may be unique'' to tourist railroads when prescribing safety regulations that would apply to those railroads. See 49 U.S.C. § 20103. Of course, FRA had already made an informal commitment to the industry to consider their unique factors in ongoing and future rulemakings.

FRA estimates that approximately 95 tourist railroads operating over 1,350 miles of standard gage track off the general system are not currently subject to the track safety standards. FRA sees the need to address this growing market and increasing safety exposure in the area of track safety, as well as other areas of rail operation. In April, 1996, the agency referred tourist railroad safety issues to the RSAC. The RSAC, in turn, established a working group comprised of agency and tourist railroad industry representatives to analyze the industry's unique aspects and formulate recommendations for appropriate regulation of that specialized industry. Because this working group will investigate and examine issues of track safety on tourist railroads, the Track Working Group decided not to discuss the subject. If the Tourist Railroad Working Group sees the need to propose changes to Part 213 to accommodate that industry, it will recommend to RSAC that FRA initiate a separate rulemaking to address those issues. Therefore, this notice proposes no changes to the Track Safety Standards that are directed specifically to tourist railroads.

F. Train Speed/Preemption

Under the current Track Safety Standards, FRA has only an indirect role in determining speed limits. Railroads set train speed in their timetables or train orders. Once a railroad sets a train speed, it must then maintain the track according to FRA standards for the class of track that corresponds to that train speed. The signal and train control regulations also fix limits on train speed based upon the type of signal system that is in place. If the railroad fails to comply with track or signal system requirements for speed at which trains are operated, the railroad is subject to penalty.

FRA's current regulations governing train speed do not afford any adjustment of train speeds in urban settings or at grade crossings. This omission is intentional. FRA believes that locally established speed limits may result in hundreds of individual speed restrictions along a train's route, causing train delays and increasing safety hazards. The safest train maintains a steady speed. Every time a train must slow down and then speed up, safety hazards, such as buff and draft forces, are introduced. These kinds of forces can enhance the chance of derailment with its attendant risk of injury to employees, the traveling public, and surrounding communities.

FRA always has contended that Federal regulations preempt any local speed restrictions on trains. Section 20106 of Title 49, United States Code (formerly 45 U.S.C. § 434) declares that—

''[l]aws, regulations, and orders related to railroad safety shall be nationally uniform to the extent practicable. A State may adopt or continue in force an additional or more stringent law, regulation, or order related to railroad safety when the law, regulation, or order—(1) is necessary to eliminate or reduce an essentially local safety hazard; (2) is not incompatible with a law, regulation, or order of the United States Government; and (3) does not unreasonable burden interstate commerce.''

FRA's long-held belief that Part 213 preempts local speed laws was verified by the U.S. Supreme Court in 1993 in the case *CSX* v. *Easterwood*, 507 U.S. 658 (1993). The Court held that legal duties imposed on railroads by a state's common law of negligence fall within the scope of preemption provision of 49 U.S.C. 20106, which preempts any state ''law, rule, regulation, order or standard relating to railroad safety.'' The Court said that preemption of such state laws ''will lie only if the federal regulations substantially subsume the subject matter of the relevant state law.'' *Easterwood*, 664. However, the Court further stated that because Part 213 ties certain track requirements to train speed, it should be viewed as ''covering the subject matter'' of speed limits.

Notwithstanding some of the language in *Easterwood* that a cursory reading may otherwise indicate, FRA has never

assumed the task of setting train speed. Rather, the agency holds railroads responsible for minimizing the risk of derailment by properly maintaining track for the speed they set themselves. For example, if a railroad wants its freight trains to operate at 59 m.p.h. between two certain locations, it must maintain the tracks between those locations to Class 4 standards.

In recent years, FRA has encountered increasing pressure from communities along railroad rights-of-way to set slower train speeds on main tracks located in urban areas. They typically cite the inherent dangers of grade crossings, as well as the risk of derailments of rail cars containing hazardous materials.

As to grade crossings, FRA has consistently maintained that their danger is a separate issue from train speed. The physical properties of a moving train virtually always prevent it from stopping in time to avoid hitting an object on the tracks regardless of the speed at which the train is traveling. Prevention of grade crossing accidents is more effectively achieved through the use of adequate crossing protection and through observance by the driving public of crossing restrictions and precautions. Therefore, FRA continues to sponsor and/or support initiatives to improve safety at grade crossings under the Department of Transportation's Grade Crossing Action Plan. These initiatives are geared towards enhancing enforcement of traffic laws at crossings, closing unneeded crossings, enhancing rail corridor crossing reviews and improvements, expanding public education and Operation Lifesaver activities, increasing safety at private crossings, improving data and research efforts, and preventing rail trespassing.

In January, 1995, FRA implemented regulations for maintenance, inspection and testing of warning devices at crossings, such as lights and gates. See 59 FR 50086. The agency also implemented regulations requiring certain locomotives to be equipped with auxiliary lights making trains more visible to motorists, railroad employees, and pedestrians. See 61 FR 8881. FRA believes that these measures are more effective approaches to enhancing safety at grade crossings than an attempt to design speed limits for each geographic situation.

G. Vegetation

The vegetation control requirements of Part 213 currently deal with fire hazards to bridges, visibility of railroad signs and signals, interference with normal trackside duties of employees, proper functioning of signal and communication lines, and the ability to inspect moving equipment (''roll by'' inspections). The regulation does not address the issues of motorists' ability to see warning devices at highway-rail crossings.

Since 1978, accidents and fatalities at highway-rail grade crossings have decreased dramatically due to engineering improvements at individual crossings, education of the public, and greater enforcement of highway traffic laws. Nevertheless, FRA finds that the present loss of life, injuries, and property damage are still unacceptable. In 1995, 579 people were killed, and 1,894 suffered serious injuries in grade crossing accidents. Highway-rail collisions are the number one cause of death in the entire railroad industry, far surpassing employee or passenger fatalities.

In lengthy discussions about vegetation at grade crossings, the Track Working Group found itself grappling with a very complex issue that cannot be resolved simply by requiring brush to be cut away from grade crossings. The Track Working Group considered a proposal which would have set sight distances for motorists approaching highway rail grade crossings. However, the group quickly realized that the issue requires the expertise of entities not represented on the Track Working Group or RSAC, e.g., state and federal highway designers, traffic engineers, as well as representatives of local jurisdictions with grade crossings. This notice, therefore, proposes only one addition to current requirements of railroads in maintaining vegetation. Under this proposal, railroads will be required also to clear vegetation away from signs and signals on railroad rights-of-way at grade crossings. Because the scope of Part 213 limits vegetation requirements to railroad property, this proposal does not attempt to dictate standards for surrounding landowners. The additional language is intended only to cover the clearing of vegetation at highway-rail grade crossings to provide adequate visibility of railroad signs and signals; it is not intended to cover or preempt state or local requirements for the clearing of vegetation on railroad rights-of-way at highway-rail grade crossings.

The RSAC views this proposed requirement as a first of several regulatory steps to reduce the inherent dangers of highway rail grade crossings. Along with the proposal for this additional requirement, the RSAC, following a recommendation by the Track Working Group, has requested that the FRA Administrator recommend that the Department of Transportation initiate a joint regulatory proceeding by FRA and the Federal Highway Administration to address vegetation maintenance and sight distances for motorists at grade crossings. Should the Department of Transportation decide not to initiate such a regulatory project, FRA will then consider the next appropriate action which may include launching its own regulatory proceeding.

H. Trackside Walkways

The Track Working Group agreed that it was not prepared at this time to recommend to the RSAC whether or not this proceeding should address trackside walkways. Therefore, this notice does not include any proposals or discussions addressing this issue.

I. Gage Restraint Measurement System

Historically, railroads assess a track's ability to maintain gage through visual inspections of crossties and rail fasteners. However, the inability of the track structure to maintain gage sometimes becomes apparent only after a derailment occurs. Many railroads throughout the country have successfully tested the GRMS, which was developed under a joint FRA/industry research project.

Accident statistics taken from FRA's Annual Accident/Incident Bulletins reveal that from 1985 through 1995, reportable wide gage derailments from defective crossties and fasteners totaled 2,232 instances and cost the industry over 60 million dollars in damages.

Current crosstie and fastener maintenance techniques rely heavily on visual inspections by track inspectors, whose subjective knowledge is based on varying degrees of experience and training. The subjective nature of those inspections sometimes create inconsistent determinations about the ability of individual crossties and fasteners to restrain track gage. Crossties may not always exhibit strong indications of good or bad condition. If a crosstie in questionable condition is removed from track prematurely, its maximum service life is unnecessarily shortened resulting in added maintenance costs for the railroad. Yet, a crosstie of questionable condition left too long in track can cause a wide-gage derailment with its inherent risk of injury to railroad personnel and passengers and damage to property. In many instances of gage failure caused by defective crossties and/or fasteners, the static or unloaded gage is within the limits prescribed by the current track standards. However, when a train applies an abnormally high lateral load to a section of track that contains

marginal crosstie or fastener conditions, the result is often a wide gage derailment.

In 1993, FRA granted CSX Transportation a waiver of compliance for the purpose of conducting a test program to evaluate the GRMS performance-based standard using FRA's research vehicle, in lieu of existing crosstie and rail fastening requirements, on nearly 500 miles of various track segments. The experience gained under this waiver has provided FRA with the opportunity to continually make adjustments to the conditional requirements of the waiver to the point where the technology has proven itself to be a more consistent method of objectively determining crosstie and fastener effectiveness. FRA believes the technology is now ready to be deployed within the industry.

Recently, CSX Transportation contracted for the design and construction of a GRMS vehicle which has been approved by FRA for the purposes of testing over the same waiver territory. CSX has contracted for a second GRMS vehicle to be built, and several other Class 1 railroads have also contracted for the development of GRMS vehicles. The key issue before the Working Group was whether this technology should be used as a supplement to the existing crosstie and fastener requirements, as an alternative to these existing requirements, or some combination of both.

The Track Working Group could not reach consensus on whether or not the revised standards should contain language to accommodate this technology. The RSAC has recommended that a small task group continue evaluating the possibility of developing GRMS standards for broader application within the industry. This notice invites public comment regarding the feasibility of this technology as an alternative inspection standard or as an additional inspection method.

J. High Speed Rail Standards

By this notice, FRA proposes to facilitate further development of high speed rail transportation by instituting safety standards for track to be used by high speed trains. Current regulations contain six classes of track that permit passenger and freight trains to travel up to 110 m.p.h. Passenger trains have been allowed to operate at speeds over 125 m.p.h. under conditional waiver granted by FRA. This notice proposes to add three new classes of track that will designate standards for track over which trains may travel at speeds up to 200 m.p.h. Standards for high speed track classes will be contained in a new Subpart G of Part 213 which will cover track Classes 6 through 9.

These proposed track standards constitute only one of several components comprising a regulatory program permitting trains to travel at high speeds. Other factors FRA must address in regulations outside of Part 213 include passenger emergency preparedness, wheel conditions, braking systems, and grade crossings. These proposed standards are an integral part of that larger regulatory scheme.

FRA's approach to track safety standards for high speeds is based on the fundamental principle that vehicles in the high speed regime must demonstrate that they will not exceed minimum vehicle/track performance safety limits when operating on specified track. In addition, railroads must monitor the vehicle/track system to ensure that the safety limits will be met under traffic conditions.

A panel of experts in high speed rail transportation worked with the Track Safety Working Group to provide recommendations for vehicle/track performance limits and track geometry. The panel identified acceleration and wheel/rail force safety criteria by reviewing technical studies, considering foreign experience and practices, and performing independent computer simulation and analytical studies. Once it identified vehicle/track performance limits, the panel developed specific geometry safety criteria. The panel also recommended requirements necessary for track structure to sustain the forces generated by vehicles at high speeds.

FRA's proposes to use the best available technical data about dynamic performance of vehicle/track systems to develop safety standards that are practical to implement. The proposed high speed standards in this notice provide for the qualification of vehicles; geometry standards for gage, surface, and alignment; track structure; and inspection requirements for both automated and visual inspections. While some of the sections in the proposed Subpart G are identical to their counterparts in other sections of the regulation, the standards for high speed operations generally differ markedly from those for the lower track classes which cover a much broader range of railroad vehicles. Several sections are unique to the high speed environment, and other sections are adapted from requirements for the lower track classes.

K. Torch Cut Rails

This notice addresses the practice by some railroads of using a torch to cut rail, a practice that was widespread in the railroad industry until a few years ago. Now the practice is used by most railroads only for emergency repairs in Classes 3 through 5 track, because technology has advanced to the point where cutting rail with the various types of rail saws that are readily available is more efficient than torch cutting. Nevertheless, torch cuts from years ago when the practice was more prevalent still exist and are believed by some to pose a safety hazard. In 1983, following its investigation of an Amtrak derailment in Texas, the NTSB recommended that torch cuts be removed and that trains move at only 10 m.p.h. over torch cuts made in emergency situations or as a preparatory step in field welding. It should be noted, however, that the rail involved in the Texas accident had a type of high alloy content which the industry now recognizes as inferior. It is no longer used in the industry.

Because rails that have been torch-cut have a greater tendency to develop fractures in the short term, members of the Track Working Group all agreed that the practice of torch-cutting rails should be prohibited in the future in Classes 3 through 5 track. However, they found it more difficult to agree on recommendations about what to do with existing torch cuts. Labor union representatives on the Track Working Group cited the known danger of torch cut rails in first suggesting that they all be removed from track in Classes 3 through 6. On the other hand, railroad representatives argued that torch cuts tend to cause rail to fail early. They also asserted that torch cuts that have existed for a long time generally will not cause rail breakage.

All parties agreed that torch cuts existing on yard tracks and main tracks where trains operate at slow speeds (Classes 1 and 2) do not pose as high a risk. FRA could provide no reliable data on the number of existing torch cuts. The railroads reported that torch cuts no longer exist on Class 6 track, and the torch cuts remaining in Class 5 track nationwide probably number ''in the hundreds.''

The Track Working Group agreed to recommend to the RSAC that existing torch cuts in track Classes 1 and 2 be allowed to remain. However, the practice of torch cutting rails in track Classes 3 and above, except for emergency temporary repairs, will be prohibited in the future. Existing torch cuts in Class 3 track over which regularly scheduled passenger trains operate will be inventoried and any torch cuts that are found later but are not listed on the inventory must be removed. Torch cuts in Class 4 track

must be removed within two years of the effective date of this rule, and torch cuts in Class 5 track must be removed within one year. The RSAC and FRA adopted this proposal, further discussed in the Section-by-Section portion of this notice.

L. Metric System

In the 1992 ANPRM, FRA requested comments in response to a proposal to create a dual system of measurements, English and metric, for inclusion in these regulations. Responses were varied. Some commenters suggested that FRA implement metric standards, while others recommended that a dual system would be better. Still others argued that the addition of metric standards, whether as a single standard or in a dual system with English standards, would cause confusion in the industry. They added that computerized recordkeeping would have to be re-programmed at a significant expense.

The RSAC, after a discussion of the issue by the Track Working Group, decided not to recommend the addition of metric standards at this time. Therefore, FRA concludes that the introduction of metric values into the regulations is not appropriate at this time.

* * * * *

Section By Section Analysis

Section 213.1—Scope of the Part

The proposed amendment to this section would eliminate the word ''initial.'' When the Track Safety Standards were first published in 1971, they were referred to as ''initial safety standards'' because they were the first Federal standards addressing track safety. Twenty-five years and several amendments later, the current Track Safety Standards are no longer initial standards. Therefore this amendment will eliminate a mischaracterization of the standards by removing the outdated descriptive ''initial.''

Section 213.2—Preemptive effect

This notice proposes to add this section to Part 213 to indicate that states cannot adopt or continue in force laws related to the subject matter covered in this rule, unless such laws are needed to address a local safety hazard and they impose no undue burden on interstate commerce. This section is consistent with the mandate of 49 U.S.C. § 20106, formerly § 205 of the Federal Railroad Safety Act of 1970. Although the courts ultimately determine preemption in any particular factual context, this section provides a statement of agency intent and promotes national uniformity of regulation in accordance with the statute.

Section 213.3—Application

This notice does not propose to amend this section. The RSAC's Track Working Group discussed amending subsection (b) to reference Appendix A of Part 209 in an effort to clarify FRA's safety policy toward trackage used by general system railroads within the confines of installations. According to Appendix A of Part 209, an plant owner is held liable for the safety of any plant trackage over which a general system railroad operates. The Working Group advised that a reference to Appendix A of Part 209, which is merely a statement of FRA policy, could have the effect of making all provisions of Part 213 enforceable against thousands of plant owners, at least to the extent over which general system railroads operate within plant borders. Such a result would be more far-reaching than intended by the RSAC. Even while FRA declines to apply Part 213 to plant railroads, the agency continues to have safety jurisdiction over those railroads and may invoke its statutory emergency authority if it deems it necessary in order to safeguard anyone from the hazard of death or personal injury.

Section 213.4—Excepted Track

This notice proposes to maintain the provision for excepted track with added restrictions for its use and maintenance. Since its inception in 1982, the excepted track category has become an economic issue for some small railroads, particularly short line railroads and low volume shippers. It allows railroads to continue to use, on a limited basis, low-density trackage that does not earn sufficient revenue to justify the expense of maintaining it to higher track standards. It allows short lines to acquire and use trackage that may have been abandoned by larger railroads, thereby preserving rail service to shippers and avoiding the necessity of shifting traffic over those lines from moving to some other, perhaps more hazardous, means of transport.

Because the majority of reportable derailments on excepted track are track-caused, and the majority of this total are wide gage related, this notice proposes to institute a requirement that gage must not exceed of 58¼'' on excepted track. This requirement will only apply to the actual gage measurement itself, and will not extend to the evaluation of crossties and fasteners which provide the gage restraint. A clarification has been added to the inspection requirements on excepted track which specifically reference turnout inspections as being required under this section.

The proposal also includes a requirement that railroads notify FRA at least 10 days before removing trackage from excepted status. This provision is to prevent the practice FRA has witnessed in the past by some railroads who remove trackage from excepted status only long enough to move a passenger excursion train or a train with more than five cars containing hazardous materials. Furthermore, the proposal includes an edit to § 213.4(e)(2) which changes the word ''revenue'' to ''occupied'' in describing passenger trains prohibited from operating over excepted track. This change addresses a misconception by some railroads that they could operate passenger excursion trains over excepted track as long as they did not charge passengers admission for a ride. The proposed change clarifies that the prohibition is directed toward all passengers but is not meant to include train crew members, track maintenance crews, and other railroad employees who must travel over the track to attend to their work duties.

Section 213.5—Responsibility of track owners

This notice proposes changes to subsections (c) and (d) to modify the way in which track owners may assign compliance responsibility to another entity. Under the current regulations, a track owner may petition the Federal Railroad Administrator to recognize another party as the one primarily responsible for the maintenance and inspection of the owner's track. This provision is intended to facilitate compliance by track owners whose track is leased to another entity for operation. Often track owners (e.g., municipal communities, county governments) do not have the necessary expertise to maintain compliance with Federal track standards, but their track lessees do. Thus, track owners can successfully petition FRA for reassignment of primary responsibility by providing certain information about the assigned party and the relationship of the assigned party to the track owner. When such a petition is approved by FRA, the assigned party becomes responsible, along with the track owner, for compliance with Part 213.

The proposed change for these subsections eliminates the approval process by FRA, shown in years past to be the cause of unnecessary paperwork. Records show that FRA has approved almost every such petition it has reviewed. Under the proposed subsection, a track owner could reassign

responsibility to another entity simply by notifying FRA's regional administrator for the FRA region in which the track is located. The notification would include the same information required for the petitions under the current standards. However, FRA would discontinue its practice of publishing in the **Federal Register** the petitions for reassignment, along with requests for public comment. The reassignments would no longer be reviewed by FRA's Railroad Safety Board.

FRA believes that the proposed change would not diminish track safety. Although the intent of the original subsection was to give FRA some control over who should be responsible for maintaining track, the practical application of the subsection has shown that such control by the agency is unnecessary. Rather, it is more important for FRA to know what party or parties to hold responsible for compliance with track safety standards. Therefore, the proposed subsection (c) would require notification to the agency of reassignments of track responsibility, but it would no longer require approval by FRA now required in subsection (d). The text currently shown as subsection (d) would be eliminated.

This notice also proposes one minor change in current subsection (e), substituting the name ''Surface Transportation Board'' for ''Interstate Commerce Commission.'' This substitution is meant to reflect Congress'' action in 1995 to eliminate the Interstate Commerce Commission and turn over many of its functions to the new Surface Transportation Board within the Department of Transportation. With the elimination of the current text of subsection (d), this subsection now designated as (e) would become subsection (d).

Section 213.7—Designation of qualified persons to supervise certain renewals and inspect track

In the past, FRA has interpreted this section in a way that allowed signal maintainers and other railroad employees to pass trains over broken rails or pull-aparts in situations when they were the first on the scene to investigate a signal or track circuit problem. Under this interpretation, the intent of the regulation would not be violated if signal maintainers or others had been given selected training relating to the safe passage of trains over broken rails and pull-aparts. The BMWE, however, has argued that this section was never intended to allow for the partial qualification of personnel on Part 213 standards.

The RSAC recommends the creation of a new subsection (d) which prescribes the manner in which persons not fully qualified as outlined in paragraphs (a) and (b) of this section may be qualified for the specific purpose of authorizing train movements over broken rails and pull-aparts. Language in the new paragraph is specific to employees with at least one year of maintenance of way or signal experience and requires a minimum of four hours of training and examination on requirements related to the safe passage of trains over broken rails and pull-aparts. The purpose of the examination is to ascertain the person's ability to effectively apply these requirements. It is not to be used as a test to disqualify the person from other duties.

The maximum speed over broken rails and pull-aparts shall not exceed 10 m.p.h. However, movement authorized by a person qualified under this subsection may further restrict speed over broken rails and pull-aparts if warranted by the particular circumstances. This person must watch all movements and be prepared to stop the train if necessary. Fully qualified persons under § 213.7 must be notified and dispatched to the location promptly to assume responsibility for authorizing train movements and effecting temporary or permanent repairs. The word ''promptly'' is meant to provide the railroad with some flexibility in events where there is only one train to pass over the condition prior to the time when a fully qualified person would report for a regular tour of duty, or where a train is due to pass over the condition before a fully qualified person is able to report to the scene. Railroads should not use persons qualified under 213.7(d) to authorize multiple train movements over such conditions for an extended period of time.

Section 213.9—Classes of Track: Operating Speed Limits

This notice proposes to move Class 6 standards to Subpart G, a new subpart which establishes track safety standards for high speed rail operations. The new subpart will consist of Class 6 and three new track classes, Classes 7 through 9, to accommodate train speeds up to 200 m.p.h. The Track Working Group and the RSAC recommend including Class 6 in the high speed standards because that class of track already requires certain heightened maintenance practices not required by the lower classes of track.

Section 213.11—Restoration or Renewal of Track Under Traffic Conditions

An added phrase recommended by the RSAC for the end of this section would clarify a qualified inspector's authority to limit the speed of trains operating through areas under restoration or renewal. In the Track Working Group, the BMWE expressed concern that the current language of the section provides no guidance for track inspectors determining the appropriate speed through restoration areas. The language proposed by this notice gives a qualified track inspector discretion to set train speed through a work area, but does not allow the inspector to authorize trains to operate at speeds faster than the maximum speed for the appropriate track class. This change does not represent a change to past interpretation and enforcement of this section; it is merely a clarification of established policy.

Section 213.15—Civil Penalty

This notice proposes no changes to this section. The section covers all subparts to this part, including Subpart G. Appendix B, which sets forth the civil penalty schedule for violations of this part, will be revised in the final rule to include civil penalties for violations of Subpart G.

Section 213.17—Exemptions

The Track Working Group considered a proposal by the BMWE that this section be eliminated. However, the group agreed that the existing language allowing for the temporary suspension of certain track standards is appropriate and exemptions are necessary for the industry to experiment with alternative methods of compliance and new technology. Therefore, the RSAC recommended that this section be left as currently written, and this notice proposes no changes to it.

Section 213.33—Drainage

In its 1990 petition for revision of the track standards, the BMWE requested that this section be expanded to include more specific requirements for drainage and water diversion around track roadbeds, addressing water seeping toward the track, water falling upon the roadbed, cross drainage, and the use of geotextiles. The proposal was discussed by the Track Working Group, as was a proposal by the AAR that merely modified the phrase ''clear of obstruction'' to ''sufficiently clear of obstruction.'' After much discussion, the group recommended to the RSAC that the section be left unchanged. Therefore, this notice does not propose any changes to the requirements for

maintaining proper drainage adjacent to roadbeds.

Section 213.37—Vegetation

This notice proposes to add a phrase to subsection (b) to include in the requirement to clear vegetation from signs and signals along railroad rights-of-way and at highway rail grade crossings. The current regulation stipulates only that vegetation cannot interfere with visibility of railroad signs and signals. Because the scope of Part 213 limits vegetation requirements to railroad property, this proposal does not attempt to dictate standards for surrounding landowners. The additional language is intended only to cover the clearing of vegetation at highway-rail grade crossings to provide adequate visibility of railroad signs and signals; it is not intended to cover or preempt state or local requirements for the clearing of vegetation on railroad rights-of-way at highway-rail grade crossings.

Section 213.55—Alignment

This notice proposes to introduce a 31-foot chord requirement, in addition to the present 62-foot chord requirement, for measuring alignment on curves in Classes 3 through 5 track. The RSAC, on advice from the Track Working Group, recommends this addition to control transient short wavelength variations in alignment. This control is considered necessary to introduce an averaging approach for the application of the V_{max} formula which determines the maximum allowable operating speed for each curve. The change in the application of the V_{max} formula is discussed in § 213.57 of this notice.

Section 213.57—Curves; Elevation and Speed Limitations

The existing subsection (a) limits the design elevation on curves to a maximum of six inches. However, this subsection also provides for a deviation from this design elevation, which is contained in the § 213.63 table. For a curve elevated to six inches in Class 1 track, the allowable deviation would be three inches and therefore any point in that curve could have as much as nine inches of elevation and remain in compliance. For a similar situation in Class 3 track, any point in that curve could have as much as seven and three-fourths inches of elevation and still be in compliance. For modern rail cars with a high center of gravity, low speed curve negotiation under excessive levels of superelevation places the vehicle in an increased state of overbalance. This condition creates the possibility of wheel unloading and subsequent wheel climb when warp conditions are encountered within the curve.

The Track Working Group considered the characteristics of the present-day vehicle fleet and concluded that a lower limit on maximum elevation in a curve should be prescribed in the regulations. Therefore, this notice proposes to revise subsection (a) to limit the amount of superelevation at any point in a curve to not more than eight inches on Classes 1 and 2 track, and not more than seven inches on Classes 3 through 5 track.

Subsection (b) of this section addresses the maximum allowable operating speed for curved track. The equilibrium speed on a curve is the speed where the resultant force of the weight and centrifugal force is perpendicular to the plane of the track. The American Railway Engineering Association's (AREA) Manual of Engineering, Chapter 5, states that passenger cars have been shown to ride comfortably around a curve at a speed which produces three inches of underbalance, or otherwise stated, three inches less elevation than would be required to produce equilibrium conditions. The AREA Manual sets forth a formula based on the steady-state forces involved in curve negotiation which is commonly referred to as the V_{max} formula. This formula considers the variables of elevation, curvature, and the amount of unbalanced elevation or cant deficiency in determining the maximum curving speed. The present standards under subsection (b) limit curving speed based on a maximum of three inches of unbalance or cant deficiency and is commonly referred to as the ''three-inch unbalance formula''. FRA has granted waivers for other levels of unbalance on specified equipment.

Over the years, railroad engineers have differed as to the application of this three-inch unbalance formula. Some engineers have suggested the designed elevation and curvature should be used to calculate the maximum operating speed around a curve. Other engineers recommend that an average of the entire curve or segment of the curve better recognizes situations where steady-state conditions change. For example, the elevation may be decreased through a road crossing to accommodate road levels and then increased beyond the crossing.

Recognizing the origin and purpose of the V_{max} formula, the Track Working Group recommended that an average of the alignment and crosslevel measurements through a track segment in the body of the curve should be used in the formula to arrive at the maximum authorized speed. This approach recognizes the ''steady-state'' purpose of the formula. Transient locations (points) are covered by the alignment and track surface tables. Normally, approximately 10 stations are used through the track segment, spaced at 15′6″ apart. If the length of the body of the curve is less than 155 feet, measurements should be taken for the full length of the body of the curve.

This uniform or averaging technique over the 10 stations through the track segment is consistent with the concept used by the vehicle/track dynamicists who discuss ''g'' levels in steady-state conditions, often considered to be one or two seconds. At 80 m.p.h., a vehicle will have traversed approximately 118 feet of track in one second. Measurements taken over 155 feet (10 stations at 15′6″) provides the necessary distance to determine the behavior of the vehicle over the one-or two-second steady-state interval.

Analysis has shown that, although application of the V_{max} formula on a point-by-point basis is overly conservative, it does provide for the coverage of certain combinations of alignment and crosslevel deviations in Classes 3 through 5 track which could result in wheel climb derailments. However, further analysis has shown that these transient short-wave anomalies can be covered by the introduction of a 31-foot chord to the alignment table contained in § 213.55.

The Track Working Group also recommended the addition of new paragraphs (c), (d), (e), and (f) which will permit curving speeds based on four inches of unbalance or cant deficiency for certain categories of equipment that demonstrate safe curving performance at this level of unbalance. The means of qualification is a basic procedure known as a ''static lean'' test that has been used many times in recent years for the testing of equipment for operation at higher cant deficiencies. Although four inches of cant deficiency is usually applied to passenger trains, other types of equipment with comparable suspension systems, centers of gravity, and cross-sectional areas may perform equally well. On the other hand, the Track Working Group did not intend to suggest that standard freight equipment must have the prerequisite vehicle characteristics which would allow curving speeds based on more than three inches of cant deficiency. The Track Working Group recommended that FRA review the information provided by the track owner or operator to verify safe curving performance and approve the proposal before the vehicles are operated at four inches of cant deficiency.

This notice proposes to revise Appendix A, which currently contains a table specifying the maximum allowable operating speed for each curve based on three inches of cant deficiency. Under this proposed change, Appendix A would be amended to include two tables. Table 1 would be identical to the current table, while Table 2 would specify curving speeds based on four inches of cant deficiency.

Section 213.63—Track Surface

The present track surface table contained in this section was established in the original standards more than 20 years ago and has served the industry well as a minimum safety requirement. However, some of the parameters need updating to recognize the knowledge gained from investigation of derailment causes, engineering analysis, and changes in terminology. Therefore, this notice proposes several changes to track surface requirements to better address current knowledge of track/vehicle interaction.

This notice proposes that the parameter referring to the rate of runoff at the end of a track raise and the parameter for deviation from uniform profile should both remain unchanged. The profile parameter is conservative for single occurrences on both rails and less conservative for repeated perturbations.

In the 1982 revisions to the Track Safety Standards, the requirement for maintenance of curve records, including degree of curvature and the amount of elevation designated in curves was removed. Since that time, the term ''designated elevation'' has been controversial and difficult to apply. This notice proposes to remove that term from the revised table.

This notice also proposes to revise the way the Track Safety Standards address transition spirals. For many curves, especially in the lower track classes, track maintenance personnel often differ as to the locations where spirals begin and end, as well as to the measured runoff rate. In view of the somewhat subjective nature of the concept of uniform runoff in spirals, the proposed changes in this notice use a different approach from runoff or ''variation in crosslevel in spirals'' and incorporate this parameter into another parameter.

In the present track surface table, the maximum variation in crosslevel in spirals could exceed that allowed on tangents and in the full body of curves over the same distance. The mechanism for derailment in the body of the curve is the same as in the spiral. This notice proposes that the differences in crosslevel in spirals be included in one parameter to simplify the table and correct the discrepancy that currently exists. This notice also proposes that the existing parameters referring to ''deviation from designated elevation'' and ''variation in crosslevel'' in spirals are unnecessary, provided spiral variations in crosslevel are included in the ''warp'' parameter. The ''warp'' parameter is measured by determining the difference in crosslevel between two points less than 62-feet apart.

While the difference in crosslevel parameter (warp) addresses the majority of situations where wheel climb or rock off can occur, three footnotes are added to the table to address specific situations.

Footnote 1 addresses the present practice on some railroads to design a greater runoff of elevation in spirals due to physical restrictions on the length of spirals. Spiral runoff in new construction must be designed and maintained within the limits shown in the table for difference in crosslevel.

Footnote 2 is included to address the known derailment cause where a warp occurs in conjunction with an amount of curve elevation that approaches the maximum typically in use. When a vehicle is in an unbalanced condition on this curve elevation and encounters a warp condition, the vehicle is subjected to wheel/rail forces that could result in wheel climb.

Footnote 3 is included to address the harmonic rock off problem of which the railroad industry has been aware for many years. Under repeated warp conditions, the vehicle can experience an increase in side-to-side rocking that may result in wheel climb in curves or center plate separation on tangents.

Section 213.109—Crossties

This notice proposes to amend this section to include several recommendations made by the Track Working Group and adopted by the RSAC. After reviewing FRA's Accident/Incident data base, the group concluded that wide gage resulting from defective crossties continues to be the single largest causal factor associated with track-caused reportable derailments.

Gage widening forces applied to the track structure from the movement of rolling stock tend to increase as track curvature increases. Therefore, this notice proposes to increase the number of effective crossties required under subsection (c) for turnouts and curved track with over two degrees of curvature. The purpose of this proposed requirement is to strengthen the track structure to enable it to better resist such forces.

In Class 1 track, the required number of crossties in any 39-foot segment of track would increase from five to six; in Class 2 track, from eight to nine; in Class 3 track, from eight to 10; and in Classes 4 and 5 track, from 12 to 14. These changes are proposed to become effective 2 years after the effective date of the final rule.

Under subsection (d), this notice proposes an optional requirement for the number and placement of crossties near rail joints in Classes 3 through 5 track. The existing requirement calls for one crosstie within a specified distance from the rail joint location, while the proposed optional requirement allows two crossties, one on each side of the joint, within a specified distance from the rail joint location. FRA previously examined both standards under various static loading conditions. The results indicated that the proposed optional requirement provides equal or better joint support than the present requirement.

This notice also proposes to add a new subsection (e) to address track constructed without conventional crossties, such as concrete-slab track. The existing standards do not address this type of construction in which the running rails are secured through fixation to another structural member. The proposed addition addresses this type of track construction by requiring railroads to maintain gage, surface, and alignment to the standards specified in subsections (b)(1) (i), (ii), and (iii).

Section 213.113—Defective Rails

This notice proposes several substantive changes to this section which reflect the results of FRA's on-going rail integrity research program. The results indicate the need to revise the remedial action tables and specifications to more adequately address the risks of rail failure, reserving the most restrictive actions on limiting operating speed for those rail defects which are large enough to present a risk of service failure.

Because ''zero'' percent entries serve no useful purpose, they should be dropped from the remedial action tables. Similarly, ''100'' percent of rail head cross-sectional area is not a meaningful dividing point for transverse defects. The proposed revisions to the remedial action table for transverse defects places a lower limit of five percent of the rail head cross-sectional area. If a transverse defect is reported to be less than five percent, no remedial action would be required under the revised standards. Defects reported less than five percent are not consistently found during rail breaking programs and

therefore defect determination within this size range is not always reliable. Furthermore, if the determination is reliable, defect growth to service failure size within the newly established testing frequency under § 213.237 is highly unlikely. The proposed revisions to the remedial action table for transverse defects also establishes one or more mid-range defect sizes, between five percent and 100 percent, each of which will require specific remedial actions.

In the proposed revised remedial action table, all longitudinal defects are combined within one group subject to identical remedial actions based on their reported size. These types of longitudinal defects all share similar growth rates and the same remedial actions are appropriate to each type. The lower limit of ''0'' inches has been eliminated and the size divisions have been revised upward slightly to reflect FRA's research findings which indicate that this class of rail defect has a relatively slow growth rate.

The ''0'' inch lower limit has been eliminated also for bolt hole cracks and broken bases. The proposed revision also includes minor changes in the size divisions for bolt hole cracks, as well as changes in the required remedial action for broken bases less than 6 inches and damaged rail.

This notice also proposes to add ''Flattened Rail'' to the rail defect table. Although it is not a condition shown to affect the structural integrity of the rail section, it can result in less-than-desirable dynamic vehicle responses in the higher speed ranges. The flattened rail condition is identified in the table, as well as in the definition portion of subsection (b), as being ⅜″ or more in depth and 8″ or more in length.

The Track Working Group discussed at length a ''break out in rail head'', but was unable to agree on a standard definition. The RSAC therefore recommends that the industry continue to be guided by FRA's current interpretation that a break out in the rail head consists of a piece physically separated from the parent rail.

This notice also proposes to make several substantive revisions to the remedial actions specified under ''Notes'' in subsection (a)(2) of this section. A new note ''A2'' has been added to address the mid-range transverse defect sizes which have been added to the table. This remedial action allows for train operations to continue at a maximum of 10 m.p.h. for up to 24 hours, following a visual inspection by a person designated under § 213.7 of this part.

Note ''B'', which currently does not define a limiting speed, would be changed to limit speed to 30 m.p.h. or the maximum allowable speed under § 213.9 for the class of track concerned, whichever is lower.

Notes ''C'', ''D'', and ''H'' have been revised to limit the operating speed, following the application of angle bars, to 50 m.p.h. or the maximum allowable speed under § 213.9 for the class of track concerned, whichever is lower. Presently, the standards limit speed to 60 m.p.h. or the maximum allowable speed under § 213.9 for the class of track concerned, whichever is lower.

A second paragraph in Note ''C,'' the remedial action which applies specifically to detail fractures, engine burn fractures, and defective welds, proposes a significant change to the current standards. This revision addresses defects which are discovered in Classes 3 through 5 track during an internal rail inspection required under § 213.237, and whose size is determined not to be in excess of 25 percent of the rail head cross-sectional area. For these specific defects, a track owner may operate for up to four days at a speed limited to 50 m.p.h. or the maximum allowable speed under § 213.9 for the class of track concerned, whichever is lower. If the defective rail is not removed or a permanent repair made within four days of discovery, the speed shall be limited to 30 m.p.h. until joint bars are applied.

Under the existing standards, these types of defects, predominant on heavy utilization trackage, would require a 30 m.p.h. restriction until angle bars are applied. Practice within the industry today is to operate the rail test vehicle until the number of defects found exceeds the railroad's ability to effect immediate repairs. At that time the rail test vehicle is shut down for the day. The purpose of this practice is to reduce speed restrictions which not only affect the railroad's ability to move trains, but also can produce undesirable in-train forces that can lead to derailments. However, prematurely shutting down rail test car operations negate any possibility of discovering larger and more serious defects that may lie just ahead.

Furthermore, the results of FRA's research indicate that defects of this type and size range have a predictable slow growth life. Research indicates that even on the most heavily utilized trackage in use today, defects of this type and size are unlikely to grow to service failure size in four days.

Section 213.119—Continuous Welded Rail (CWR); General

This notice proposes to introduce a requirement for railroads to establish and place in effect written procedures to address CWR. These procedures must address the installation, adjustment, maintenance and inspection of CWR track, and include a formal training program for the application of these procedures. The procedures, including a program for training, must be submitted to FRA within six months following the effective date of this rule. Although many railroads already have in effect a CWR program, FRA will review each submitted set of procedures for compliance with the individual requirements of the proposed regulation.

Within the last decade, through the determined efforts of researchers from industry and government, along with experience gained from accident investigators and track maintenance people, the railroad industry has gained a better comprehension of the mechanics of laterally unstable CWR track. As a result, the industry has identified maintenance procedures that are critical to maintaining CWR track stability.

The proposed requirements do not detail how each procedure is to be carried out. Rather, they identify the basic safety issues and permit railroads to develop and implement their own procedures to address those issues, provided the procedures are consistent with current research results as well as findings from practical experience documented in recent years. The procedures should be clear, concise, and easy to understand by maintenance-of-way employees. A comprehensive training program must be in place for the application of these procedures.

The proposed regulation requires the designation of a ''desired rail installation temperature range'' for the geographic area in which the CWR is located. By definition contained in the proposed regulation, this is the rail temperature range at which forces in CWR should not cause a track buckle in extreme heat, or a pull-apart during cold weather. Current general practice within the industry, based to a large extent on research findings, is to establish a ''desired rail installation temperature range'' which is considerably higher than the annual mean temperature for the geographic area in which the CWR is located. The proposed regulation provides railroads with flexibility to establish the ''desired rail installation temperature range'' based on the characteristics of the specific territory

involved and the historical knowledge acquired through the application of past procedures.

When CWR is installed and anchored/fastened at the ''desired rail installation temperature range,'' it is considered to be in its initial ''stress-free'' state, where the net longitudinal force is equal to zero. Research discloses that many factors, some of which are unavoidable, like dynamics of train operation, the necessary lining and surfacing of the track structure, and performing rail repairs all contribute to a gradual lowering over time of the initial rail installation temperature range which increases the potential for track buckling. This phenomenon substantiates the need to install and anchor/fasten CWR at a relatively high rail installation temperature range.

Maintenance of the ''desired rail installation temperature range'' is critical to ensuring CWR stability. Therefore, the procedures for installation, adjustment, effecting rail repairs, and repairing track buckles or pull-aparts must compare the existing rail temperature with the ''desired rail installation temperature range'' for the area concerned.

The procedures also must address several other topics, such as rail anchoring, controlling train speed when CWR track has been disturbed, ballast re-consolidation, inspections, and recordkeeping for the installation of CWR and rail repairs that do not conform to the railroad written procedures. A track owner may update or modify CWR procedures as necessary, upon notification to FRA of those changes.

Development of individual CWR programs could prove burdensome for many small railroads. As recommended by the Track Working Group, FRA will work with the American Short Line Railroad Association (ASLRA) to develop a generic set of CWR procedures to apply to low speed/low tonnage Class 2 and Class 3 railroad operations.

Section 213.121—Rail Joints

Under existing subsection (a), the phrase ''proper design and dimension'' has often been interpreted to prohibit the use of any joint bar on a rail section for which it was not specifically designed. This interpretation does not consider the fact that certain joint bars are interchangeable between different rail sections. Therefore, this notice proposes to change the word ''proper'' to ''structurally sound'' in subsection (a).

In subsection (b), this notice proposes to add the modifier ''excessive'' in front of the phrase ''vertical movement.'' The existing language in this subsection implies that no vertical movement of either rail could be allowed when all bolts are tight. This interpretation is too strict. FRA's Enforcement Manual suggests that FRA inspectors evaluate excessive vertical movement when determining compliance with this paragraph. This proposal will make the rule conform to sound practices.

This notice proposes to extend to Class 2 track the prohibition of torch cutting bolt holes in rail. The reference to angle bars has been removed and is to be covered in the proposed new subsection (h) which restricts the practice of re-configuring joint bars. Joint bars for older rail sections are becoming increasingly difficult to find and are no longer being manufactured. Therefore, the new subsection (h) prohibits the re-configuration of joint bars in Classes 3 through 5 track, but not in Classes 1 and 2 track.

Section 213.122—Torch Cut Rail

This proposed new section addresses the proper handling of rails cut by the use of a torch. The practice of torch-cutting rail at one time was commonplace on railroads, but was discontinued in higher speed track several years ago when better saws were developed and railroads discovered that rails that have been torch-cut have a greater tendency to develop fractures. Today, on track Classes 3 and above, the practice is used almost exclusively for temporary emergency repairs that are then quickly replaced with new rail. The purpose of this section is to outlaw the practice of torch cutting rails, except for emergency repairs, on all track in classes above Class 2. Trains speed for track that has been torch cut for emergency repairs made after the effective date of this rule must be reduced to the maximum allowable speed for Class 2 until the torch cut rail is replaced.

The proposed section also provides railroads with guidance for eliminating old torch cut rail in track Classes 3 through 5. The industry believes no torch cuts exist in Class 6 track. Torch cuts in Class 5 track must be eliminated within a year of the effective date of this rule, while torch cuts in Class 4 track must be removed within two years. Within one year of the effective date of this rule, railroads must inventory existing torch cuts in any Class 3 track over which regularly scheduled passenger trains operate. Those torch cuts found and inventoried will be ''grandfathered in.'' Any torch cuts that are found on such track after the expiration of one year and that are not inventoried will be limited immediately to Class 2 speed and removed within 30 days of discovery. If a railroad chooses to upgrade a segment of track from Classes 1 or 2 to Class 3, and regularly scheduled passenger trains operate over that track, the railroad must remove any torch cuts before the speeds can be increased beyond the maximum allowable for Class 2 track. If a railroad chooses to upgrade a segment of track from any class of track to Class 4 or 5, it must remove all torch cuts.

Section 213.123—Tie Plates

This notice proposes to add a new subsection (b) to this section which reads, ''In Classes 3 through 5 track, no metal object which causes a concentrated load by solely supporting a rail shall be allowed between the base of rail and the bearing surface of the tie plate.'' Similar wording for this paragraph was originally recommended to the RSAC by FRA's Technical Resolution Committee.

The specific reference to ''metal object'' is intended to include only those items of track material which pose the greatest potential for broken base rails such as track spikes, rail anchors, and shoulders of tie plates. The phrase ''causes a concentrated load by solely supporting a rail'' further clarifies the intent of the regulation to apply only in those instances where there is clear physical evidence that the metal object is placing substantial load on the rail base, as indicated by lack of load on adjacent ties.

Section 213.127—Rail Fastening Systems

This notice proposes to change the title of this section from ''Rail fastenings'' to ''Rail fastening systems'' and to reduce the language of the regulation to one sentence which reads ''Track shall be fastened by a system of components which effectively maintains gage within the limits prescribed in § 213.53(b).''

The change to ''rail fastening systems'' more adequately addresses the many individual components of modern-day elastic fastening systems, such as pads, insulator clips, and shoulder inserts. The failure of certain critical components within the system could adversely affect the ability of the individual fastener to provide adequate gage restraint. The revised language of the regulation provides for an evaluation of all components within the system, if necessary, in order to evaluate whether they are affording effective gage restraint.

The RSAC considers the current reference to qualified Federal or State

track inspectors and the definition of a qualified State track inspector to be redundant, given the adoption of Part 212. Therefore, this notice proposes to delete the phrase ''qualified Federal or State track inspector,'' as well as the last sentence of the current section which contains the definition of a qualified state track inspector.

Section 213.133—Turnouts and Track Crossings Generally

This notice proposes to retain the language of subsection (a) which reads, ''In turnouts and track crossings, the fastenings must be intact and maintained so as to keep the components securely in place.'' The AAR proposed to revise the language to say, ''* * * the fastenings must be maintained for the safe passage of trains.'' The AAR contended that turnout and track crossings are designed with a high degree of redundancy, making it unnecessary for each fastening to be intact to maintain safety. However, the RSAC recommends that the regulations allow track inspectors discretion to evaluate immediate circumstances in determining what level of remedial action is necessary for loose or missing fastenings. RSAC recommends that inspectors be provided specific guidance about interpreting this provision, such as the guidance contained in technical bulletin T–95–09 recently issued by FRA.

This notice proposes to change subsection (b) to reflect proposals presented by the BMWE and by the AAR and FRA. The RSAC recommends that rail anchoring requirements be extended to include Class 3 trackage and that ''rail anchors'' be changed to ''rail anchoring '' so that rail anchoring would include elastic rail fasteners.

Section 213.135—Switches

This notice proposes to revise subsection (b) to consider the existence of reinforcing bars or straps on switch points where joint bars cannot be applied to certain rail defects, as required under § 213.113(a)(2), because of the physical configuration of the switch. In these instances, remedial action B will govern, and a person designated under § 213.7(a), who has at least one year of supervisory experience in track maintenance, will limit train speed to that not exceeding 30 m.p.h. or the maximum allowable under § 213.9(a) for the appropriate class of track, whichever is lower. Of course, the person may exercise the options under § 213.5(a) when appropriate.

The RSAC did not recommend specific dimensions for determining when switch points are ''unusually chipped or worn,'' as provided for in subsection (h). FRA stated that its Accident/Incident data base indicates that worn or broken switch points are the largest single cause of derailments within the general category of ''Frogs, Switches, and Appliances.'' However, the AAR contended that developing meaningful numbers for these measurements would be a difficult task because most of these derailments are related also to other causal factors such as wheel flange condition, truck stiffness, and train handling characteristics. This notice, therefore, proposes to retain the current wording in subsection (h), allowing qualified individuals to evaluate immediate circumstances to determine when switch points are ''unusually chipped or worn.''

A new subsection (i) is proposed by this notice to read, ''Tongue and plain mate switches, which by design exceed Class 1 and excepted track maximum gage limits, are permitted in Class 1 and excepted track.'' This new subsection provides an exemption for this item of specialized track work, primarily used in pavement or street railroads, which by design does not conform to the maximum gage limits prescribed for Class 1 and excepted track.

Section 213.137—Frogs

This notice proposes to add a new subsection (d) to this section, which reads, ''Where frogs are designed as flange-bearing, flangeway depth may be less than that shown for Class 1 if operated at Class 1 speeds.'' This subsection provides an exemption for an item of specialized track work which by design does not conform to the minimum flangeway depth requirements prescribed in subsection (a) of this section.

Section 213.143—Frog Guard Rails and Guard Faces; Gage

To facilitate an easier understanding of the requirements contained in this section, this notice proposes to add a diagram to illustrate the method for measuring guard check gage and guard face gage. The proposal contains no substantive changes to this section.

Section 213.205—Derails

This notice proposes to add language to this section designed to ensure that derails are maintained to function properly. The RSAC recommended these changes as additional safety features for train crews, as well as railroad employees working on and around tracks.

Section 213.233—Track Inspections

This notice proposes several changes to subsection (b). The five m.p.h. restriction over highway crossings is eliminated to permit safe operation of vehicles through highway traffic. However, the subsection would still require an inspector to perform an adequate inspection, regardless of how the inspector operates over the crossing. Also, the word ''switch'' is replaced by the word ''turnout'' to clarify the track device originally intended to be addressed in the regulation.

The Track Working Group considered advising the RSAC to recommend specific speed restrictions for inspection vehicles. However, after several lengthy discussions, the group suggested instead that this subsection provide the individual inspector with sole discretion in determining vehicle speed based on track conditions, inspection requirements, and other circumstances that may vary from day to day and location to location. The group also suggested the insertion of a footnote at the end of this section which indicates this discretion is not limited by any other part of this section, and is extended to determine sight distance (''visibility remains unobstructed by any cause'') which is referenced in subsections (b) (1) and (2) of this section.

The existing language under subsection (b) does not specify how many tracks may be inspected in one pass of an inspection vehicle in multiple track territory. FRA has never issued interpretive language regarding this issue, opting to judge the overall effectiveness of the inspection program rather than the specific manner in which it was conducted. This notice proposes to establish some guidelines for hy-rail inspections conducted in multiple track territory.

As a result, subsection (b) contains additional language specifying the number of additional tracks that can be inspected, depending on whether one or two qualified individuals are in the vehicle, and depending on the distance between adjacent tracks measured between track centerlines. Inspectors may inspect multiple tracks from hy-rail vehicles only if their view of the tracks inspected is unobstructed by tunnels, differences in ground level, or any other circumstance that would prevent an unobstructed inspection of all the tracks they are inspecting. The revised subsection also requires railroad to traverse each main track bi-weekly and each siding monthly, and to so note on the appropriate track inspection records.

With respect to the inspection frequency required in subsection (c), neither the Track Working Group nor the RSAC could reach agreement in determining a frequency requirement that would be based on speed, tonnage, or track usage. Therefore, this notice does not propose to change the language in this subsection.

Section 213.235—Switch and Track Crossing Inspections

This notice proposes to change subsection (a) by adding the word ''turnout'' after the word ''switch'' to clarify the track device and the intent of the requirement which is to inspect the entire turnout. The word ''switch'' is retained to include switch point derails or any other device which is not considered a full turnout.

A second sentence is added to subsection (a) which reads, ''Each switch in Classes 3 through 5 track that is held in position only by the operating mechanism and one connecting rod shall be operated to all of its positions during one inspection in every 3-month period.'' The nature of this type of switch requires a thorough inspection of the critical parts, some of which are non-redundant. This is best accomplished by operating the switch mechanism to allow for a better inspection of these components. The phrase ''all positions'' is intended to cover slip switches and lap switches.

In subsection (b), the word ''turnout'' is added after the word ''switch'' for the same reasons explained above.

Section 213.237—Inspection of Rail

Under existing subsection (a), the Track Safety Standards require Classes 4 and 5 track, as well as Class 3 track over which passenger trains operate, to be tested annually for internal rail defects. This requirement was established at a time when main line freight traffic was considerably lighter than it is today. At the time the original standards were drafted, test frequencies generally equated to intervals between 15 and 20 million gross tons (MGTs), although there existed some track that carried 40 MGTs or more in one year. As a matter of practice, railroads generally test more often than presently required under the standards, with intervals between tests typically ranging from 20 to 30 MGTs. These typical intervals define a good baseline for generally accepted maintenance practices, and the industry's rail quality managers consider these limits as points of departure for adjustment of test schedules to account for the effects of specific track characteristics, maintenance, traffic, and weather.

This notice proposes to leave unchanged the present annual test requirement for Classes 4 and 5 track and Class 3 track over which passenger trains operate, based on risk factors associated with freight train speeds and passenger train operations. However, with the high utilization trackage that now exists on Class 1 freight railroads, the original requirement based solely on the passage of time, without regard to tonnage, is no longer adequate.

Selecting an appropriate frequency of rail testing is a complex and somewhat controversial task involving many different factors including temperature differential, curvature, residual stresses, rail sections, and cumulative tonnage. Taking into consideration all of the above factors, FRA's research suggests that 40 MGTs is the maximum tonnage that can be hauled between rail tests and still allow a safe window of opportunity for detection of an internal rail flaw before it propagates in size to service failure. This notice proposes that intervals be set at once per year or 40 MGTs, whichever is shorter, for Classes 4 and 5 track and for Class 3 track over which passenger trains operate.

This notice also proposes that Class 3 trackage not supporting passenger traffic be subject to testing for internal rail defects. FRA's Accident/Incident data point to a need for inclusion of all Class 3 trackage in a railroad's rail testing program. Therefore, this notice proposes to add a requirement that Class 3 track over which passenger trains do not operate be tested once a year or once very 30 MGTs, whichever is longer.

This notice proposes the limit of once a year or 30 MGTs because a more frequent testing cycle or a cycle identical to that proposed for Classes 4 and 5 track would be too burdensome for the industry. The proposed limits are designed to give short line railroads and low tonnage branch lines some relief from the introduction of a new regulatory requirement and still reduce the present risks associated with not testing Class 3 track at all.

This notice also proposes the addition of subsections (d) and (e). Subsection (d) addresses the case where a valid search for internal rail defects could not be made because of rail surface conditions. Several types of technologies are presently employed to search for internal rail defects, some with varying means of displaying and monitoring search signals. Therefore, this notice does not define a non-test in absolute technical terms, but rather leaves this judgment to the rail test equipment operator who is uniquely qualified on that equipment.

Proposed subsection (e) specifies the options available to a railroad following a non-test due to rail surface conditions. These options must be exercised prior to the expiration of time or tonnage limits specified in paragraph (a) of this section.

Section 213.239—Special Inspections

The RSAC recommended no change to this section, and likewise, FRA proposes no change to the language in the regulation. However, FRA believes that an explanation of agency policy interpreting the section is in order. Although the section contains a sample list of surprise events that occur in nature, FRA does not view this provision as limited to only the occurrences listed or to only natural disasters. ''Other occurrences'' also includes such natural phenomena as temperature extremes, as well as unexpected events that are human-made, e.g., a vehicle that falls on the tracks from an overhead bridge, a water main break that floods a track roadbed, or terrorist activity that damages track. This interpretation is not new; FRA has always viewed this section to encompass sudden events of all kinds that affect the safety and integrity of track.

Section 213.241—Inspection Records

This notice proposes to change the requirement that railroads retain a record of each track inspection at division headquarters for at least one year. When this provision in subsection (b) was first written, railroads maintained many division headquarters throughout their systems, making it relatively convenient for railroads to maintain inspection records at these locations. Over the years, however, railroads consolidated many of their headquarters, often naming only a few locations as ''division headquarters.'' FRA has contended that maintaining inspection records in only a few locations over a system that may include thousands of miles of track was not in keeping with the spirit of the regulation. Railroads have argued, on the other hand, that compelling them to maintain headquarters for no other purpose than to store records was a burdensome requirement.

The proposed change would allow railroads to designate a location within 100 miles of each state where records can be viewed by FRA track inspectors following 10 days notice by FRA. The provision does not require the railroads to maintain the records at these designated locations, only to be able to provide viewing of them at the locations within 10 days after notification. The

proposal stipulates locations within 100 miles of each state, rather than locations in each state, to accommodate those railroads whose operations may cross a state's line by only a few miles. In those cases, the railroad could designate a location in a neighboring state, provided the location is within 100 miles of that state's border.

A change to subsection (c) requires a track owner to record any locations where a proper rail inspection cannot be performed because of rail surface conditions. A new provision at § 213.237(d) specifies that if rail surface conditions prohibit the railroad from conducting a proper search for rail defects, a test of that rail does not fulfill the requirements of § 213.237(a) which requires a search for internal defects at specific intervals. The new language in subsection (c) of this section requires a recordkeeping of those instances.

This notice also proposes to add a provision for maintaining and retrieving electronic records of track inspections. Patterned after an experimental program successfully tried by the former Atchison Topeka & Santa Fe Railroad with oversight by FRA, the provision in subsection (e) allows each railroad to design its own electronic system as long as the system meets the specified criteria to safeguard the integrity and authenticity of each record. The provision also requires that railroads make available paper copies of electronic records when needed by FRA or by railroad track inspectors.

Subpart G—High Speed Track Standards

Section 213.301—Scope of Subpart.

Subpart G applies to track required to support the passage of qualified flanged wheel, high speed passenger and freight equipment in specific speed ranges. The terms ''qualified'' and ''flanged wheel'' are necessary to limit the scope of this subpart to track that is designed for equipment which has been ''qualified'' to operate on that track within acceptable safety limits. For high speeds, the track and the vehicles operated on the track must be considered as an integral system. This subpart does not apply to technology such as ''Maglev'' that does not use flanged wheel equipment.

Section 213.303—Responsibility for Compliance

Only two response options are available under this paragraph. Track owners who know or have notice of non-compliance with this subpart may either bring the track into compliance with the subpart or halt operations over that track. This section does not offer the railroad the option of operating under this subpart with the supervision of a qualified person, as in the standards for track Classes 1 through 5. Such an option would permit too much opportunity for disaster from human error. Under this subpart, if a track does not comply with the requirements of its class, it must be repaired immediately or train speeds must be reduced to the maximum speed for the track class with which the track complies. It may be necessary on occasion for the track owner to reduce the class of track to Class 5 or below. When this occurs, the requirements for the lower classes (1–5) will apply.

Section 213.305—Designation of Qualified Individuals; General Qualifications

Work on or about a track structure supporting qualified high speed passenger trains demands the highest awareness of employees about the need to perform work properly.

A person may be qualified to perform restorations and renewals under this subpart in three ways. First, the person may combine five or more years of supervisory experience in track maintenance for track Class 4 or higher and the successful completion of a course offered by the employer or by a college level engineering program, supplemented by special on-the-job training. Second, a person may be qualified by a combination of at least one year of supervisory experience in track maintenance of Class 4 or higher, 80 hours of specialized training or in a college level program, supplemented with on-the-job training. Under the third option, a railroad employee with at least two years of experience in maintenance of high speed track can achieve qualification status by completing 120 hours of specialized training in maintenance of high speed track, provided by the employer or by a college level engineering program, supplemented by special on-the-job training.

Similarly, a person may be qualified to perform track inspections in Classes 6, 7, 8 and 9 by attaining five or more years of experience in inspection in track Class 4 or higher and by completing a course taught by the employer or by a college level engineering program, supplemented by special on-the-job training. Or, the person may be qualified by attaining a combination of at least one year of experience in track inspection in Class 4 and higher and by successfully completing 80 hours of specialized training in the inspection of high speed track provided by the employer or by a college level engineering program, supplemented with on-the-job training. Finally, a person may be qualified by attaining two years of experience in track maintenance in Class 4 and above and by successfully completing 120 hours of specialized training in the inspection of high speed track provided by the employer or by a college level engineering program, supplemented by special on-the-job training provided by the employer with emphasis on the inspection of high speed track. The third option is intended to provide a way for employees with two years of experience in the maintenance of high speed track to gain the necessary training to be qualified to inspect track.

For both categories of qualifications, the person must have experience in Class 4 track or above. To properly maintain and inspect Class 4 track or higher requires a level of knowledge of track geometry and track conditions that are not as readily obtained at lower classes. Persons who are qualified for high speed track must know how to work, maintain, and measure high quality track. Experience in Class 4 track is established as a lower limit to provide a pool of candidates, that may be drawn from freight railroads, who would provide the necessary experience on well-maintained track.

This section also includes specific requirements for qualifications of persons charged with maintaining and inspecting CWR. Training of employees in CWR procedures is essential for high speed operations. Each person inspecting and maintaining CWR must understand how CWR behaves and how to prevent track buckles and other adverse track reactions to thermal and dynamic loading.

Section 213.307—Class of Track: Operating Speed Limits

For several years, passenger service on the Northeast Corridor has operated at 125 m.p.h. under conditional waivers granted by FRA. Amtrak has established specific procedures for this category of speed from which the railroad industry has accumulated valuable knowledge about track behavior in this speed range. The speed of 125 m.p.h. is the natural boundary for the maximum allowable operating speed for Class 7 track. Because trainsets have operated in this country at speeds up to 160 m.p.h. for periods of several months under waivers for testing and evaluation, the maximum limit of 160 m.p.h. is established for Class 8. In the next several years, certain operations, like the Florida Overland Express, may achieve speeds of up to 200 m.p.h. Class 9 track is established

for this possibility. The exceptions for the maximum allowable operating speeds for each class of track parallels the standards for the lower classes, except that a speed of 10 m.p.h over the maximum intended operating speeds is permitted during the qualification phase per Section 213.345.

Although high speed rail is most often considered in terms of passenger travel, non-passenger high speed train service (e.g., the mail trains operated by Amtrak on the Northeast Corridor) is also a possibility. All equipment, whether used for passenger or freight, must demonstrate the same vehicle/track performance and be qualified on the high speed track. Hazardous materials, except for limited and small quantities, may not move in bulk on trains operated at high speeds. The limitations noted are similar to those involved in commercial passenger and freight air travel.

Section 213.309—Restoration or Renewal of Track Under Traffic Conditions

This section addresses two elements of concern: (1) that the stability of the track structure not be significantly degraded and (2) that roadway worker safety not be compromised. For restoration under traffic conditions, this section allows only track maintenance that does not affect the safe passage of trains and involves the replacement of worn, broken, or missing components or fastenings or minor levels of spot surfacing.

Section 213.311—Measuring Track Under Load; Section 213.317 Exemptions; Section 213.319 Drainage; Section 213.321 Vegetation

These sections are identical to the corresponding sections in the standards for track Classes 1 though 5.

Section 213.323—Track Gage

This section introduces limits for change in gage. Analysis has shown that an abrupt change in gage can produce significant wheel forces at high speeds. The minimum and maximum limits for gage values Classes 6, 7, 8 and 9 were set to minimize the onset of truck hunting.

Section 213.327—Alignment

Uniformity is established by averaging the offset values for nine points centered around each point along the track at a spacing specified in the table. Uniformity defined in this way applies anywhere—curves, tangent segments, and spirals. Analysis has shown that points in transition areas such as around the ''point-of-spiral-to-curve'' can be included in this averaging technique. No distinction is made as to where the uniform calculation takes place. Tangent, curve, and spiral transitions have historically been difficult to determine in the field. The use of the uniformity filter obviates the need to make determinations based on the identification of these transitions.

This section provides three chord lengths for different types of vehicle/track interaction modes. Chords of 31-, 62-, and 124-foot lengths provide control of single and multiple defects in the wavelength bands most likely to affect vehicle dynamics and ride quality.

The 62-foot chord was selected because of its proximity to the truck center spacing of most high speed passenger vehicles. In phase carbody resonance modes such as bounce, roll and sway are most affected by track anomalies with a wavelength that is near the truck center spacing. Control of track geometry limits based on the 62-foot chord will help reduce the magnitude of such carbody motion. This chord also is predominantly used for track Classes 1 through 5 and is familiar to track inspection and maintenance personnel.

The 31-foot chord controls short wavelength defects that can result in high wheel forces over a short portion of track. These forces may not produce excessive carbody motion, yet their action on the wheels and truck may cause derailment. Most foreign high speed railroads use a 10-meter chord which is approximately equal in length to the 31-foot chord required in this section.

To control longer wavelengths, most foreign high speed railroads use a 30-or 40-meter chord. The 124-foot chord, which is approximately equal to a 40-meter chord, provides a means to locate and measure longer wavelength track anomalies. These long-wavelength anomalies provide dynamic input to the high speed rail vehicles and can excite carbody resonance modes at high speeds. Excessive carbody motion can lead to poor carbody accelerations and wheel/rail forces, and in the extreme, may also cause derailment.

Addition of this chord length allows measurement of anomalies with wavelengths up to 300 feet. The Japanese National Railway adopted a 40-meter chord after recent speed increases on its Tokaido line. Research and testing indicated a stronger correlation between carbody motion and track geometry limits based on 40-meter mid-chord offsets.

Section 213.329—Curves, Elevation and Speed Limitations

The determination of the maximum speed that a vehicle may operate around a curve is based on the degree of curvature, actual elevation, and amount of unbalanced elevation where the actual elevation and curvature are derived by a moving average technique. This approach is as valid in the high speed regime as in the lower classes. The moving average technique recognizes the steady state (one or two second duration) nature of the Vmax formula.

The maximum operating speed for each curve is determined by the Vmax formula:

$$V_{max} = \sqrt{\frac{E_a + E_u}{0.0007D}}$$

Where

V_{max} = Maximum allowable operating speed (miles per hour).

E_a = Actual elevation of the outside rail (inches).

E_u = Unbalance elevation or cant deficiency

D = Degree of curvature (degrees).

While the cant deficiency proposed in Classes 1 through 5 is three or four inches, cant deficiencies proposed for qualified high speed train are considerably higher. FRA has granted waivers for up to nine inches for revenue service and up to twelve inches for testing for qualified equipment. Higher cant deficiencies are allowed for high speed trains that may include tilting systems. The qualification testing will ensure that the vehicle will not exceed the vehicle/track safety performance limits set forth in this subpart when operating at these higher cant deficiencies.

In order to qualify the vehicle at higher cant deficiencies, the railroad must provide technical testing information using the same procedures that have been used in past years for waivers for higher cant deficiencies. This procedure is commonly called the ''static lean test'' where the vehicle is elevated on one side and wheel loads are measured and the roll angle is determined. Based on acceptable testing information and other technical submissions, FRA will approve the higher cant deficiencies for the specific vehicle type. Equipment that has already been qualified under conditional approval by FRA shall be considered as having complied with this qualification process.

The maximum crosslevel on the outside of a curve is established at seven inches. Elevation in excess of that

amount presents a safety consideration for freight trains with high centers of gravity, operating at lower speeds in the curve.

Section 213.331—Track Surface

The chord lengths in the table are selected for the same reasons discussed in § 213.327 (alignment). The multiple chords measure different surface anomaly wavelengths.

The surface table addresses both single and multiple events. Studies have shown that the smaller limits are necessary when surface anomalies repeat themselves three more times over the specified chord length. The parameter commonly called ''warp,'' the difference in crosslevel between any two points, does not require a specific limit for repeated warp conditions at high speeds.

Section 213.333—Automated Vehicle Inspection Systems

Technology is available today to perform three essential tasks necessary for high speed train operation: track geometry measuring systems (TGMS), gage restraint measuring systems (GRMS), and vehicle/track performance measuring systems. The vehicle/track performance systems encompass both acceleration and wheel force measurements. These functions may be combined in the same or different vehicles. This section provides for the implementation of these systems.

The GRMS is primarily used on timber-tied track of certain freight railroads, to evaluate the effectiveness, on a continuous basis, of rail/tie fastening systems. This section requires the use of GRMS in Classes 8 and 9 to measure the gage restraint of the track, including the strength of the ties and the ability of the fastenings to maintain gage. Specified safety limits were established after testing on the Northeast Corridor where the track is predominately concrete-tied with timber tie turnouts. GRMS on concrete ties is effective in identifying defective ties and conditions with missing fasteners or a relaxation of toe load of gage-side rail fasteners. GRMS is required in Classes 8 and 9 to measure the resistance of the track to forces generated by wheel flanging in the gaging space. The use of the GRMS is necessary to insure sufficient gage restraint at the gage limits set to control truck hunting.

Railroads that operate trains at speeds above 110 mph universally employ automatic track geometry measuring systems to generate data to point out train safety hazards in the track structure. Reliance on only visual inspections to locate small track irregularities is difficult. In France, track geometry measuring vehicles are operated quarterly over high speed lines for the purpose of collecting track maintenance data. Track safety inspections are based on the exercise of an instrumented vehicle drawn from the high speed fleet. The French National Railroad (SNCF), exhibits confidence in relying on truck and carbody performance specifications to guarantee safe behavior at the wheel/rail interface and this initiative has been proven in service.

This section requires vehicle/track measurements to be made by truck frame accelerometers and carbody accelerometers, and by instrumented wheelsets to measure wheel/rail forces. Functional truck side and carbody accelerometers are required in at least two vehicles in each train in Classes 8 and 9. The track owner is required to have in effect written procedures for the notification of track forces when the devices indicate a possible track-related condition. An instrumented car in Classes 7, 8 and 9, or a portable device that monitors on-board instrumentation on trains, must be operated at the revenue speed profile at the specified frequency to monitor carbody and truck frame accelerations to ensure that the vehicle/track performance limits contained in this section are not exceeded.

For Classes 8 and 9, a car equipped with instrumented wheelsets must be operated annually to ensure that the wheel/rail force safety limits are not exceeded.

The safety limits contained in the Vehicle/Track Interaction Performance Limits table were derived from technical literature, years of research, experience by foreign railroads, and computer simulation and validation. They must not be exceeded either during the qualification phase required under § 213.345 or in the periodic measurement of accelerations and wheel/rail forces required in this section.

The minimum vertical wheel load safety limit is 10 percent of the static vertical wheel load. The static vertical wheel load is defined as the load that the wheel would carry while stationary on level track. This safety criteria assures that no excessive wheel unloading is experienced by any wheel on the operating vehicle. Significant wheel unloading greatly increases the risk of derailment in the dynamic environment of a vehicle traveling at high speed.

The ratio of the lateral force that any wheel exerts on an individual rail to the vertical force exerted by the same wheel on the rail (L/V ratio) is limited by the Nadal formula. The limit on any wheel's L/V ratio ensures that the risk of a wheel climb derailment is minimized. The wheel flange angle δ referenced in the formula should correspond to actual measurements of wheel flange angle as provided by the requirements of the vehicle qualification testing specified in § 213.345.

The net axle lateral force exerted by any axle on the track should not exceed 50 percent of the static vertical load exerted by the same axle. This safety criteria ensures that no excessive track panel shift or misalignment is produced by the moving vehicle. For vehicles operating at high speeds, track panel shift can produce unsafe carbody and/or truck motion and, in the extreme, can cause derailment.

The ratio of the lateral forces that the wheels on one side of any truck exert on an individual rail to the vertical forces exerted by the same wheels on that rail must not exceed 0.60. This limit ensures that the risk of a rail rollover derailment is minimized.

The lateral carbody peak-to-peak acceleration (defined by the algebraic difference between the two extreme values of measured acceleration within a one-second duration) is limited to 0.5g. Carbody lateral accelerations above this limit reflect a very poor ride quality and a degraded track and/or vehicle condition.

The vertical carbody peak-to-peak acceleration (defined by the algebraic difference between the two extreme values of measured acceleration within a one-second duration) is limited to 0.6g. Carbody vertical accelerations above this limit also reflect a poor ride quality and a degraded track and/or vehicle condition.

The Root Mean Square (RMS) of the lateral truck acceleration for any two-second duration is limited to 0.4 g. This safety limit ensures that no sustained truck hunting is experienced by the moving vehicle. Sustained truck hunting produces undesirable ride quality and significantly increases the risk of derailment. The RMS of the lateral truck acceleration must be calculated over a two-second window from which the mean value of the acceleration has been removed.

The vertical truck zero-to-peak acceleration is limited to 5.0 g. Exceeding this safety limit can indicate undesirable short wavelength track anomalies.

Ultimately, vehicle/track interaction safety is assured by controlling wheel/rail forces to safe limits. Appropriate limits for track geometry and vehicle response acceleration provide strong

indications of the likely wheel/forces which would be produced by operating trains. Use of an instrumented wheelset also provides a level of safety assurance for new and unusual vehicle designs that differ from the conventional vehicle dynamic models that were used to develop the track geometry and vehicle/track interaction limits.

Section 213.335—Crossties

Various types of crossties may be installed in high speed track provided that the ties maintain the proper gage, surface and alignment. Slab track (track imbedded in concrete) or other construction may also be used if the construction complies with the requirements of this section. Because of the wide use of concrete ties in high speed track throughout the world, this section establishes safety requirements for concrete ties.

The requirements for ties in this subpart differ from those in the corresponding section for crossties in Classes 1 through 5. For non-concrete-tied construction, the requirements for ties parallel those of the lower standards except that permissive lateral movement of tie plates is set at ⅜ inch instead of ½ inch and a requirement for rail holding spikes is added.

For concrete-tied track, effective ties must not exhibit the known failure modes listed. These failure modes were derived largely from experience in the Northeast Corridor. The number and distribution requirements of both non-concrete ties and concrete ties is more stringent than the requirements for the lower classes. For example, 14 effective concrete crossties in Class 6 and 16 effective concrete ties are required in Classes 7, 8 and 9 in each 39-foot segment of track. For both concrete and timber construction, a minimum number of non-defective ties is specified on each side of a defective tie.

Section 213.337—Defective Rails

The requirements for the identification of rail flaws and appropriate remedial action are valid in high speed track classes as well as the lower track classes. This section is unchanged from the standards for the lower classes except that language references to specific lower classes are deleted as unnecessary. If severe rail surface conditions (such as corrugation, shelling, spalling, and checking) occur in high speed lines, they likely will lead to degraded vehicle/track performance and require the track owner to reduce speeds. Therefore, remedial requirements for these conditions are the same as those for the lower track classes. The flattened rail head is especially important to identify in high speed track because of the adverse effect on track geometry cause by the short anomaly of a depression in the rail.

Section 213.339—Inspection of Rail in Service

A continuous search for internal rail defects must be made of all rail in track in track Classes 6, 7, 8 and 9 at a frequency of twice per year. This requirement is consistent with the frequency used on Amtrak's Northeast Corridor (essentially, Class 6 and 7) and as well as the approach used in France which inspects rails are in the track twice a year. The same requirements for Classes 1 through 5 apply if a rail flaw inspection cannot be made over a particular segment of track.

Section 213.341—Initial Inspection of New Rail and Welds

This section provides for the initial inspection of new rail, either at the mill or within 90 days after installation, and for the initial inspection of new welds made in new or used rail. It also provides for alternatives for these inspections. Compliance with the initial inspection of new rail and welds may be demonstrated by in-service inspection, mill inspections, welding plant inspections, and inspections of field welds.

Section 213.343—Continuous Welded Rail (CWR)

As with CWR for the lower classes of track, FRA will review the railroad's written procedures for the installation, adjustment, maintenance and inspection of CWR, and training for the application of these procedures.

Section 213.345—Vehicle Qualification Testing

All rolling stock, both passenger and freight, must be qualified for operation for its intended class. This section ''grandfathers'' equipment that has already operated in the specified classes. Rolling stock operating in Class 6 within one year prior to the promulgation of this rule shall be considered as qualified. Vehicles operating at Class 7 speeds prior to the promulgation of the rule under conditional waivers are qualified for Class 7. This includes equipment that is presently operating on the Northeast Corridor at Class 7 speeds.

The qualification testing will ensure that the equipment will not exceed the vehicle/track performance limits specified in § 213.333 at any speed less than 10 m.p.h. above the proposed maximum operating speed. Testing at a maximum speed at least 10 m.p.h. above the proposed operating speed is required. The test report must include the design flange angle of the equipment that will be used for the determination of the lateral to vertical wheel load safety limit for the vehicle/track performance measurements required in § 213.333(k).

Subsection (d) requires the operator to submit an analysis and description of the signal system and operating practices to govern operations in Classes 7, 8 and 9. This submission will include a statement of sufficiency in these areas for the class of operation intended. Based on test results and submissions, FRA will approve a maximum train speed and value of cant deficiency for revenue service.

Section 213.347—Automotive or Railroad Crossings at Grade

There are no highway or railroad grade crossings on the Amtrak route between Washington, DC and New York City. Much of this line is operated by revenue passenger trains at 125 m.p.h. (Class 7 speeds). Highway crossings and railroad crossings at grade (diamonds) may not be present in Class 8 and 9 track.

Technology currently is being developed that would prevent inappropriate intrusion of vehicles onto the railroad rights-of-way. This technology involves the use of barrier systems with intrusion detection and train stop, as well as advance warning systems. Because the technology is under development, it would be premature to include specific requirements for barrier systems and related technology in this section. However, the railroad is required to submit for approval a description of the crossing warning system for each crossing.

Section 213.349—Rail End Mismatch

Vertical or horizontal mismatch of rails at joints must be less than one-eighth of an inch for Classes 6 through 9. A more restrictive criteria is not necessary and would be impractical.

Section 213.351—Rail Joints

This section is less permissive than its counterpart for the lower speed classes. Fracture mechanics tests and analyses demonstrate that there is no place in the high speed train operating regime for defective joint bars. The propagation rate of a crack large enough to be visible in a joint bar is unpredictable. Once a joint bar has ruptured, its companion joint bar is immediately in danger of overload. Upon discovery of a defective joint bars, the track owner must reduce the track class at the location of the

defective bar and proceed according to the requirements of Subpart D.

Section 213.353—Turnouts and Crossovers, Generally

The requirements in this section are similar to those in the lower classes. Fastenings must be intact and maintained so as to keep the components securely in place. Each switch, frog, and guard rail must be free of obstructions that may interfere with the passage of wheels. Rail anchoring is required to restrain rail movement affecting the position of switch points and frogs.

Experience in this country with the maintenance of turnouts and crossovers in high speed territories is limited. The use of conventional switch and frog components in present-day 125 m.p.h. track can produce harsh vehicle response which, while not necessarily unsafe, is likely to be less and less welcome in the future, particularly at train speeds above 125 m.p.h.

Worldwide, the trend for turnouts and crossovers in high speed lines is toward reliance on long switch points and moveable point frogs. Amtrak has some limited experience with these features at fairly high train speeds, and the western coal railroads have a great deal of experience, especially with moveable point frogs, with turnout component performance in low speed, cumulative tonnage conditions. This section requires that the track owner, intending to operate trains at high speeds, to develop a turnout and inspection handbook for the instruction of employees involved in this work. Requirements for switches, frogs, and spring frogs that are present in the standards for the lower classes are not specifically listed, but will be addressed in the railroad's Guidebook.

The purpose of such a document is to encourage formal consideration of problems associated with inspection and maintenance of these track features and to establish a consistent system approach to the performance of related work.

Section 213.355—Frog Guard Rails and Guard Faces; Gage

The most restrictive practical measurements for these important parameters are included. The limits for guard check and guard face gage are set at a limit that permits minimal wear.

Section 213.357—Derails

Because it is essential that railroad rolling stock be prevented from fouling the track in front of a high speed train, this section presents strict requirements for derails to be fully functional and linked to the signal systems.

Section 213.359—Track Stiffness

Track must have sufficient vertical strength and lateral strength to withstand the maximum loads generated at maximum permissible train speeds, cant deficiency and lateral or vertical defects so that the track will return to a configuration in compliance with the track performance and geometry requirements of this subpart. It is imperative that the track structure is structurally qualified to accept the loads without unacceptable deformation.

Section 213.361—Right-Of-Way

This section requires the track owner to submit a barrier plan, termed a ''right-of-way plan,'' to FRA for approval. The plan will include, at a minimum, provisions in areas of demonstrated need to address the prevention of vandalism by trespassers and intrusion of vehicles from adjacent rights of way. A particular form of vandalism, the launching of objects from overhead bridges or structures, is specifically listed.

Section 213.365—Visual Inspections

Visual inspections are considered to be an important component of the railroad's overall inspection program. The section largely parallels the requirements for the lower classes. The inspection requirements are twice weekly for Classes 6, 7 and 8 and three times per week for Class 9. Turnouts and crossovers must be inspected in accordance with the Guidebook required under § 213.353. The practice in France of operating a train at reduced speeds following a period with no train traffic is adopted in this section.

Section 213.367—Special Inspections

The requirements of this section are the same as those for the lower track classes except that the occurrence of temperature extremes is specifically listed as an event that requires a track inspection.

Section 213.369—Inspection Records

The requirements of this section are the same as those for the lower track classes.

Environmental Impact

FRA has evaluated these proposed regulations in accordance with its procedures for ensuring full consideration of the potential environmental impacts of FRA actions, as required by the National Environmental Policy Act (42 U.S.C. 4321 *et seq.*) and related directives. These proposed regulations meet the criteria that establish this as a non-major action for environmental purposes.

Appendix

FRA plans to revise Appendix B to Part 213—Schedule of Civil Penalties, to include penalties for violations of the provisions of Subpart G and to be included in the final rule. Because such penalty schedules are statements of policy, notice and comment are not required prior to their issuance. See 5 U.S.C. 553(b)(3)(A). Nevertheless, interested parties are welcome to submit their views on what penalties may be appropriate.

Regulatory Impact

Executive Order 12866 and DOT Regulatory Policies and Procedures

This proposed rule has been evaluated in accordance with existing policies and procedures. It is considered to be significant under both Executive Order 12866 and DOT policies and procedures (44 FR 11034, February 26, 1979) because of substantial public interest and safety implications. FRA has prepared and placed in the docket a regulatory analysis addressing the economic impact of the rule. Document inspection and copying facilities are available at 1120 Vermont Avenue, N.W., Seventh Floor, Washington, D.C. Photocopies may also be obtained by submitting a written request to the FRA Docket Clerk at the Office Chief Counsel, Federal Railroad Administration, 400 Seventh Street, S.W., Mail Stop 10, Washington, D.C. 20590.

FRA's economic analysis showed that there was less certainty about the economic impact of the proposed rule than would be the case for a rule developed within an agency, rather than through the RSAC process. The proposed standards were developed by consensus among members of a Working Group of the Rail Safety Advisory Committee (RSAC). The RSAC process affects the shape of the rule very dramatically, because the process relies on a consensus to adopt recommendations. It also permits input on variables for which little data exists. Therefore, neither the underlying rule nor this analysis could assume the shape they would have had the more traditional rulemaking process been followed. Further, the RSAC process resulted in many unrelated changes to individual sections, which were best analyzed section-by-section. In its conclusion, the FRA finds that the net effect is an increase in safety and an increase in the burden on the railroads,

but that the burden on the railroads is not likely to be as great as the benefit, although there was no way to quantify the magnitude on the net benefit.

The Track Working Group formed, reached a consensus on internal working procedures, and addressed the issues. Several issues were delegated to task groups, which are subgroups of the working group. The procedure remained the same. The task groups could make no recommendations until they had a consensus. The working group would not adopt any recommendation, even if a result of a consensus in the task group, until there was a consensus in the working group. The full RSAC would make no recommendation to the Administrator until there was a majority consensus in the full RSAC, even if there was a consensus in the working group.

An implication of this is that no entity's representative would accept a consensus agreement, unless the entity he or she represent would be at least as well off after the agreement as it had been before. This analysis therefore uses as a fundamental assumption that there are no provisions which will impose drastic costs on any segment represented by members of the Working Group, and Pareto superiority of the proposal over the current rules. Pareto superiority implies that no party would be willing to pay to return to the current standards, although some party might be indifferent between the current standards and the proposal. There is no implication that the proposal is Pareto optimal, although Pareto optimality has not been excluded. Were the proposal Pareto optimal, there would not exist another possible set of rules which at least one party would be willing to pay to adopt, and the amount that party would be willing to pay would be sufficient, were it given to other parties, to induce them to agree to the set of rules. Nor is the proposal assumed to be optimal. Were it optimal the total net benefit would be maximized.

The guidance in E.O. 12866 is that we should select the rule with the maximum net benefit. We cannot know if we have done that here. What we know is that the proposal is closer to the optimum than the current rules. The guidance in the Regulatory Flexibility Act is that we should adopt rules which are flexible, fitting in with how businesses actually conduct operations, and being sensitive to the concerns of small businesses. Clearly the RSAC process does this.

Involvement of Small Entities

All of the small entities directly affected by this rule are short line railroads. They are represented by the American Short Line Railroad Association (ASLRA). They were members of the working group that developed this proposal, and of all of the smaller Task Groups addressing particular subsets of issues in which they were interested. They were not, of course, involved in developing those standards which would not apply to any of their members, for example the high speed track standards. The ASLRA agreed to the proposal, as did all members of the working group.

Earlier in the process, the FRA published an ANPRM that called for four workshops, held January through March 1993. The ASLRA also participated in all of those workshops.

In addition, several short line railroads participated directly in both the workshops and the Working Group. All of the individual short line railroads participating in the Working Group agreed to the proposal.

Almost every change in the proposal will enhance safety. Some provisions will reduce burdens, but in most cases the burden is increased, and almost all of the burden falls on the railroads. In those cases where the burden increased, the railroads participating in the process arranged the additional burden so that it would have the least adverse impact. Many of the newly prohibited track conditions are rare or nonexistent. The impact on small entities was considered at every step, and phase in periods were used to mitigate the effect on them when they were affected by the crosstie standard and the new gage standard for excepted track. There is no clear way to measure the net effect of the proposal, although it seems likely the net benefit will be positive. The RSAC process was intended to take rulemaking into areas where data is sparse, and the end product, as might be expected, is difficult to quantify.

Federalism Implications

This proposed rule has been analyzed according to the principles of Executive Order 12612 (''Federalism''). It has been determined that these proposed amendments to Part 213 do not have federalism implications. As noted previously, the U.S. Supreme Court, in *CSX* v. *Easterwood*, upheld Federal preemption of any state or local attempts to regulate train speed. Nothing in this notice proposes to change that relationship. Likewise, the proposed addition to Part 213's requirement for vegetation maintenance near grade crossings is not intended to preempt any similar existing state or local requirements. The provisions that require railroads seeking to operate in Classes 8 and 9 to have a program addressing vandalism and trespassing are directed only to the railroads, and not to state or local governments. If a railroad is unable to provide an adequate program to address these issues, it will not be allowed to operate at Classes 8 and 9 speeds. For these reasons, the preparation of a Federalism Assessment is not warranted.

Regulatory Flexibility Act

This notice contains a summary of an initial regulatory flexibility analysis (IRFA) as required by the provisions of the Regulatory Flexibility Act at 5 U.S.C. §§ 601–612. FRA completed an IRFA as part of an economic analysis of costs and benefits, and placed of copy of the IRFA in the docket for this proceeding.

1. Why action by the agency is being considered

The Rail Safety Enforcement and Review Act of 1992, Public Law 102–365, 106 Stat. 972 (September 3, 1992), later amended by the Federal Railroad Safety Authorization Act of 1994, Public Law 103–440, 108 Stat. 4615 (November 2, 1994), requires FRA to revise the track safety regulations contained in 49 CFR Part 213. Now codified at 49 U.S.C. § 20142, the amended statute requires:

''(a) Review of Existing Regulations.—Not later than March 3, 1993, the Secretary of Transportation shall begin a review of Department of Transportation regulations related to track safety standards. The review at least shall include an evaluation of—

(1) procedures associated with maintaining and installing continuous welded rail and its attendant structure, including cold weather installation procedures;

(2) the need for revisions to regulations on track excepted from track safety standards; and

(3) employee safety.

(b) Revision of Regulations.—Not later than September 1, 1995, the Secretary shall prescribe regulations and issue orders to revise track safety standards, considering safety information presented during the review under subsection (a) of this section and the report of the Comptroller General submitted under subsection ''(c)'' of this section.

* * * * *

(d) Identification of Internal Rail Defects.—In carrying out subsections (a) and (b), the Secretary shall consider whether or not to prescribe regulations and issue orders concerning—

(1) inspection procedures to identify internal rail defects, before they reach

imminent failure size, in rail that has significant shelling; and

(2) any specific actions that should be taken when a rail surface condition, such as shelling, prevents the identification of internal defects.''

The reasons for the actual provisions of the action considered by the agency are explained in the body of the analysis.

2. The objectives and legal basis for the proposed rule

The objective of the proposed rule is to enhance the safety of rail transportation, protecting both those traveling and working on the system, and those off the system who might be adversely affected by a rail accident. The legal basis is reflected in the response to 1. above and in the preamble.

3. A description of and an estimate of the number of small entities to which the proposed rule would apply

The proposed rule would apply to railroads. Small entities among affected railroads would all be short line railroads. There are approximately 700 short line railroads in the United Sates, but many of them are not small entities, either because they are large enterprises as railroads, or because they are operations of large entities in other industries.

4. A description of the projected reporting, recordkeeping and other compliance requirements of the proposed rule, including an estimate of the classes of small entities which will be subject to the requirement and the type of professional skills necessary for preparation of the report or record

See the Paperwork Reduction Act analysis.

5. Federal rules which may duplicate, overlap, or conflict with the proposed rule

None.

Significant alternatives:

1. Differing compliance or reporting requirements or timetables which take into account the resources available to small entities

In the two sections most likely to affect small entities, § 213.4 Excepted Track and § 213.109 Crossties, the proposal includes a two year phase-in period.

2. Clarification, consolidation, or simplification of compliance and reporting requirements under the rule for such small entities

Although their needs were considered at every step of the process, there was no way to reduce the burden on small entities that did not apply as well to larger entities.

3. Use of performance, rather than design standards

Where possible, especially in the geometry standards, the standards were tied to performance. Although they were expressed as specifications, the underlying performance model ensures that they will have the same effect as a performance standard would. In the high speed standards, vehicle qualification is expressed strictly as a performance standard.

4. Exemption from coverage of the rule, or any part thereof, for such small entities

There was no practicable way to exclude small entities. Further, the low volume operations of the largest railroads often serve shippers which are small entities, and any additional burden on the low volume lines of large railroads would likely have adverse impacts on those small shippers.

Small Business Regulatory Enforcement Fairness Act

In 1996, Congress enacted the Small Business Regulatory Enforcement Fairness Act (SBREFA) which, in part, amended the Regulatory Flexibility Act to require Federal agencies to focus additional attention on the economic impacts of proposed rules and new final rules on small entities. The act requires agencies to consult with small businesses and with the Small Business Administration, which FRA did prior to publication of this notice.

FRA's outreach to small entities included securing the participation of several short lines and the ASLRA in workshops held under the original ANPRM. FRA also benefitted from the advice and participation of ASLRA and several short line railroads whose representatives were members of the RSAC and the Track Working Group.

FRA did not quantify the estimated annual cost to the average firm, nor compare it to average annual revenue or profits, because the relative impact of the proposed rule varies more by condition of the track owned by a railroad than by the size of the railroad. Railroads with better, safer track will face proportionally much smaller effects from the proposed rule. The average annual total cost is likely to be less than $2,000,000 per year for the entire railroad industry, with more than half of the cost borne by large railroads. The average burden per small railroad is likely therefore to be less than $1,500 per year. The burden will be greater on railroads with more track, and lower on railroads with less. FRA welcomes any additional data on this subject.

No provision included in this proposed rule will have a very adverse impact on the affected firms. A proposal which would have had a large beneficial impact, the GRMS as an alternative to the crosstie standard. (*See* previous discussion in the preamble to this notice.) Some provisions which at first impression seem to have a significant impact, such as an increase in the number of required crossties, in fact will have little impact.

For example, this proposal includes an increase in the number of crossties required on curved track. In a worst case, about 30 percent of the Class 1 track of a very small entity might not comply with the requirement for six ties per 39-foot section of rail. Of this, 80 percent would not comply with geometry standards or standards affecting effective distribution of ties, which likely would be fixed by adding enough ties to comply or exceed the proposed standard. The remaining track, about six percent of all track, would not have sufficient ties to meet the proposed standard. Some of this track would not meet the current standard. One tie per section for six percent of the track would be slightly more than eight ties per mile. At a cost of $40 per tie installed, this would mean a cost of about $320 per mile, for a worst case. A railroad with track this poor would have presented a serious safety hazard in the first place, and would not be representative. Most small railroads currently exceed the proposed standard. A more detailed description of the impact is contained in the complete IRFA, found in the docket for this proceeding.

In several places in this notice, FRA asks for additional information on benefits and costs. In the Track Working Group, and at meetings of task groups assigned to work on particular issues, FRA repeatedly asked participating parties for any data which might support the recommendations. On occasion, participants shared such data with FRA, most notably the ASLRA which conducted a survey of its members to analyze the potential impact of increasing the number of crossties required in a 39-foot segment of track. At other times, data were not shared with FRA, and the agency was unable to determine whether the information was withheld for proprietary reasons or whether it simply was not available.

While the negotiations at times may have created incentives for parties not to disclose parametric data, such as how many torch cut rails are in service (a

number which the railroads might not be able to generate if they wanted to), at other times parties were forced to reveal non-parametric data in the form of preferences. By voting to accept a provision in the proposal, often as part of a compromise with other interested parties, the parties' acceptance of a package of compromises revealed that they preferred the compromise position to a position of no compromise (the existing rule with the possibility of some other rulemaking activity). This implied that the burdens which rail management representatives accepted likely were not significant. Details of provisions that will have little or no impact may be found in the complete IRFA, found in the docket for this proceeding.

In general, the Track Working Group did not proffer many alternatives to the provisions of this proposal. In most cases, members agreed on the subject matter, but disagreed about the stringency of the standard. For example, everyone agreed that track ought to be inspected. However, the group debated about the most effective inspection intervals, and about how much track one inspector can inspect. Thus, the alternatives discussed in this context concerned greater or lesser required inspection frequencies and limitations or removal of limitations of the amount of track one inspector can inspect.

One significant alternative discussed by the group at length was the use of GRMS as an alternative to crosstie standards. (*See* more complete discussion of GRMS in other sections of this preamble and in the IRFA.)

Paperwork Reduction Act

The information collection requirements in this proposed rule have been submitted for approval to the Office of Management and Budget (OMB) under the Paperwork Reduction Act of 1995, 44 U.S.C. 3501 *et seq.* The sections that contain the new information collection requirements and the estimated time to fulfill each requirement are as follows:

CFR section	Respondent universe	Total annual responses	Average time per response	Total annual burden hours	Total annual burden cost
213.4 Excepted Track					
Designation of track as excepted	160 railroads	32 designations	15 minutes	8 hours	$240
Notification to FRA about removal of excepted track.	160 railroads	40 notifications	10 minutes	7 hours	210
213.5—Responsibility of track owners	620 railroads	16 notifications	8 hours	120 hours	3,600
213.7 Designation of qualified persons to supervise certain renewals and inspect track					
Designations	620 railroads	1,500 names	10 minutes	250 hours	7,500
Notification and dispatched to location.	N/A	N/A	Usual and customary procedure.	N/A2	N/A
213.17 Exemptions	620 railroads	4 petitions	24 hours	96 hours	2,880
213.57 Curves, elevation and speed limitations					
Request to FRA for approval	620 railroads	3 requests	40 hours	120 hours	3,600
Notification to FRA with written consent of other affected track owners.	620 railroads	2 notifications	45 minutes	1.5 hours	45
213.119 Continuous welded rail (CWR), general					
Written procedures	110 railroads	110 procedures	40 hrs Class I RRS 16 hrs. Class II RRs.	2,000 hours	60,000
Training Program	110 railroads	110 programs	40 hrs Class I RRs 8 hrs Class II RRs.	1,200 hours	36,000
Recordkeeping	110 railroads	4,500 records	10 minutes	750 hours	22,500
213.122 Torch cut rail	20 railroads	2,000	5 minutes	167 hours	5,010
213.233 Track inspections	620 railroads	2,500 inspections	1 minute	41.5 hours	1,079
213.237 Inspection of rail	N/A	N/A	Usual and customary procedure.	N/A	N/A

CFR section	Respondent universe	Total annual responses	Average time per response	Total annual burden hours	Total annual burden cost
213.241 Inspection records	620 railroads	Varies	Varies	1,763,991 hours	52,919,730
213.303 Responsibility for Compliance	2 railroads	1 petition	8 hours	8 hours	240
213.305 Designation of qualified individuals; general qualifications.	2 railroads	150 qualifications	10 minutes	25 hours	750
213.317—Exemptions	2 railroads	1 petition	24 hours	24 hours	720
213.329 Curves, elevation and speed limitations					
FRA approval of qualified equipment and higher curving speeds.	2 railroads	1 notification	40 hours	40 hours	1,200
Written notification to FRA with written consent of other affected track owners.	2 railroads	1 notification	45 minutes	45 minutes	22.50
213.333 Automated Vehicle Inspection System					
Track Geometry Measurement System.	3 railroads	18 reports	20 hours	360 hours	9,360
Track/Vehicle Performance Measurement System.	1 railroad	1 program	8 hours	8 hours	240
Written procedures	2 railroads	13 printouts	20 hours	260 hours	7,800
copies of most recent exception printouts.					
213.339 Inspection of rail in service	N/A	N/A	Usual and customary procedure.	N/a	N/A
213.341 Initial inspection of new rail and welds					
Mill inspection	2 railroads	1 report	8 hours	8 hours	240
Welding plan inspection	2 railroads	2 reports	8 hours	16 hours	480
Inspection of field wells	2 railroads	200 records	20 minutes	67 hours	2,010
Marking of defective rail	N/A	N/A	Usual and customary procedure.	N/A	N/A
213.343 Continuous welded rail (CWR)					
-Written procedures	2 railroads	2 procedures	40 hours	80 hours	2,400
Training program	2 railroads	2 programs	40 hours	80 hours	2,400
Recordkeeping	2 railroads	200 records	10 minutes	33 hours	990
213.345 Vehicle qualification	1 railroad	1 report	16 hours	16 hours	480
213.353 Turnouts and crossovers, generally.	1 railroad	1 guidebook	40 hours	40 hours	1,200
213.361 Right of Way	1 railroad	1 plan	40 hours	40 hours	1,200
213.369 Inspection Records					
Record of inspection	2 railroads	500 records	1 minute	8 hours	208
Designation of location where record should be maintained.	2 railroads	2 designations	15 minutes	30 minutes	15
Internal defect inspections and remedial action taken.	2 railroads	50 records	5 minutes	4 hours	104

All estimates include the time for reviewing instructions; searching existing data sources; gathering or maintaining the needed data; and reviewing the information. Pursuant to 44 U.S.C. § 3506(c)(2)(B), the FRA solicits comments concerning: (1) whether these information collection requirements are necessary for the proper performance of the function of FRA, including whether the information has practical utility; (2) the accuracy of FRA's estimates of the burden of the information collection requirements; (3) the quality, utility, and clarity of the information to be collected; and (4) whether the burden of collection of information on those who are to respond, including through the use of automated collection techniques or other forms of information technology, may be minimized. For information or a copy of the paperwork package submitted to OMB, contact Gloria Swanson at (202)632–3318.

Organizations and individuals desiring to submit comments on the collection of information requirements should direct them to the Office of Management and Budget, Attention: Desk Officer for the Federal Railroad Administration, Office of Information and Regulatory Affairs, Washington, D.C. 20503, and should also send a copy of their comments to Gloria D. Swanson Eutsler, Federal Railroad Administration, RRS–211, 400 Seventh Street, S.W., Mail Stop 25, Washington, D.C. 20590.

OMB is required to make a decision concerning the collection of information requirements contained in this final rule between 30 and 60 days after publication of this document in the **Federal Register**. Therefore, a comment to OMB is best assured of having its full effect if OMB receives it within 30 days of publication. The final rule will respond to any OMB or public comments on the information collection requirements contained in this proposal.

FRA cannot impose a penalty on persons for violating information collection requirements which do not display a current OMB control number, if required. FRA intends to obtain current OMB control numbers for any new information collection requirements resulting from this rulemaking action prior to the effective date of a final rule. The OMB control number, when assigned, will be announced by separate notice in the **Federal Register**.

List of Subjects in 49 CFR Part 213

Penalties, Railroad safety, Reporting and recordkeeping requirements.

The Proposed Rule

In consideration of the foregoing, FRA proposes to revise Part 213, Title 49, Code of Federal Regulations as follows:

PART 213—TRACK SAFETY STANDARDS

Subpart A—General

Sec.
213.1 Scope of part.
213.2 Preemptive effect.
213.3 Application.
213.4 Excepted track.
213.5 Responsibility of track owners.
213.7 Designation of qualified persons to supervise certain renewals and inspect track.
213.9 Classes of track: operating speed limits.
213.11 Restoration or renewal of track under traffic conditions.
213.13 Measuring track not under load.
213.15 Civil penalty.
213.17 Exemptions.

Subpart B—Roadbed

213.31 Scope.
213.33 Drainage.
213.37 Vegetation.

Subpart C—Track Geometry

213.51 Scope.
213.53 Gage.
213.55 Alignment.
213.57 Curves; elevation and speed limitations.
213.59 Elevation of curved track; runoff.
213.63 Track surface.

Subpart D—Track Structure

213.101 Scope.
213.103 Ballast; general.
213.109 Crossties.
213.113 Defective rails.
213.115 Rail end mismatch.
213.119 Continuous welded rail (CWR); general.
213.121 Rail joints.
213.122 Torch cut rail.
213.123 Tie plates.
213.127 Rail fastening systems.
213.133 Turnouts and track crossings generally.
213.135 Switches.
213.137 Frogs.
213.139 Spring rail frogs.
213.141 Self-guarded frogs.
213.143 Frog guard rails and guard faces; gage.

Subpart E—Track Appliances and Track-Related Devices

213.201 Scope.
213.205 Derails.

Subpart F—Inspection

213.231 Scope.
213.233 Track inspections.
213.235 Switch and track crossing inspections.
213.237 Inspection of rail.
213.239 Special inspections.
213.241 Inspection records.

Subpart G—Train Operations at Track Classes 6 and Higher

213.301 Scope of subpart.
213.303 Responsibility for compliance.
213.305 Designation of qualified individuals; general qualifications.
213.307 Class of track; operating speed limits.
213.309 Restoration or renewal of track under traffic conditions.
213.311 Measuring track not under load.
213.317 Exemptions.
213.319 Drainage.
213.321 Vegetation.
213.323 Track gage.
213.327 Alignment.
213.329 Curves, elevation and speed limitations.

213.331 Track surface.
213.333 Automated vehicle inspection systems.
213.335 Crossties.
213.337 Defective rails.
213.339 Inspection of rail in service.
213.341 Initial inspection of new rail and welds.
213.343 Continuous welded rail (CWR).
213.345 Vehicle qualification testing.
213.347 Automotive or railroad crossings at grade.
213.349 Rail end mismatch.
213.351 Rail joints.
213.352 Torch cut rail.
213.353 Turnouts and crossovers, generally.
213.355 Frog guard rails and guard faces; gage.
213.357 Derails.
213.359 Track stiffness.
213.361 Right of way.
213.365 Visual inspections.
213.367 Special inspections.
213.369 Inspection records.
Appendix A to Part 213—Maximum Allowable Curving Speeds
Appendix B to Part 213—Schedule of Civil Penalties

Authority: 49 U.S.C. 20103 and 20142; 49 CFR 1.49(m).

Subpart A—General

§ 213.1 Scope of part.

This part prescribes minimum safety requirements for railroad track that is part of the general railroad system of transportation. The requirements prescribed in this part apply to specific track conditions existing in isolation. Therefore, a combination of track conditions, none of which individually amounts to a deviation from the requirements in this part, may require remedial action to provide for safe operations over that track.

§ 213.2 Preemptive effect.

Under 49 U.S.C. 20106 (formerly § 205 of the Federal Railroad Safety Act of 1970, 45 U.S.C. 434), issuance of these regulations preempts any State law, rule, regulation, order, or standard covering the same subject matter, except a provision directed at an essentially local safety hazard that is consistent with this part and that does not impose an undue burden on interstate commerce.

§ 213.3 Application.

(a) Except as provided in paragraph (b) of this section, this part applies to all standard gage track in the general railroad system of transportation.

(b) This part does not apply to track——

(1) Located inside an installation which is not part of the general railroad system of transportation; or

(2) Used exclusively for rapid transit service in a metropolitan or suburban area.

§ 213.4 Excepted track.

A track owner may designate a segment of track as excepted track provided that——

(a) The segment is identified in the timetable, special instructions, general order, or other appropriate records which are available for inspection during regular business hours;

(b) The identified segment is not located within 30 feet of an adjacent track which can be subjected to simultaneous use at speeds in excess of 10 miles per hour;

(c) The identified segment is inspected in accordance with §§ 213.233(c) and 213.235 at the frequency specified for Class 1 track;

(d) The identified segment of track is not located on a bridge including the track approaching the bridge for 100 feet on either side, or located on a public street or highway, if railroad cars containing commodities required to be placarded by the Hazardous Materials Regulations (49 CFR Part 172), are moved over the track; and

(e) The railroad conducts operations on the identified segment under the following conditions:

(1) No train shall be operated at speeds in excess of 10 miles per hour;

(2) No occupied passenger train shall be operated;

(3) No freight train shall be operated that contains more than five cars required to be placarded by the Hazardous Materials Regulations (49 CFR Part 172); and

(4) The gage on excepted track must not be more than 4′ 10¼ inches. (This paragraph (e)(4) is effective [1 year after effective date of final rule].)

(f) A track owner must advise the appropriate FRA Regional Office at least 10 days prior to removal of a segment of track from excepted status.

§ 213.5 Responsibility of track owners.

(a) Except as provided in paragraph (b) of this section, any owner of track to which this part applies who knows or has notice that the track does not comply with the requirements of this part, shall—

(1) Bring the track into compliance;

(2) Halt operations over that track; or

(3) Operate under authority of a person designated under § 213.7(a), who has at least one year of supervisory experience in railroad track maintenance, subject to conditions set forth in this part.

(b) If an owner of track to which this part applies designates a segment of track as ''excepted track'' under the provisions of § 213.4, operations may continue over that track without complying with the provisions of subparts B, C, D, and E, unless otherwise expressly stated.

(c) If an owner of track to which this part applies assigns responsibility for the track to another person (by lease or otherwise), written notification of the assignment must be provided to the appropriate FRA Regional Office at least 30 days in advance of the assignment. The notification may be made by any party to that assignment, but must be in writing and include the following—

(1) The name and address of the track owner;

(2) The name and address of the person to whom responsibility is assigned (assignee);

(3) A statement of the exact relationship between the track owner and the assignee;

(4) A precise identification of the track;

(5) A statement as to the competence and ability of the assignee to carry out the duties of the track owner under this part; and

(6) A statement signed by the assignee acknowledging the assignment to him of responsibility for purposes of compliance with this part.

(d) The Administrator may hold the track owner or the assignee or both responsible for compliance with this part and subject to penalties under § 213.15.

(e) A common carrier by railroad which is directed by the Surface Transportation Board to provide service over the track of another railroad under 49 U.S.C. 11125 is considered the owner of that track for the purposes of the application of this part during the period the directed service order remains in effect.

§ 213.7 Designation of qualified persons to supervise certain renewals and inspect track.

(a) Each track owner to which this part applies shall designate qualified persons to supervise restorations and renewals of track under traffic conditions. Each person designated must have—

(1) At least—

(i) 1 year of supervisory experience in railroad track maintenance; or

(ii) A combination of supervisory experience in track maintenance and training from a course in track maintenance or from a college level educational program related to track maintenance;

(2) Demonstrated to the owner that he—

(i) Knows and understands the requirements of this part;

(ii) Can detect deviations from those requirements; and

(iii) Can prescribe appropriate remedial action to correct or safely compensate for those deviations; and

(3) Written authorization from the track owner to prescribe remedial actions to correct or safely compensate for deviations from the requirements in this part.

(b) Each track owner to which this part applies shall designate qualified persons to inspect track for defects. Each person designated must have —

(1) At least—

(i) 1 year of experience in railroad track inspection; or

(ii) A combination of experience in track inspection and training from a course in track inspection or from a college level educational program related to track inspection;

(2) Demonstrated to the owner that he—

(i) Knows and understands the requirements of this part;

(ii) Can detect deviations from those requirements; and

(iii) Can prescribe appropriate remedial action to correct or safely compensate for those deviations; and

(3) Written authorization from the track owner to prescribe remedial actions to correct or safely compensate for deviations from the requirements of this part, pending review by a qualified person designated under paragraph (a) of this section.

(c) With respect to designations under paragraphs (a) and (b) of this section, each track owner must maintain written records of—

(1) Each designation in effect;

(2) The basis for each designation; and

(3) Track inspections made by each designated qualified person as required by § 213.241. These records must be kept available for inspection or copying by the Federal Railroad Administration during regular business hours.

(d) Persons not fully qualified to supervise certain renewals and inspect track as outlined in paragraphs (a) and (b) of this section, but with at least one year of maintenance-of-way or signal experience, may be qualified by the track owner to pass trains over broken rails and pull aparts provided that—

(1) The person is trained, examined, and re-examined periodically not to exceed two years, on the following topics as they relate to the safe passage of trains over broken rails or pull aparts—

(i) Rail defect identification, tie condition, track surface and alignment, gage restraint, rail end mismatch, joint bars, and maximum distance between rail ends over which trains may be allowed to pass;

(ii) The purpose of the examination will be to ascertain the persons ability to effectively apply these requirements and will not be used as a disqualifier; and

(iii) A minimum of four hours will be deemed adequate for initial training.

(2) The person deems it safe and train speeds are limited to a maximum of 10 mph over the broken rail or pull apart;

(3) The person must watch all movements over the broken rail or pull apart and be prepared to stop the train if necessary; and

(4) Person(s) fully qualified under § 213.7 of this part are notified and dispatched to the location promptly for the purpose of authorizing movements and effecting temporary or permanent repairs.

§ 213.9 Classes of track: operating speed limits.

(a) Except as provided in paragraphs (b) and (c) of this section and §§ 213.57(b), 213.59(a), 213.113(a), and 213.137 (b) and (c), the following maximum allowable operating speeds apply—

MAXIMUM ALLOWABLE OPERATING SPEEDS

[In miles per hour]

Over track that meets all of the requirements prescribed in this part for	For freight trains	For passenger trains
Class 1 track	10	15
Class 2 track	25	30
Class 3 track	40	60
Class 4 track	60	80
Class 5 track	80	90

(b) If a segment of track does not meet all of the requirements for its intended class, it is reclassified to the next lowest class of track for which it does meet all of the requirements of this part. However, if the segment of track does not at least meet the requirements for Class 1 track, operations may continue at Class 1 speeds for a period of not more than 30 days without bringing the track into compliance, under the authority of a person designated under § 213.7(a), who has at least one year of supervisory experience in railroad track maintenance, after that person determines that operations may safely continue and subject to any limiting conditions specified by such person.

§ 213.11 Restoration or renewal of track under traffic conditions.

If during a period of restoration or renewal, track is under traffic conditions and does not meet all of the requirements prescribed in this part, the work on the track must be under the continuous supervision of a person designated under § 213.7(a) who has at least one year of supervisory experience in railroad track maintenance, and subject to any limiting conditions specified by such person. The term ''continuous supervision'' as used in this section means the physical presence of that person at a job site. However, since the work may be performed over a large area, it is not necessary that each phase of the work be done under the visual supervision of that person.

§ 213.13 Measuring track not under load.

When unloaded track is measured to determine compliance with requirements of this part, the amount of rail movement, if any, that occurs while the track is loaded must be added to the measurements of the unloaded track.

§ 213.15 Civil penalty.

Any person including a railroad, any manager, supervisor, official, or other employee or agent of a railroad, any owner of track on which a railroad operates, or any person held by the Federal Railroad Administrator to be responsible under § 213.5(d) who violates any requirement of this part or causes the violation of any such requirement is subject to a civil penalty of at least $250 and not more than $10,000 per violation, except that: Penalties may be assessed against

individuals only for willful violations, and, where a grossly negligent violation or a pattern of repeated violations has created an imminent hazard of death or injury to persons, or has caused death or injury, a penalty not to exceed $20,000 per violation may be assessed. Each day a violation continues shall constitute a separate offense. See appendix B to this part for a statement of agency civil penalty policy.

§ 213.17 Exemptions.

(a) Any owner of track to which this part applies may petition the Federal Railroad Administrator for exemption from any or all requirements prescribed in this part.

(b) Each petition for exemption under this section must be filed in the manner and contain the information required by §§ 211.7 and 211.9 of this chapter.

(c) If the Administrator finds that an exemption is in the public interest and is consistent with railroad safety, the Administrator may grant the exemption subject to any conditions the Administrator deems necessary. Notice of each exemption granted is published in the **Federal Register** together with a statement of the reasons therefore.

Subpart B—Roadbed

§ 213.31 Scope.

This subpart prescribes minimum requirements for roadbed and areas immediately adjacent to roadbed.

§ 213.33 Drainage.

Each drainage or other water carrying facility under or immediately adjacent to the roadbed must be maintained and kept free of obstruction, to accommodate expected water flow for the area concerned.

§ 213.37 Vegetation.

Vegetation on railroad property which is on or immediately adjacent to roadbed must be controlled so that it does not—

(a) Become a fire hazard to track-carrying structures;

(b) Obstruct visibility of railroad signs and signals:

(1) Along the right-of-way, and

(2) At highway-rail crossings;

(Paragraphs (b) (1) and (2) are effective Date [1 year after effective date of rule].)

(c) Interfere with railroad employees performing normal trackside duties;

(d) Prevent proper functioning of signal and communication lines; or

(e) Prevent railroad employees from visually inspecting moving equipment from their normal duty stations.

Subpart C—Track Geometry

§ 213.51 Scope.

This subpart prescribes requirements for the gage, alignment, and surface of track, and the elevation of outer rails and speed limitations for curved track.

§ 213.53 Gage.

(a) Gage is measured between the heads of the rails at right-angles to the rails in a plane five-eighths of an inch below the top of the rail head.

(b) Gage must be within the limits prescribed in the following table—

Class of track	The gage must be at least	But not more than
Class 1 track	4' 8''	4' 10''
Class 2 and 3 track	4' 8''	4' 9¾''
Class 4 and 5 track	14' 8''	4' 9½''

§ 213.55 Alignment.

Alignment may not deviate from uniformity more than the amount prescribed in the following table:

Class of track	Tangent track	Curved track	
	The deviation of the mid-offset from a 62-foot line [1] may not be more than (inches)	The deviation of the mid-ordinate from a 31-foot chord [2] may not be more than (inches)	The deviation of the mid-ordinate from a 62-foot chord [2] may not be more than (inches)
Class 1 track	5	([3])	5
Class 2 track	3	([3])	3
Class 3 track	1¾	1¼	1¾
Class 4 track	1½	1	1½
Class 5 track	¾	½	⅝

[1] The ends of the line must be at points on the gage side of the line rail, five-eighths of an inch below the top of the railhead. Either rail may be used as the line rail, however, the same rail must be used for the full length of that tangential segment of track.

[2] The ends of the chord must be at points on the gage side of the outer rail, five-eighths of an inch below the top of the railhead.

[3] N/A—Not Applicable.

§ 213.57 Curves; elevation and speed limitations.

(a) The maximum crosslevel on the outside rail of a curve may not be more than 8 inches on track Classes 1 and 2 and 7 inches on Classes 3 through 5. Except as provided in § 213.63, the outside rail of a curve may not be lower than the inside rail. (The first sentence of paragraph (a) is effective [Date 1 yr. after effective date of final rule].)

(b) The maximum allowable operating speed for each curve is determined by the following formula—

$$V_{max} = \sqrt{(E_a + 3)/0.0007D}$$

where—

V_{max}=Maximum allowable operating speed (miles per hour).

E_a=Actual elevation of the outside rail (inches).[1]

D=Degree of curvature (degrees).[2]

Table 1 of Appendix A is a table of maximum allowable operating speed computed in accordance with this

formula for various elevations and degrees of curvature.

(c) For rolling stock meeting the requirements specified in paragraph (d) of this section, the maximum operating speed for each curve may be determined by the following formula—

$$V_{max} = \sqrt{(E_a + 4)/0.0007D}$$

where—

V_{max}=Maximum allowable operating speed (miles per hour).

E_a=Actual elevation of the outside rail (inches).[1]

D=Degree of curvature (degrees).[2]

Table 2 of Appendix A is a table of maximum allowable operating speed computed in accordance with this formula for various elevations and degrees of curvature.

(d) Qualified equipment may be operated at curving speeds determined by the formula in paragraph (c) of this section, provided each specific class of equipment is approved for operation by the Federal Railroad Administration and demonstrate that—

(1) When positioned on a track with a uniform 4 inch superelevation, the roll angle between the floor of the equipment and the horizontal does not exceed 5.7 degrees; and

(2) When positioned on a track with a uniform 6 inch superelevation, no wheel of the equipment unloads to a value of 60 percent of its static value on perfectly level track, and the roll angle between the floor of the equipment and the horizontal does not exceed 8.6 degrees.

(3) The track owner must notify the Federal Railroad Administrator no less than 30 calendar days prior to the proposed implementation of the higher curving speeds allowed under the formula in paragraph (c) of this section. The notification must be in writing and shall contain, at a minimum, the following information—

(i) A complete description of the class of equipment involved, including schematic diagrams of the suspension systems and the location of the center of gravity above top of rail;

(ii) A complete description of the test procedure[3] and instrumentation used to qualify the equipment and the maximum values for wheel unloading and roll angles which were observed during testing;

(iii) Procedures or standards in effect which relate to the maintenance of the suspension system for the particular class of equipment; and

(iv) Identification of line segment on which the higher curving speeds are proposed to be implemented.

(e) In the case of a track owner, or an operator of a passenger or commuter service, who provides passenger or commuter service over trackage of more than one track owner with the same class of equipment, that person may provide written notification to the Federal Railroad Administrator with the written consent of the other affected track owners.

(f) Equipment presently operating at curving speeds allowed under the formula in paragraph (c) of this section, by reason of conditional waivers granted by the Federal Railroad Administration, shall be considered to have successfully complied with the requirements of paragraph (d) of this section.

§ 213.59 Elevation of curved track; runoff.

(a) If a curve is elevated, the full elevation must be provided throughout the curve, unless physical conditions do not permit. If elevation runoff occurs in a curve, the actual minimum elevation must be used in computing the maximum allowable operating speed for that curve under § 213.57(b).

(b) Elevation runoff must be at a uniform rate, within the limits of track surface deviation prescribed in § 213.63, and it must extend at least the full length of the spirals. If physical conditions do not permit a spiral long enough to accommodate the minimum length of runoff, part of the runoff may be on tangent track.

§ 213.63 Track surface.

Each owner of the track to which this part applies shall maintain the surface of its track within the limits prescribed in the following table:

Track surface	Class of track				
	1 (inches)	2 (inches)	3 (inches)	4 (inches)	5 (inches)
The runoff in any 31 feet of rail at the end of a raise may not be more than	3½	3	2	1½	1
The deviation from uniform profile on either rail at the mid-ordinate of a 62-foot chord may not be more than	3	2¾	2¼	2	1¼
The deviation from zero crosslevel at any point on tangent or reverse crosslevel elevation on curves may not be more than	3	2	1¾	1¼	1
The difference in crosslevel between any two points less than 62 feet apart may not be more than*[1 2]	3	2½	2	1¾	1½
*Where determined by engineering decision prior to the promulgation of this rule, due to physical restrictions on spiral length and operating practices and experience, the variation in crosslevel on spirals per 31 feet may not be more than	2	1¾	1¼	1	¾

[1] Except as limited by § 213.57(a), where the elevation at any point in a curve equals or exceeds 6 inches, the difference in crosslevel within 62 feet between that point and a point with greater elevation may not be more than 1½ inches. (Footnote 1 is effective [date 1 year after effective date of this final rule].)

[2] However, to control harmonics on Class 2 through 5 jointed track with staggered joints, the crosslevel differences shall not exceed 1¼ inches in all of six consecutive pairs of joints, as created by 7 low joints. Track with joints staggered less than 10 feet shall not be considered as having staggered joints. Joints within the 7 low joints outside of the regular joint spacing shall not be considered as joints for purposes of this footnote. (Footnote 2 is effective [date 1 year after effective date of this rule].)

[1] Actual elevation for each 155 foot track segment in the body of the curve is determined by averaging the elevation for 10 points through the segment at 15.5 foot spacing. If the curve length is less than 155 feet, average the points through the full length of the body of the curve.

[2] Degree of curvature is determined by averaging the degree of curvature over the same track segment as the elevation.

[3] The test procedure may be conducted in a test facility whereby all the wheels on one side (right or left) of the equipment are alternately raised and lowered by 4 and 6 inches and the vertical wheel loads under each wheel are measured and a level is used to record the angle through which the floor of the equipment has been rotated.

Subpart D—Track Structure

§ 213.101 Scope.

This subpart prescribes minimum requirements for ballast, crossties, track assembly fittings, and the physical conditions of rails.

§ 213.103 Ballast; general.

Unless it is otherwise structurally supported, all track must be supported by material which will—

(a) Transmit and distribute the load of the track and railroad rolling equipment to the subgrade;

(b) Restrain the track laterally, longitudinally, and vertically under dynamic loads imposed by railroad rolling equipment and thermal stress exerted by the rails;

(c) Provide adequate drainage for the track; and

(d) Maintain proper track crosslevel, surface, and alignment.

§ 213.109 Crossties.

(a) Crossties shall be made of a material to which rail can be securely fastened.

(b) Each 39 foot segment of track shall have—

(1) A sufficient number of crossties which in combination provide effective support that will—

(i) Hold gage within the limits prescribed in § 213.53(b);

(ii) Maintain surface within the limits prescribed in § 213.63; and

(iii) Maintain alignment within the limits prescribed in § 213.55.

(2) The minimum number and type of crossties specified in paragraph (c) of this section effectively distributed to support the entire segment; and

(3) At least one crosstie of the type specified in paragraph (c) of this section that is located at a joint location as specified in paragraph (d) of this section.

(c) Each 39 foot segment of track shall have the minimum number and type of crossties as indicated in the following table:

Class of track	Tangent track and curves≤2 degrees	Turnouts and curved track over 2 degrees
Class 1 track	5	6
Class 2 track	8	9
Class 3 track	8	10
Class 4 and 5 track	12	14

Crossties required shall be of the type which are not —

(1) Broken through;

(2) Split or otherwise impaired to the extent the crossties will allow the ballast to work through, or will not hold spikes or rail fasteners;

(3) So deteriorated that the tie plate or base of rail can move laterally ½ inch relative to the crossties; or

(4) Cut by the tie plate through more than 40 percent of a ties' thickness.

(d) Class 1 and Class 2 track shall have one crosstie whose centerline is within 24 inches of the rail joint location, and Classes 3 through 5 track shall have one crosstie whose centerline is within 18 inches of the rail joint location or, two crossties whose centerlines are within 24 inches either side of the rail joint location. The relative position of these ties is described in the following diagrams.

BILLING CODE 4910–06–P

Classes 1 and 2

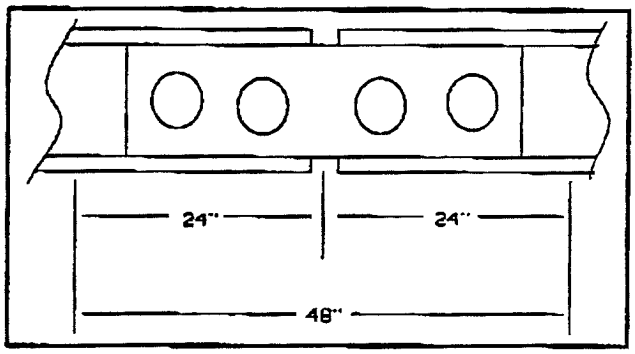

Each rail joint in Classes 1 and 2 track shall be supported by at least one crosstie specified in paragraph (c) of this section whose centerline is within 48" shown above.

Classes 3 through 5

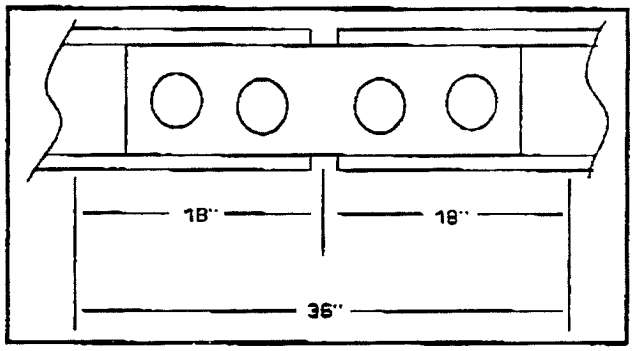

Each rail joint in Classes 3 through 5 track shall be supported by either at least one crosstie specified in paragraph (c) of this section whose centerline is within 36" shown above, or;

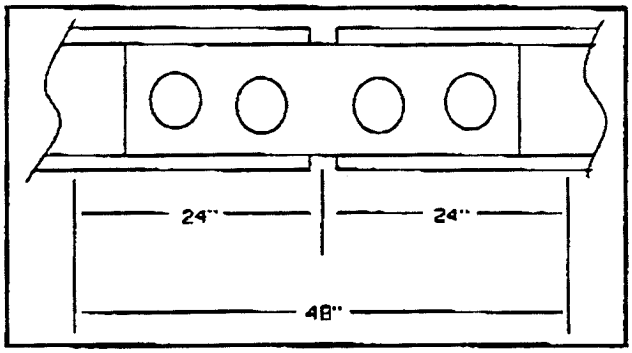

Two crossties, one on each side of the rail joint, whose centerlines are within 24" of the rail joint location shown above.

BILLING CODE 4910–06–C

(e) For track constructed without crossties, such as slab track, track connected directly to bridge structural components and track over servicing pits, the track structure must meet the requirements of paragraphs (b)(1)(i), (ii), and (iii).

§ 213.113 Defective rails.

(a) When an owner of track to which this part applies learns, through inspection or otherwise, that a rail in that track contains any of the defects listed in the following table, a person designated under § 213.7 shall determine whether or not the track may continue in use. If he determines that the track may continue in use, operation over the defective rail is not permitted until—

(1) The rail is replaced; or

(2) The remedial action prescribed in the table is initiated —

REMEDIAL ACTION

Defect	Length of defect (inch)		Percent of rail head cross-sectional area weakened by defect		If defective rail is not replaced, take the remedial action prescribed in note
	More than	But not more than	Less than	But not less than	
Transverse fissure			70	5	B.
			100	70	A2.
				100	A.
Compound fissure			70	5	B.
			100	70	A2.
				100	A.
Detail fracture			25	5	C.
Engine burn fracture			80	25	D.
Defective weld 25			100	80	A2 or E and H.
				100	A or E and H.
Horizontal split head	1	2			H and F.
Vertical split head	2	4			I and G.
Split web	4				B.
Piped rail	(1)	(1)	(1)		A.
Head web separation					
Bolt hole crack	½	1			H and F.
	1	1½			H and G.
	1½				B.
	(1)	(1)	(1)		A.
Broken base	1	6			D.
	6				A or E and I.
Ordinary break					A or E.
Damaged rail					D.
Flattened rail	Depth ≥⅜ and Length ≥8				H.

(1) Break out in rail head.

Notes—

A. Assign person designated under § 213.7 to visually supervise each operation over defective rail.

A2. Assign person designated under § 213.7 to make visual inspection. After a visual inspection, that person may authorize operation to continue without continuous visual supervision at a maximum of 10 mph for up to 24 hours prior to another such visual inspection or replacement or repair of the rail.

B. Limit operating speed over defective rail to that as authorized by a person designated under § 213.7(a), who has at least one year of supervisory experience in railroad track maintenance. The operating speed cannot be over 30 mph or the maximum allowable speed under § 213.9 for the class of track concerned, whichever is lower.

C. Apply joint bars bolted only through the outermost holes to defect within 20 days after it is determined to continue the track in use. In the case of Classes 3 through 5 track, limit operating speed over defective rail to 30 mph until angle bars are applied; thereafter, limit speed to 50 mph or the maximum allowable speed under § 213.9 for the class of track concerned, whichever is lower. When a search for internal rail defects is conducted under § 213.237, and defects are discovered in Classes 3 through 5 which require remedial action C, the operating speed shall be limited to 50 mph, or the maximum allowable speed under § 213.9 for the class of track concerned, whichever is lower, for a period not to exceed 4 days. If the defective rail has not been removed from the track or a permanent repair made within 4 days of the discovery, limit operating speed over the defective rail to 30 mph until joint bars are applied; thereafter, limit speed to 50 mph or the maximum allowable speed under § 213.9 for the class of track concerned, whichever is lower.

D. Apply joint bars bolted only through the outermost holes to defect within 10 days after it is determined to continue the track in use. In the case of Classes 3 through 5 track, limit operating speed over the defective rail to 30 mph or less as authorized by a person designated under § 213.7(a), who has at least one year of supervisory experience in railroad track maintenance, until angle bars are applied; thereafter, limit speed to 50 mph or the maximum allowable speed under § 213.9 for the class of track concerned, whichever is lower.

E. Apply joint bars to defect and bolt in accordance with § 213.121 (d) and (e).

F. Inspect rail 90 days after it is determined to continue the track in use.

G. Inspect rail 30 days after it is determined to continue the track in use.

H. Limit operating speed over defective rail to 50 mph or the maximum allowable speed under § 213.9 for the class of track concerned, whichever is lower.

I. Limit operating speed over defective rail to 30 mph or the maximum allowable speed under § 213.9 for the class of track concerned, whichever is lower.

(b) As used in this section—

(1) *Transverse Fissure* means a progressive crosswise fracture starting from a crystalline center or nucleus inside the head from which it spreads outward as a smooth, bright, or dark, round or oval surface substantially at a right angle to the length of the rail. The distinguishing features of a transverse fissure from other types of fractures or defects are the crystalline center or

nucleus and the nearly smooth surface of the development which surrounds it.

(2) *Compound Fissure* means a progressive fracture originating in a horizontal split head which turns up or down in the head of the rail as a smooth, bright, or dark surface progressing until substantially at a right angle to the length of the rail. Compound fissures require examination of both faces of the fracture to locate the horizontal split head from which they originate.

(3) *Horizontal Split Head* means a horizontal progressive defect originating inside of the rail head, usually one-quarter inch or more below the running surface and progressing horizontally in all directions, and generally accompanied by a flat spot on the running surface. The defect appears as a crack lengthwise of the rail when it reaches the side of the rail head.

(4) *Vertical Split Head* means a vertical split through or near the middle of the head, and extending into or through it. A crack or rust streak may show under the head close to the web or pieces may be split off the side of the head.

(5) *Split Web* means a lengthwise crack along the side of the web and extending into or through it.

(6) *Piped Rail* means a vertical split in a rail, usually in the web, due to failure of the shrinkage cavity in the ingot to unite in rolling.

(7) *Broken Base* means any break in the base of the rail.

(8) *Detail Fracture* means a progressive fracture originating at or near the surface of the rail head. These fractures should not be confused with transverse fissures, compound fissures, or other defects which have internal origins. Detail fractures may arise from shelly spots, head checks, or flaking.

(9) *Engine Burn Fracture* means a progressive fracture originating in spots where driving wheels have slipped on top of the rail head. In developing downward they frequently resemble the compound or even transverse fissures with which they should not be confused or classified.

(10) *Ordinary Break* means a partial or complete break in which there is no sign of a fissure, and in which none of the other defects described in this paragraph (b) are found.

(11) *Damaged Rail* means any rail broken or injured by wrecks, broken, flat, or unbalanced wheels, slipping, or similar causes.

(12) *Flattened Rail* means a short length of rail, not at a joint, which has flattened out across the width of the rail head to a depth of ‘‘ inch or more below the rest of the rail. Flattened rail occurrences have no repetitive regularity and thus do not include corrugations, and have no apparent localized cause such as a weld or engine burn. Their individual length is relatively short, as compared to a condition such as head flow on the low rail of curves.

§ 213.115 Rail end mismatch.

Any mismatch of rails at joints may not be more than that prescribed by the following table—

Class of track	Any mismatch of rails at joints may not be more than the following—	
	On the tread of the rail ends (inch)	On the gage side of the rail ends (inch)
Class 1 track	¼	¼
Class 2 track	¼	3/16
Class 3 track	3/16	3/16
Class 4 and 5 track	⅛	⅛

§ 213.119 Continuous welded rail (CWR); general.

Each track owner with track constructed of CWR shall have in effect written procedures which address the installation, adjustment, maintenance and inspection of CWR, and a training program for the application of those procedures, which shall be submitted to the Federal Railroad Administration within six months following the effective date of the final rule. FRA shall review each plan for compliance with the following—

(a) Procedures for the installation and adjustment of CWR which include—

(1) Designation of a desired rail installation temperature range for the geographic area in which the CWR is located; and

(2) Destressing procedures/methods which address proper attainment of the desired rail installation temperature range when adjusting CWR.

(b) Rail anchoring or fastening requirements that will provide sufficient restraint to limit longitudinal rail and crosstie movement to the extent practical, and specifically addressing CWR rail anchoring or fastening patterns on bridges, bridge approaches, and at other locations where possible longitudinal rail and crosstie movement associated with normally expected train-induced forces, is restricted.

(c) Procedures which specifically address maintaining a desired rail installation temperature range when cutting CWR including rail repairs, in-track welding, and in conjunction with adjustments made in the area of tight track, a track buckle, or a pull-apart. Rail repair practices must take into consideration existing rail temperature so that—

(1) When rail is removed, the length installed shall be determined by taking into consideration the existing rail temperature and the desired rail installation temperature range; and

(2) Under no circumstances should rail be added when the rail temperature is below that designated by paragraph (a)(1) of this section, without provisions for later adjustment.

(d) Procedures which address the monitoring of CWR in curved track for inward shifts of alignment toward the center of the curve as a result of disturbed track.

(e) Procedures which control train speed on CWR track when—

(1) Maintenance work, track rehabilitation, track construction, or any other event occurs which disturbs the roadbed or ballast section and reduces the lateral and/or longitudinal resistance of the track; and

(2) In formulating the procedures under this paragraph (e), the track owner must—

(i) Determine the speed required, and the duration and subsequent removal of any speed restriction based on the restoration of the ballast, along with sufficient ballast re-consolidation to stabilize the track to a level that can accommodate expected train-induced forces. Ballast re-consolidation can be achieved through either the passage of train tonnage or mechanical stabilization procedures, or both; and

(ii) Take into consideration the type of crossties used.

(f) Procedures which prescribe when physical track inspections are to be performed to detect buckling prone

conditions in CWR track. At a minimum, these procedures shall address inspecting track to identify—

(1) Locations where tight or kinky rail conditions are likely to occur;

(2) Locations where track work of the nature described in paragraph (e)(1) of this section have recently been performed; and

(3) In formulating the procedures under this paragraph (f), the track owner shall—

(i) Specify the timing of the inspection; and

(ii) Specify the appropriate remedial actions to be taken when buckling prone conditions are found.

(g) The track owner shall have in effect a comprehensive training program for the application of these written CWR procedures, with provisions for periodic re-training, for those individuals designated under § 213.7 of this part as qualified to supervise the installation, adjustment, and maintenance of CWR track and to perform inspections of CWR track.

(h) The track owner shall prescribe recordkeeping requirements necessary to provide an adequate history of track constructed with CWR. At a minimum, these records must include:

(1) Rail temperature, location and date of CWR installations. This record shall be retained for at least one year; and

(2) A record of any CWR installation or maintenance work that does not conform with the written procedures. Such record must include the location of the rail and be maintained until the CWR is brought into conformance with such procedures.

(i) As used in this section—

(1) *Adjusting/Destressing* means the procedure by which a rail's temperature is re-adjusted to the desired value. It typically consists of cutting the rail and removing rail anchoring devices, which provides for the necessary expansion and contraction, and then re-assembling the track.

(2) *Buckling Incident* means the formation of a lateral mis-alignment sufficient in magnitude to constitute a deviation from the Class 1 requirements specified in § 213.55 of this part. These normally occur when rail temperatures are relatively high and are caused by high longitudinal compressive forces.

(3) *Continuous Welded Rail (CWR)* means rail that has been welded together into lengths exceeding 400 feet.

(4) *Desired Rail Installation Temperature Range* means the rail temperature range, within a specific geographical area, at which forces in CWR should not cause a track buckle in extreme heat, or a pull-apart during extreme cold weather.

(5) *Disturbed Track* means the disturbance of the roadbed or ballast section, as a result of track maintenance or any other event, which reduces the lateral and/or longitudinal resistance of the track.

(6) *Mechanical Stabilization* means a type of procedure used to restore track resistance to disturbed track following certain maintenance operations. This procedure may incorporate dynamic track stabilizers or ballast consolidators, which are units of work equipment that are used as a substitute for the stabilization action provided by the passage of tonnage trains.

(7) *Rail Anchors* means those devices which are attached to the rail and bear against the side of the crosstie to control longitudinal rail movement. Certain types of rail fasteners also act as rail anchors and control longitudinal rail movement by exerting a downward clamping force on the upper surface of the rail base.

(8) *Rail Temperature* means the temperature of the rail, measured with a rail thermometer.

(9) *Tight/Kinky Rail* means CWR which exhibits minute alignment irregularities which indicate that the rail is in a considerable amount of compression.

(10) *Train-induced Forces* means the vertical, longitudinal, and lateral dynamic forces which are generated during train movement and which can contribute to the buckling potential.

(11) *Track Lateral Resistance* means the resistance provided to the rail/crosstie structure against lateral displacement.

(12) *Track Longitudinal Resistance* means the resistance provided by the rail anchors/rail fasteners and the ballast section to the rail/crosstie structure against longitudinal displacement.

§ 213.121 Rail joints.

(a) Each rail joint, insulated joint, and compromise joint must be of a structurally sound design and dimensions for the rail on which it is applied.

(b) If a joint bar on Classes 3 through 5 track is cracked, broken, or because of wear allows excessive vertical movement of either rail when all bolts are tight, it must be replaced.

(c) If a joint bar is cracked or broken between the middle two bolt holes it must be replaced.

(d) In the case of conventional jointed track, each rail must be bolted with at least two bolts at each joint in Classes 2 through 5 track, and with at least one bolt in Class 1 track.

(e) In the case of continuous welded rail track, each rail must be bolted with at least two bolts at each joint.

(f) Each joint bar must be held in position by track bolts tightened to allow the joint bar to firmly support the abutting rail ends and to allow longitudinal movement of the rail in the joint to accommodate expansion and contraction due to temperature variations. When no-slip, joint-to-rail contact exists by design, the requirements of this paragraph do not apply. Those locations when over 400 feet in length, are considered to be continuous welded rail track and must meet all the requirements for continuous welded rail track prescribed in this part.

(g) No rail shall have a bolt hole which is torch cut or burned in Classes 2 through 5 track. (This paragraph (g) is effective [1 year after effective date of final rule].)

(h) No joint bar shall be reconfigured by torch cutting in Classes 3 through 5 track. (This paragraph (h) is effective [1 year after effective date of final rule].)

§ 213.122 Torch cut rail.

(a) Except as a temporary repair in emergency situations no rail having a torch cut end shall be used in Classes 3 through 5 track. When a rail end is torch cut in emergency situations, speed over that rail end must not exceed the maximum allowable for Class 2 track. For existing torch cut rail ends in Classes 3 through 5 track the following shall apply—

(1) Within one year of [the effective date of the final rule], all torch cut rail ends in Class 5 track must be removed;

(2) Within two years of [the effective date of the final rule], all torch cut rail ends in Class 4 track must be removed; and

(3) Within one year of [the effective date of the final rule], all torch cut rail ends in Class 3 track over which regularly scheduled passenger trains operate, must be inventoried by the track owner.

(b) Following the expiration of the time limits specified in (a)(1), (2), and (3) of this section, any torch cut rail end not removed from Classes 4 and 5 track, or any torch cut rail end not inventoried in Class 3 track over which regularly scheduled passenger trains operate, must be removed within 30 days of discovery. Speed over that rail end must not exceed the maximum allowable for Class 2 track until removed.

§ 213.123 Tie plates.

(a) In Classes 3 through 5 track where timber crossties are in use there must be

tie plates under the running rails on at least eight of any 10 consecutive ties.

(b) In Classes 3 through 5 track no metal object which causes a concentrated load by solely supporting a rail shall be allowed between the base of the rail and the bearing surface of the tie plate. (This paragraph (b) is effective 1 year after effective date of final rule].)

§ 213.127 Rail fastening systems.

Track shall be fastened by a system of components which effectively maintains gage within the limits prescribed in § 213.53(b).

§ 213.133 Turnouts and track crossings generally.

(a) In turnouts and track crossings, the fastenings must be intact and maintained so as to keep the components securely in place. Also, each switch, frog, and guard rail must be kept free of obstructions that may interfere with the passage of wheels.

(b) Classes 3 through 5 track must be equipped with rail anchoring through and on each side of track crossings and turnouts, to restrain rail movement affecting the position of switch points and frogs. (Requirement for Class 3 Track Effective [Date 1 Year after effective Date of Final Rule].)

(c) Each flangeway at turnouts and track crossings must be at least 1½ inches wide.

§ 213.135 Switches.

(a) Each stock rail must be securely seated in switch plates, but care must be used to avoid canting the rail by overtightening the rail braces.

(b) Each switch point must fit its stock rail properly, with the switch stand in either of its closed positions to allow wheels to pass the switch point. Lateral and vertical movement of a stock rail in the switch plates or of a switch plate on a tie must not adversely affect the fit of the switch point to the stock rail. Broken or cracked switch point rails will be subject to the requirements of § 213.113, except that where remedial actions C, D, or E require the use of joint bars, and joint bars cannot be placed due to the physical configuration of the switch, remedial action B will govern, taking into account any added safety provided by the presence of reinforcing bars on the switch points.

(c) Each switch must be maintained so that the outer edge of the wheel tread cannot contact the gage side of the stock rail.

(d) The heel of each switch rail must be secure and the bolts in each heel must be kept tight.

(e) Each switch stand and connecting rod must be securely fastened and operable without excessive lost motion.

(f) Each throw lever must be maintained so that it cannot be operated with the lock or keeper in place.

(g) Each switch position indicator must be clearly visible at all times.

(h) Unusually chipped or worn switch points must be repaired or replaced. Metal flow must be removed to insure proper closure.

(i) Tongue & Plain Mate switches, which by design exceed Class 1 and excepted track maximum gage limits, are permitted in Class 1 and excepted track.

§ 213.137 Frogs.

(a) The flangeway depth measured from a plane across the wheel-bearing area of a frog on Class 1 track may not be less than 1⅜ inches, or less than 1½ inches on Classes 2 through 5 track.

(b) If a frog point is chipped, broken, or worn more than five-eighths inch down and 6 inches back, operating speed over the frog may not be more than 10 miles per hour.

(c) If the tread portion of a frog casting is worn down more than three-eighths inch below the original contour, operating speed over that frog may not be more than 10 miles per hour.

(d) Where frogs are designed as flange-bearing, flangeway depth may be less than that shown for Class 1 if operated at Class 1 speeds.

§ 213.139 Spring rail frogs.

(a) The outer edge of a wheel tread may not contact the gage side of a spring wing rail.

(b) The toe of each wing rail must be solidly tamped and fully and tightly bolted.

(c) Each frog with a bolt hole defect or head-web separation must be replaced.

(d) Each spring must have a tension sufficient to hold the wing rail against the point rail.

(e) The clearance between the holddown housing and the horn may not be more than one-fourth of an inch.

§ 213.141 Self-guarded frogs.

(a) The raised guard on a self-guarded frog may not be worn more than three-eighths of an inch.

(b) If repairs are made to a self-guarded frog without removing it from service, the guarding face must be restored before rebuilding the point.

§ 213.143 Frog guard rails and guard faces; gage.

The guard check and guard face gages in frogs must be within the limits prescribed in the following table—

Class of track	Guard check gage—The distance between the gage line of a frog to the guard line [1] of its guard rail or guarding face, measured across the track at right angles to the gage line [2], may not be less than—	Guard face gage—The distance between guard lines [1], measured across the track at right angles to the gage line [2], may not be more than—
Class 1 track	4′6⅛″	4′5¼″
Class 2 track	4′6¼″	4′5⅛″
Class 3 and 4 track	4′6⅜″	4′5⅛″
Class 5 track	4′6½″	4′5″

[1] A line along that side of the flangeway which is nearer to the center of the track and at the same elevation as the gage line.

[2] A line ⅝inch below the top of the center line of the head of the running rail, or corresponding location of the tread portion of the track structure.

Subpart E—Track Appliances and Track-Related Devices

§ 213.201 Scope.

This subpart prescribes minimum requirements for certain track appliances and track-related devices.

§ 213.205 Derails.

(a) Each derail must be clearly visible.

(b) When in a locked position, a derail must be free of lost motion which would prevent it from performing its intended function.

(c) Each derail must be maintained to function as intended.

(d) Each derail must be properly installed for the rail to which it is applied. (This paragraph (d) is effective [Date 1 year after effective date of rule].)

Subpart F—Inspection

§ 213.231 Scope.

This subpart prescribes requirements for the frequency and manner of inspecting track to detect deviations from the standards prescribed in this part.

§ 213.233 Track inspections.

(a) All track must be inspected in accordance with the schedule prescribed in paragraph (c) of this section by a person designated under § 213.7.

(b) Each inspection must be made on foot or by riding over the track in a vehicle at a speed that allows the person making the inspection to visually inspect the track structure for compliance with this part. However, mechanical, electrical, and other track inspection devices may be used to supplement visual inspection. If a vehicle is used for visual inspection, the speed of the vehicle may not be more than 5 miles per hour when passing over track crossings and turnouts, otherwise, the inspection vehicle speed shall be at the sole discretion of the inspector, based on track conditions and inspection requirements. When riding over the track in a vehicle, the inspection will be subject to the following conditions—

(1) One inspector in a vehicle may inspect up to two tracks at one time provided that the inspector's visibility remains unobstructed by any cause and that the second track is not centered more than 30 feet from the track upon which the inspector is riding;

(2) Two inspectors in one vehicle may inspect up to four tracks at a time provided that the inspectors' visibility remains unobstructed by any cause and that each track being inspected is centered within 39 feet from the track upon which the inspectors are riding;

(3) Each main track is actually traversed by the vehicle or inspected on foot at least once every two weeks, and each siding is actually traversed by the vehicle or inspected on foot at least once every month. On high density commuter railroad lines where track time does not permit an on track vehicle inspection, and where track centers are 15 foot or less, the requirements of this paragraph (b)(3) will not apply; and

(4) Track inspection records must indicate which track(s) are traversed by the vehicle or inspected on foot as outlined in paragraph (b)(3) of this section.

(c) Each track inspection must be made in accordance with the following schedule —

Class of track	Type of track	Required frequency
Class 1, 2 , and 3 track	Main track and sidings	*Weekly* with at least 3 calendar days interval between inspections, or *before use,* if the track is used less than once a week, or twice *weekly* with at least 1 calendar day interval between inspections, if the track carries passenger trains or more than 10 million gross tons of traffic during the preceding calendar year.
Class 1, 2, and 3 track	Other than main track and sidings.	*Monthly* with at least 20 calendar days interval between inspections.
Class 4 and 5 track		*Twice weekly* with at least 1 calendar day interval between inspections

(d) If the person making the inspection finds a deviation from the requirements of this part, the inspector shall immediately initiate remedial action.

Note: to § 213.233 No part of this section will in any way be construed to limit the inspector's discretion as it involves inspection speed and sight distance.

§ 213.235 Switch and track crossing inspections.

(a) Except as provided in paragraph (b) of this section, each switch, turnout, and track crossing must be inspected on foot at least monthly. Each switch in Classes 3 through 5 track that is held in position only by the operating mechanism and one connecting rod shall be operated to all of its positions during one inspection in every 3 month period.

(b) In the case of track that is used less than once a month, each switch, turnout, and track crossing must be inspected on foot before it is used.

§ 213.237 Inspection of rail.

(a) In addition to the track inspections required by § 213.233, a continuous search for internal defects must be made of all rail in Classes 4 through 5 track, and Class 3 track over which passenger trains operate, at least once every 40 mgt or once a year, whichever interval is shorter. On Class 3 track over which passenger trains do not operate such a search must be made at least once every 30 mgt or once a year, whichever interval is longer. (This paragraph (a) is effective the first January 1 after [effective date of final rule].)

(b) Inspection equipment must be capable of detecting defects between joint bars, in the area enclosed by joint bars.

(c) Each defective rail must be marked with a highly visible marking on both sides of the web and base.

(d) If the person assigned to operate the rail defect detection equipment being used determines that, due to rail surface conditions, a valid search for internal defects could not be made over a particular length of track, the test on that particular length of track cannot be considered as a search for internal defects under § 213.237(a). (This paragraph (d) is not retroactive to tests performed prior to the effective date of final rule].)

(e) If a valid search for internal defects cannot be conducted for reasons described in paragraph (d) of this section, the track owner shall, before the expiration of time or tonnage limits—

(1) Conduct a valid search for internal defects;

(2) Reduce operating speed to a maximum of 25 miles per hour until

such time as a valid search for internal defects can be made; or

(3) Remove the rail from service.

§ 213.239 Special inspections.

In the event of fire, flood, severe storm, or other occurrence which might have damaged track structure, a special inspection must be made of the track involved as soon as possible after the occurrence.

§ 213.241 Inspection records.

(a) Each owner of track to which this part applies shall keep a record of each inspection required to be performed on that track under this subpart.

(b) Each record of an inspection under §§ 213.4, 213.233, and 213.235 shall be prepared on the day the inspection is made and signed by the person making the inspection. Records must specify the track inspected, date of inspection, location and nature of any deviation from the requirements of this part, and the remedial action taken by the person making the inspection. The owner shall designate the location(s) where each original record shall be maintained for at least one year after the inspection covered by the record. The owner shall also designate one location, within 100 miles of each state in which they conduct operations, where copies of records which apply to those operations are either maintained or can be viewed following 10 days notice by the Federal Railroad Administration.

(c) Rail inspection records must specify the date of inspection, the location and nature of any internal defects found, the remedial action taken and the date thereof, and the location of any intervals of track not tested per § 213.237(d). The owner shall retain a rail inspection record for at least two years after the inspection and for one year after remedial action is taken.

(d) Each owner required to keep inspection records under this section shall make those records available for inspection and copying by the Federal Railroad Administration.

(e) For purposes of compliance with the requirements of this section, an owner of track may maintain and transfer records through electronic transmission, storage, and retrieval provided that—

(1) The electronic system be designed so that the integrity of each record is maintained through appropriate levels of security such as recognition of an electronic signature, or other means, which uniquely identify the initiating person as the author of that record. No two persons shall have the same electronic identity;

(2) The electronic storage of each record must be initiated by the person making the inspection within 24 hours following the completion of that inspection;

(3) The electronic system must ensure that each record cannot be modified in any way, or replaced, once the record is transmitted and stored;

(4) Any amendment to a record must be electronically stored apart from the record which it amends. Each amendment to a record must be uniquely identified as to the person making the amendment;

(5) The electronic system must provide for the maintenance of inspection records as originally submitted without corruption or loss of data;

(6) Paper copies of electronic records and amendments to those records, that may be necessary to document compliance with this part must be made available for inspection and copying by the Federal Railroad Administration at the locations specified in paragraph (b) of this section; and

(7) Track inspection records shall be kept available to persons who performed the inspections and to persons performing subsequent inspections.

Subpart G—Train Operations at Track Classes 6 and Higher

§ 213.301 Scope of subpart.

This part applies to all track that is required to support the passage of qualified flanged wheel, high speed passenger equipment operating between 91 miles per hour and 200 miles per hour and high speed freight equipment operating between 81 miles per hour to 200 miles per hour.

§ 213.303 Responsibility for compliance.

(a) Any owner of track to which this subpart applies who knows or has notice that the track does not comply with the requirements of this subpart, shall—

(1) Bring the track into compliance; or

(2) Halt operations over that track.

(b) If an owner of track to which this subpart applies assigns responsibility for the track to another person (by lease or otherwise), notification of the assignment must be provided to the appropriate FRA Regional Office at least 30 days in advance of the assignment. The notification may be made by any party to that assignment, but must be in writing and include the following —

(1) The name and address of the track owner;

(2) The name and address of the person to whom responsibility is assigned (assignee);

(3) A statement of the exact relationship between the track owner and the assignee;

(4) A precise identification of the track;

(5) A statement as to the competence and ability of the assignee to carry out the duties of the track owner under this subpart;

(6) A statement signed by the assignee acknowledging the assignment to that person of responsibility for purposes of compliance with this subpart.

(c) The Administrator may hold the track owner or the assignee or both responsible for compliance with this subpart and subject to the penalties under § 213.313.

(d) A common carrier by railroad which is directed by the Surface Transportation Board to provide service over the track of another railroad under 49 U.S.C. 11125 is considered the owner of that track for the purposes of the application of this subpart during the period the directed service order remains in effect.

§ 213.305 Designation of qualified individuals; general qualifications.

Each track owner to which this subpart applies shall designate qualified individuals responsible for the maintenance and inspection of track in compliance with the safety requirements prescribed in this subpart. Each designated individual, including contractors who are not railroad employees, must meet the following minimum qualifications when required to:

(a) Supervise restorations and renewals of track each individual designated must have—

(1) At least;

(i) Five years of responsible supervisory experience in railroad track maintenance in track class 4 or higher and the successful completion of a course offered by the employer or by a college level engineering program, supplemented by special on the job training emphasizing the techniques to be employed in the supervision, restoration, and renewal of high speed track; or

(ii) A combination of at least one year of responsible supervisory experience in track maintenance in class 4 or higher and the successful completion of a minimum of 80 hours of specialized training in the maintenance of high speed track provided by the employer or by a college level engineering program, supplemented by special on the job training provided by the employer with emphasis on the maintenance of high speed track; or

(iii) A combination of at least two years of experience in track maintenance in track Class 4 or higher and the successful completion of a minimum of 120 hours of specialized training in the maintenance of high speed track provided by the employer or by a college level engineering program supplemented by special on the job training provided by the employer with emphasis on the maintenance of high speed track.

(2) Demonstrated to the track owner that the individual:

(i) Knows and understands the requirements of this subpart;

(ii) Can detect deviations from those requirements; and

(iii) Can prescribe appropriate remedial action to correct or safely compensate for those deviations; and

(3) Written authorization from the track owner to prescribe remedial actions to correct or safely compensate for deviations from the requirements of this subpart and successful completion of a recorded examination on this subpart as part of the qualification process.

(b) Inspect track for defects. Each individual designated must have:

(1) At least:

(i) Five years of responsible experience inspecting track in Class 4 or above and the successful completion of a course offered by the employer or by a college level engineering program, supplemented by special on the job training emphasizing the techniques to be employed in the inspection of high speed track; or

(ii) A combination of at least one year of responsible experience in track inspection in class 4 or above and the successful completion of a minimum of 80 hours of specialized training in the inspection of high speed track provided by the employer or by a college level engineering program, supplemented by special on the job training provided by the employer with emphasis on the inspection of high speed track.

(iii) A combination of at least two years of experience in track maintenance in class 4 or above and the successful completion of a minimum of 120 hours of specialized training in the inspection of high speed track provided by the employer or from a college level engineering program, supplemented by special on the job training provided by the employer with emphasis on the inspection of high speed track.

(2) Demonstrated to the track owner that the individual:

(i) Knows and understands the requirements of this subpart;

(ii) Can detect deviations from those requirements; and

(iii) Can prescribe appropriate remedial action to correct or safely compensate for those deviations; and

(3) Written authorization from the track owner to prescribe remedial actions to correct or safely compensate for deviations from the requirements in this subpart and successful completion of a recorded examination on this subpart as part of the qualification process.

(c) Individuals designated under paragraph (a) or (b) of this section that inspect continuous welded rail track (CWR) or supervise the installation, adjustment, and maintenance of CWR in accordance with the written procedures established by the track owner must have:

(1) Current qualifications under either paragraph (a) or (b) of this section;

(2) Successfully completed a training course of at least eight hours duration specifically developed for the application of written CWR procedures issued by the track owner; and

(3) Demonstrated to the track owner that the individual:

(i) Knows and understands the requirements of those written CWR procedures;

(ii) Can detect deviations from those requirements; and

(iii) Can prescribe appropriate remedial action to correct or safely compensate for those deviations; and

(4) Written authorization from the track owner to prescribe remedial actions to correct or safely compensate for deviations from the requirements in those procedures and successful completion of a recorded examination on those procedures as part of the qualification process. The recorded examination may be written, or it may be a computer file with the results of an interactive training course.

(d) With respect to designations under paragraphs (a), (b), and (c) of this section, each track owner must maintain written records of:

(1) Each designation in effect;

(2) The basis for each designation, including but not limited to:

(i) The exact nature of any training courses attended and the dates thereof;

(ii) The manner in which the track owner has determined a successful completion of that training course, including test scores or other qualifying results;

(3) Track inspections made by each individual as required by § 213.369. These records must be made available for inspection and copying by the Federal Railroad Administration during regular business hours.

(e) Persons not fully qualified to supervise certain renewals and inspect track as outlined in paragraphs (a), (b) and (c) of this section, but with at least one year of maintenance of way or signal experience, may be qualified by the track owner to pass trains over broken rails and pull aparts provided that—

(1) The person is trained, examined and re-examined periodically not to exceed two years, on the following topics as they relate to the safe passage of trains over broken rails or pull aparts—

(i) Rail defect identification, tie condition, track surface and alignment, gage restraint, rail end mismatch, joint bars, and maximum distance between rail ends over which trains may be allowed to pass;

(ii) The purpose of the examination will be to ascertain the persons ability to effectively apply these requirements and will not be used as a disqualifier; and

(iii) A minimum of four hours training will be deemed adequate for initial training.

(2) The person deems it safe and train speeds are limited to a maximum of 10 mph over the broken rail or pull apart;

(3) The person must watch all movements over the broken rail or pull apart and be prepared to stop the train if necessary; and

(4) Person(s) fully qualified under § 213.305 of this subpart are notified and dispatched to the location as soon as practicable for the purpose of authorizing movements and effectuating temporary or permanent repairs.

§ 213.307 Class of track: operating speed limits.

(a) Except as provided in paragraph (b) of this section and §§ 213.329, 213.337(a) and 213.345(c), the following maximum allowable operating speeds apply:

Over track that meets all of the requirements prescribed in this subpart for	The maximum allowable operating speed for trains [1] is
Class 6 track	110 m.p.h.
Class 7 track	125 m.p.h.
Class 8 track	160 m.p.h
Class 9 track	200 m.p.h.

[1] Freight may be transported at passenger train speeds if the following conditions are met:

(1) The vehicles utilized to carry such freight are of equal dynamic performance and have been qualified in accordance with Sections 213.345 and 213.329(d) of this subpart.

(2) The load distribution and securement in the freight vehicle will not adversely affect the dynamic performance of the vehicle. The axle loading pattern is uniform and does not exceed the passenger locomotive axle loadings utilized in passenger service operating at the same maximum speed.

(3) No carrier may accept or transport a hazardous material, as defined at 49 CFR 171.8, except as provided in Column 9A of the Hazardous Materials Table (49 CFR 172.101) for movement in the same train as a passenger-carrying vehicle or in Column 9B of the Table for movement in a train with no passenger-carrying vehicles.

(b) If a segment of track does not meet all of the requirements for its intended class, it is to be reclassified to the next lower class of track for which it does meet all of the requirements of this subpart. If a segment does not meet all of the requirements for class 6, the requirements for classes 1 through 5 apply.

§ 213.309 Restoration or renewal of track under traffic conditions.

(a) Restoration or renewal of track under traffic conditions is limited to the replacement of worn, broken, or missing components or fastenings that do not affect the safe passage of trains.

(b) The following activities are expressly prohibited under traffic conditions:

(1) Any work that interrupts rail continuity, e.g., as in joint bar replacement or rail replacement;

(2) Any work that adversely affects the lateral or vertical stability of the track with the exception of spot tamping an isolated condition where not more than 15 lineal feet of track are involved at any one time and the ambient air temperature is not above 95 degrees; and

(3) Removal and replacement of the rail fastenings on more than one tie at a time within 15 feet.

§ 213.311 Measuring track not under load.

When unloaded track is measured to determine compliance with requirements of this subpart, evidence of rail movement, if any, that occurs while the track is loaded must be added to the measurements of the unloaded track.

§ 213.317 Exemptions.

(a) Any owner of track to which this subpart applies may petition the Federal Railroad Administrator for exemption from any or all requirements prescribed in this subpart.

(b) Each petition for exemption under this section must be filed in the manner and contain the information required by §§ 211.7 and 211.9 of this chapter.

(c) If the Administrator finds that an exemption is in the public interest and is consistent with railroad safety, the Administrator may grant the exemption subject to any conditions the Administrator deems necessary. Notice of each exemption granted is published in the **Federal Register** together with a statement of the reasons therefore.

§ 213.319 Drainage.

Each drainage or other water carrying facility under or immediately adjacent to the roadbed must be maintained and kept free of obstruction, to accommodate expected water flow for the area concerned.

§ 213.321 Vegetation.

Vegetation on railroad property which is on or immediately adjacent to roadbed must be controlled so that it does not—

(a) Become a fire hazard to track-carrying structures;

(b) Obstruct visibility of railroad signs and signals along the right of way and at highway-rail crossings;

(c) Interfere with railroad employees performing normal trackside duties;

(d) Prevent proper functioning of signal and communication lines; or

(e) Prevent railroad employees from visually inspecting moving equipment from their normal duty stations.

§ 213.323 Track gage.

(a) Gage is measured between the heads of the rails at right-angles to the rails in a plane five-eighths of an inch below the top of the rail head.

(b) Gage must be within the limits prescribed in the following table:

Class of track	The gage must be at least	But not more than	The change of gage in 31 feet must not be greater than
6	4′ 8″	4′ 9¼″	½″
7	4′ 8″	4′ 9¼″	½″
8	4′ 8″	4′ 9¼″	½″
9	4′ 8¼″	4′ 9¼″	½″

§ 213.327 Alignment.

(a) Uniformity at any point along the track is established by averaging the measured mid-chord offset values for nine consecutive points centered around that point and which are spaced according to the following table:

Chord Length	Spacing
31′	7′ 9″
62′	15′ 6″
124′	31′ 0″

(b) For a single deviation, alignment may not deviate from uniformity more than the amount prescribed in the following table:

Class of track	The deviation from uniformity of the mid-chord offset for a 31-foot chord may not be more than (inches)	The deviation from uniformity of the mid-chord offset for a 62-foot chord may not be more than (inches)	The deviation from uniformity of the mid-chord offset for a 124-foot chord may not be more than (inches)
6	½	¾	1½
7	½	½	1¼
8	½	½	¾
9	½	½	½

(c) For three or more non-overlapping deviations from uniformity in track alignment occurring within a distance equal to five times the specified chord length, each of which exceeds the limits in the following table, each owner of the track to which this subpart applies shall maintain the alignment of the track within the limits prescribed for each deviation:

Class of track	The deviation from uniformity of the mid-chord off-set for a 31-foot chord may not be more than (inches)	The deviation from uniformity of the mid-chord off-set for a 62-foot chord may not be more than (inches)	The deviation from uniformity of the mid-chord off-set for a 124-foot chord may not be more than (inches)
6	⅜	½	1
7	⅜	⅜	⅞
8	⅜	⅜	½
9	⅜	⅜	⅜

§ 213.329 Curves, elevation and speed limitations.

(a) The maximum crosslevel on the outside rail of a curve may not be more than 7 inches. The outside rail of a curve may not be more than ½ inch lower than the inside rail.

(b) The maximum allowable operating speed for each curve is determined by the following formula:

$$V_{max} = \sqrt{\frac{E_a + 3}{0.0007D}}$$

where—

V_{max} = Maximum allowable operating speed (miles per hour).

E_a = Actual elevation of the outside rail (inches).[1]

D = Degree of curvature (degrees).[2]

3 = 3 inches of unbalance.

Appendix A includes tables showing maximum allowable operating speeds computed in accordance with this formula for various elevations and degrees of curvature for track speeds greater than 90 mph.

(c) For rolling stock meeting the requirements specified in paragraph (d) of this section, the maximum operating speed for each curve may be determined by the following formula:

$$V_{max} = \sqrt{\frac{E_a + E_u}{0.0007D}}$$

where—

V_{max} = Maximum allowable operating speed (miles per hour).

E_a = Actual elevation of the outside rail (inches).[1]

D = Degree of curvature (degrees).[2]

E_u = Unbalanced elevation.

(d) Qualified equipment may be operated at curving speeds determined by the formula in paragraph (c) of this section, provided each specific class of equipment is approved for operation by the Federal Railroad Administration and demonstrate that—

(1) When positioned on a track with uniform superelevation, E_a, reflecting the intended target cant deficiency, E_u, no wheel of the equipment unloads to a value of 60 percent or less of its static value on perfectly level track and the roll angle between the floor of the vehicle and the horizontal does not exceed 5.7 degrees.

(2) When positioned on a track with a uniform 7-inch superelevation, no wheel unloads to a value less than 60 percent of its static value on perfectly level track and the angle, measured about the roll axis, between the floor of the vehicle and the horizontal does not exceed 8.6 degrees.

(e) The track owner must notify the Federal Railroad Administrator no less than thirty calendar days prior to any proposed implementation of the higher curving speeds allowed when the ''E_u'' term, above, will exceed three inches. This notification must be in writing and shall contain, at a minimum, the following information:

(1) A complete description of the class of equipment involved, including schematic diagrams of the suspension system and the location of the center of gravity above top of rail;

(2) A complete description of the test procedure[1] and instrumentation used to qualify the equipment and the maximum values for wheel unloading and roll angles which were observed during testing;

(3) Procedures or standards in effect which relate to the maintenance of the suspension system for the particular class of equipment;

(4) Identification of line segment on which the higher curving speeds are proposed to be implemented.

(f) In the case of a track owner, or an operator of a passenger or commuter service, who provides passenger or commuter service over trackage of more than one track owner with the same class of equipment, that person may provide written notification to the Federal Railroad Administrator with the written consent of the other affected track owners.[2]

§ 213.331 Track surface.

(a) For a single deviation in track surface, each owner of the track to which this subpart applies shall maintain the surface of its track within the limits prescribed in the following table:

[1] Actual elevation for each 155 foot track segment in the body of the curve is determined by averaging the elevation for 10 points through the segment at 15.5 foot spacing. If the curve length is less than 155 feet, average the points through the full length of the body of the curve. If E_u exceeds 4 inches, the Vmax formula applies to the spirals on both ends of the curve.

[2] Degree of curvature is determined by averaging the degree of curvature over the same track segment as the elevation.

[1] The test procedure may be conducted in a test facility whereby all wheels on one side (right or left) of the equipment are raised or lowered by six and then seven inches, the vertical wheel loads under each wheel are measured and a level is used to record the angle through which the floor of the vehicle has been rotated.

[2] Vehicles presently operating at curving speeds allowed under the formula in paragraph (c) of this section, by reason of conditional waivers granted by the Federal Railroad Administration, shall be considered to have successfully complied with the requirements of this section.

Track surface	Class of track			
	6 (inches)	7 (inches)	8 (inches)	9 (inches)
The deviation from uniform [1] profile on either rail at the midordinate of a 31-foot chord may not be more than	1¼	1¼	¾	½
The deviation from uniform profile on either rail at the midordinate of a 62-foot chord may not be more than	1¼	1¼	1¼	1
The deviation from uniform profile on either rail at the midordinate of a 124-foot chord may not be more than	1¾	1½	1¼	1¼
The difference in crosslevel between any two points less than 62 feet apart may not be more than	1½	1½	1½	1½

[1] Uniformity for profile is established by placing the midpoint of the specified chord at the point of maximum measurement.

(b) For three or more non-overlapping deviations in track surface occurring within a distance equal to five times the specified chord length, each of which exceeds the limits in the following table, each owner of the track to which this subpart applies shall maintain the surface of the track within the limits prescribed for each deviation:

Track surface	Class of track			9 (inches)
	6 (inches)	7 (inches)	8 (inches)	
The deviation from uniform profile on either rail at the midordinate of a 31-foot chord may not be more than	⅞	⅞	½	⅜
The deviation from uniform profile on either rail at the midordinate of a 62-foot chord may not be more than	⅞	⅞	⅞	¾
The deviation from uniform profile on either rail at the midordinate of a 124-foot chord may not be more than	1¼	1	⅞	⅞

§ 213.333 Automated vehicle inspection systems.

(a) For track class 7, a qualifying Track Geometry Measurement System (TGMS) vehicle shall be operated at least twice within 120 calendar days with not less than 30 days between inspections. For track classes 8 and 9, it shall be operated at least twice within 60 days with not less than 15 days between inspections.

(b) A qualifying TGMS must meet or exceed minimum design requirements which specify that—

(1) Track geometry measurements shall be taken no more than 3 feet away from the contact point of wheels carrying a vertical load of no less than 10,000 pounds per wheel;

(2) Track geometry measurements shall be taken and recorded on a distance-based sampling interval which shall not exceed 2 feet; and

(3) Calibration procedures and parameters are assigned to the system which assure that measured and recorded values accurately represent track conditions. Track geometry measurements recorded by the system shall not differ on repeated runs at the same site at the same speed more than ⅛ inch.

(c) A qualifying TGMS must be capable of measuring and processing the necessary track geometry parameters, at an interval of no more than every 2 feet, which enables the system to determine compliance with § 213.323, Track gage; § 213.327, Alignment; § 213.329, Curves; elevation and speed limitations; and § 213.331, Track surface.

(d) A qualifying TGMS must be capable of producing, within 24 hours of the inspection, output reports that—

(1) Provide a continuous plot, on a constant-distance axis, of all measured track geometry parameters required in paragraph (c) of this section;

(2) Provide an exception report containing a systematic listing of all track geometry conditions which constitute an exception to the class of track over the segment surveyed.

(e) The output reports required under paragraph (c) of this section must contain sufficient location identification information which enable field forces to easily locate indicated exceptions.

(f) Following a track inspection performed by a qualifying TGMS, the track owner must, within two days after the inspection, field verify and institute remedial action for all exceptions to the class of track.

(g) The track owner shall maintain for a period of one year following an inspection performed by a qualifying TGMS, copy of the plot and the exception printout for the track segment involved, and additional records which:

(1) Specify the date the inspection was made and the track segment involved; and

(2) Specify the location, remedial action taken, and the date thereof, for all listed exceptions to the class.

(h) For track classes 8 and 9, a qualifying Gage Restraint Measurement System (GRMS) shall be operated at least once annually with at least 180 days between inspections to continuously compare loaded track gage to unloaded gage under a known loading condition. The lateral capacity of the track structure must not permit a gage widening ratio (GWR) greater than 0.5 inches.

(i) A GRMS must meet or exceed minimum design requirements which specify that—

(1) Gage restraint shall be measured between the heads of the rail—

(i) At an interval less than or equal to the distance between the gage restraint supports.

(ii) Under an applied vertical load of at least 10,000 pounds per rail,

(iii) Under an applied lateral load which provides for lateral/vertical load ratio of between 0.5 and 1.25 [1], and the net lateral load, or load severity, is greater than 3000 pounds but less than 8000 pounds per rail. Load severity is defined by the formula—

$S = L - cV$

where

S = Load severity, defined as the net lateral load applied to the fastener system (pounds).

L = Actual lateral load applied (pounds).

c = Coefficient of friction between rail/tie which is assigned a nominal value of (0.4).

[1] GRMS equipment using load combinations developing L/V ratios which exceed 0.8 must be operated with caution to protect against the risk of wheel climb by the test wheelset.

V = Actual vertical load applied (pounds).

(2) The measured gage values shall be converted to a projected loaded gage 24 (PLG24) as follows:

PLG24 = UTG + A * (LTG–UTG), where—

UTG= Unloaded track gage measured at a point at least 10 feet from any lateral load application

LTG= Loaded track gage measured at the point of application of the lateral load

A = The extrapolation factor used to convert the measured loaded gage to expected loaded gage under a 24,000 pound lateral load and a 33,000 pound vertical load. for all track—

$$A = \frac{13.2}{(0.001 * L\text{-}0.00035 * V)} - \frac{5.32}{(0.001 * L\text{-}0.00035 * V)^2}$$

where

L = Actual lateral load applied (pounds).

V = Actual vertical load applied (pounds).

(3) The measured gage value shall be converted to a gage widening ratio (GWR) as follows:

$$GWR = \frac{(LTG\text{-}UTG}{L} * 16000$$

(j) A minimum of two vehicles per train operating in classes 8 and 9 shall be equipped with on-board truck side and carbody accelerometers. Each track owner shall have in effect written procedures for the notification of track forces when on-board accelerometers on trains in classes 8 and 9 indicate a possible track-related condition.

(k) For track classes 7 , 8 and 9, an instrumented car having dynamic response characteristics that are representative of other equipment assigned to service or a portable device that monitors on-board instrumentation on trains shall be operated over the track at the revenue speed profile at a frequency of at least twice within 60 days with not less than 15 days between inspections. The instrumented car or the portable device shall provide for the monitoring of vertically and laterally oriented accelerometers near the end of the vehicle at the floor level. In addition, accelerometers shall be mounted at a position directly above the axle of each truck. If the carbody lateral, carbody vertical, truck frame lateral, or truck frame vertical safety limits are exceeded, speeds will be reduced until these vehicle/performance safety limits are not exceeded.

(l) For track classes 8 and 9, an instrumented car having dynamic response characteristics that are representative of other equipment assigned to service shall be operated over the track at the revenue speed profile annually with not less than 180 days between inspections. The instrumented car shall be equipped with instrumented wheelsets to measure wheel/rail forces. If the wheel/rail force limits are exceeded, speeds will be reduced until these vehicle/performance safety limits are not exceeded.

(m) The track owner shall maintain a copy of the most recent exception printouts for the inspections required under paragraphs (k) and (l) of this section.

VEHICLE/TRACK INTERACTION PERFORMANCE LIMITS

Parameter	Safety Limit	Filter/Window	Requirements
Wheel/Rail Forces [1]:			
Minimum Vertical Wheel Load.	10 % of Static	5 ft	No wheel of the equipment shall be permitted to unload to less than 10% of the static vertical wheel load. The static vertical wheel load is defined as the load that the wheel would carry when stationary on level track. The vertical wheel load limit shall be increased by the amount of measurement error.
Wheel L/V Ratio	≤tanδ—.5 1+.5tanδ	5 ft	The ratio of the lateral force that any wheel exerts on an individual rail to the vertical force exerted by the same wheel on the rail shall be less than the safety limit calculated for the wheel's flange angle (δ).
Net Axle Lateral	50 % of static vertical axle load.	5 ft	The net lateral force exerted by any axle on the track shall not exceed 50% of the static vertical load that the axle exerts on the track.
Truck Side L/V Ratio	0.6	5 ft	The ratio of the lateral forces that the wheels on one side of any truck exert on an individual rail to the vertical forces exerted by the same wheels on that rail shall be less than 0.6.
Accelerations:			
Carbody Lateral [2]	0.5 g peak-to-peak	10 Hz 1 sec window	The peak to peak accelerations (measured as the algebraic difference between the two extreme values of measured acceleration in a one-second time period) shall not exceed 0.5g.
Carbody Vertical	0.6 g peak-to-peak	10 Hz 1 sec window	The peak to peak accelerations (measured as the algebraic difference between the two extreme values of measured acceleration in a one-second time period) shall not exceed 0.6g.
Truck Frame Lateral [3]	0.4 g RMS for 2 sec	10 Hz	Truck hunting [4] shall not develop below the maximum authorized speed.

VEHICLE/TRACK INTERACTION PERFORMANCE LIMITS—Continued

Parameter	Safety Limit	Filter/Window	Requirements
Truck Frame Vertical ...	5.0 g zero-to-peak	10 Hz	Truck frame vertical accelerations shall not exceed 5.0 g

[1] The lateral and vertical wheel forces shall be measured with instrumented wheelsets with the measurements processed through a filter having a pass band of 0 to 10 Hz.
[2] Carbody lateral and vertical accelerations shall be measured near the car ends at the floor level.
[3] Truck accelerations in the lateral direction shall be measured at a position directly above the axle. The measurements shall be processed through a filter having a pass band of 0.5 to 10 Hz.
[4] Truck hunting is defined as a sustained cyclic oscillation of the truck which is evidenced by lateral accelerations in excess of 0.4g root mean square for 2 seconds.

§ 213.335 Crossties.

(a) Crossties shall be made of a material to which rail can be securely fastened.

(b) Each 39 foot segment of track shall have—

(1) A sufficient number of crossties which in combination provide effective support that will—

(i) Hold gage within the limits prescribed in § 213.323(b);

(ii) Maintain surface within the limits prescribed in § 213.331; and

(iii) Maintain alignment within the limits prescribed in § 213.327.

(2) The minimum number and type of crossties specified in paragraph (c) of this section effectively distributed to support the entire segment; and

(3) Crossties of the type specified in paragraph (c) of this section that are (is) located at a joint location as specified in paragraph (e) of this section.

(c) For non-concrete tie construction, each 39 foot segment of class 6 track shall have fourteen crossties; classes 7, 8 and 9 shall have 18 crossties which are not—

(1) Broken through;

(2) Split or otherwise impaired to the extent the crossties will allow the ballast to work through, or will not hold spikes or rail fasteners;

(3) So deteriorated that the tie plate or base of rail can move laterally ⅜ inch relative to the crossties;

(4) Cut by the tie plate through more than 40 percent of a tie's thickness;

(5) Configured with less than 2 rail holding spikes or fasteners per tie plate; or

(6) Able, due to insufficient fastener toeload, to maintain longitudinal restraint and maintain rail hold down and gage.

(d) For concrete-tie construction, each 39 foot segment of class 6 track shall have fourteen crossties, classes 7, 8 and 9 shall have 16 crossties which are not—

(1) So deteriorated that the prestress strands are ineffective or withdrawn into the tie at one end and the tie exhibits structural cracks in the rail seat or in the gage of track;

(2) Configured with less than 2 fasteners on the same rail;

(3) So deteriorated in the vicinity of the rail fastener such that the fastener assembly may pull out or move laterally more than ⅜ inch relative to the crosstie;

(4) So deteriorated that the fastener base plate or base of rail can move laterally more than ⅜ inch relative to the crossties;

(5) So deteriorated that rail seat abrasion is sufficiently deep so as to cause loss of rail fastener toeload;

(6) Completely broken through; or

(7) Able, due to insufficient fastener toeload, to maintain longitudinal restraint and maintain rail hold down and gage.

(e) Class 6 track shall have one non-defective crosstie whose centerline is within 18 inches of the rail joint location or two crossties whose center lines are within 25 inches either side of the rail joint location. Class 7, 8, and 9 track shall have two non-defective ties within 25 inches each side of the rail joint.

(f) For track constructed without crossties, such as slab track and track connected directly to bridge structural components, the track structure must meet the requirements of paragraphs (b)(1) (i), (ii), and (iii) of this section.

(g) In classes 7, 8 and 9 there shall be at least three non-defective ties each side of a defective tie.

(h) Where timber crossties are in use there must be tie plates under the running rails on at least nine of 10 consecutive ties.

(i) No metal object which causes a concentrated load by solely supporting a rail shall be allowed between the base of the rail and the bearing surface of the tie plate.

§ 213.337 Defective rails.

(a) When an owner of track to which this part applies learns, through inspection or otherwise, that a rail in that track contains any of the defects listed in the following table, a person designated under § 213.305 shall determine whether or not the track may continue in use. If the person determines that the track may continue in use, operation over the defective rail is not permitted until —

(1) The rail is replaced; or

(2) The remedial action prescribed in the table is initiated—

REMEDIAL ACTION

Defect	Length of defect (inch)		Percent of rail head cross-sectional area weakened by defect		If defective rail is not replaced, take the remedial action prescribed in note
	More than	But not more than	Less than	But not less than	
Transverse fissure	.....	.....	70	5	B.
	.....	.....	100	70	A2.
	.....	.....	.....	100	A.
Compound fissure	.....	.....	70	5	B.
	.....	.....	100	70	A2.
	.....	.....	.....	100	A.
Detail fracture	.....	.....	25	5	C.
Engine burn fracture	.....	.....	80	25	D.

REMEDIAL ACTION—Continued

Defect	Length of defect (inch)		Percent of rail head cross-sectional area weakened by defect		If defective rail is not replaced, take the remedial action prescribed in note
	More than	But not more than	Less than	But not less than	
Defective weld			100	80	A2 and E and H.
				100	A or E and H.
Horizontal split head	1	2			H and F.
Vertical split head	2	4			I and G.
Split web	4				B.
Piped rail	(1)	(1)	(1)		A.
Head web separation					
Bolt hole crack	½	1			H and F.
	1	1½			H and G.
	1½				B.
	(1)	(1)	(1)		A.
Broken base	1	6			D.
	6				A or E and I.
Ordinary break					A or E.
Damaged rail					D.
Flattened rail	Depth≥ ⅜ and Length ≥ 8				H.

(1) Break out in rail head.

Notes:

A. Assign person designated under § 213.305 to visually supervise each operation over defective rail.

A2. Assign person designated under § 213.305 to make visual inspection. That person may authorize operation to continue without visual supervision at a maximum of 10 mph for up to 24 hours prior to another such visual inspection or replacement or repair of the rail.

B. Limit operating speed over defective rail to that as authorized by a person designated under § 213.305(a)(1)(i) or (ii). The operating speed cannot be over 30 mph.

C. Apply joint bars bolted only through the outermost holes to defect within 20 days after it is determined to continue the track in use. Limit operating speed over defective rail to 30 mph until angle bars are applied; thereafter, limit speed to 50 mph. When a search for internal rail defects is conducted under § 213.339 and defects are discovered which require remedial action C, the operating speed shall be limited to 50 mph, for a period not to exceed 4 days. If the defective rail has not been removed from the track or a permanent repair made within 4 days of the discovery, limit operating speed over the defective rail to 30 mph until joint bars are applied; thereafter, limit speed to 50 mph.

D. Apply joint bars bolted only through the outermost holes to defect within 10 days after it is determined to continue the track in use. Limit operating speed over the defective rail to 30 mph or less as authorized by a person designated under § 213.305(a)(1)(i) or (ii) until angle bars are applied; thereafter, limit speed to 50 mph.

E. Apply joint bars to defect and bolt in accordance with § 213.351(d) and (e).

F. Inspect rail 90 days after it is determined to continue the track in use.

G. Inspect rail 30 days after it is determined to continue the track in use.

H. Limit operating speed over defective rail to 50 mph.

I. Limit operating speed over defective rail to 30 mph.

(b) As used in this section—

(1) *Transverse Fissure* means a progressive crosswise fracture starting from a crystalline center or nucleus inside the head from which it spreads outward as a smooth, bright, or dark, round or oval surface substantially at a right angle to the length of the rail. The distinguishing features of a transverse fissure from other types of fractures or defects are the crystalline center or nucleus and the nearly smooth surface of the development which surrounds it.

(2) *Compound Fissure* means a progressive fracture originating in a horizontal split head which turns up or down in the head of the rail as a smooth, bright, or dark surface progressing until substantially at a right angle to the length of the rail. Compound fissures require examination of both faces of the fracture to locate the horizontal split head from which they originate.

(3) *Horizontal Split Head* means a horizontal progressive defect originating inside of the rail head, usually one-quarter inch or more below the running surface and progressing horizontally in all directions, and generally accompanied by a flat spot on the running surface. The defect appears as a crack lengthwise of the rail when it reaches the side of the rail head.

(4) *Vertical Split Head* means a vertical split through or near the middle of the head, and extending into or through it. A crack or rust streak may show under the head close to the web or pieces may be split off the side of the head.

(5) *Split Web* means a lengthwise crack along the side of the web and extending into or through it.

(6) *Piped Rail* means a vertical split in a rail, usually in the web, due to failure of the shrinkage cavity in the ingot to unite in rolling.

(7) *Broken Base* means any break in the base of the rail.

(8) *Detail Fracture* means a progressive fracture originating at or near the surface of the rail head. These fractures should not be confused with transverse fissures, compound fissures, or other defects which have internal origins. Detail fractures may arise from shelly spots, head checks, or flaking.

(9) *Engine Burn Fracture* means a progressive fracture originating in spots where driving wheels have slipped on top of the rail head. In developing downward they frequently resemble the compound or even transverse fissures with which they should not be confused or classified.

(10) *Ordinary Break* means a partial or complete break in which there is no sign of a fissure, and in which none of the other defects described in this paragraph (b) are found.

(11) *Damaged Rail* means any rail broken or injured by wrecks, broken, flat, or unbalanced wheels, slipping, or similar causes.

(12) *Flattened Rail* means a short length of rail, not a joint, which has flattened out across the width of the rail head to a depth of ⅜ inch or more below the rest of the rail. Flattened rail occurrences have no repetitive

regularity and thus do not include corrugations, and have no apparent localized cause such as a weld or engine burn. Their individual length is relatively short, as compared to a condition such as head flow on the low rail of curves.

§ 213.339 Inspection of rail in service.

(a) A continuous search for internal defects must be made of all rail in track at least twice annually with not less than 120 days between inspections.

(b) Inspection equipment must be capable of detecting defects between joint bars, in the area enclosed by joint bars.

(c) Each defective rail must be marked with a highly visible marking on both sides of the web and base.

(d) If the person assigned to operate the rail defect detection equipment being used determines that, due to rail surface conditions, a valid search for internal defects could not be made over a particular length of track, the test on that particular length of track cannot be considered as a search for internal defects under § 213.337(a).

(e) If a valid search for internal defects cannot be conducted for reasons described in paragraph (d) of this section, the track owner shall, before the expiration of time limits—

(1) Conduct a valid search for internal defects;

(2) Reduce operating speed to a maximum of 25 miles per hour until such time as a valid search for internal defects can be made; or

(3) Remove the rail from service.

§ 213.341 Initial inspection of new rail and welds.

The track owner shall provide for the initial inspection of newly manufactured rail, and for initial inspection of new welds made in either new or used rail. A track owner may demonstrate compliance with this section by providing for:

(a) In-service inspection—A scheduled periodic inspection of rail and welds that have been placed in service, if conducted in accordance with the provisions of § 213.339, and if conducted not later than 90 days after installation, shall constitute compliance with paragraphs (b) and (c) of this section;

(b) Mill inspection—A continuous inspection at the rail manufacturer's mill shall constitute compliance with the requirement for initial inspection of new rail, provided that the inspection equipment meets the applicable requirements specified in § 213.339. The track owner shall obtain a copy of the manufacturer's report of inspection and retain it as a record until the rail receives its first scheduled inspection under § 213.339;

(c) Welding plant inspection—A continuous inspection at a welding plant, if conducted in accordance with the provisions of paragraph (b) of this section, and accompanied by a plant operator's report of inspection which is retained as a record by the track owner, shall constitute compliance with the requirements for initial inspection of new rail and plant welds, or of new plant welds made in used rail; and

(d) Inspection of field welds—Initial inspection of new field welds, either those joining the ends of CWR strings or those made for isolated repairs, shall be conducted not less than one day and not more than 30 days after the welds have been made. The initial inspection may be conducted by means of portable test equipment. The track owner shall retain a record of such inspections until the welds receive their first scheduled inspection under § 213.339.

(e) Each defective rail found during inspections conducted under paragraph (a) or (d) of this section must be marked with highly visible markings on both sides of the web and base and the remedial action as appropriate under § 213.337 will apply.

§ 213.343 Continuous welded rail (CWR).

Each track owner with track constructed of CWR shall have in effect written procedures which address the installation, adjustment, maintenance and inspection of CWR, and a training program for the application of those procedures, which shall be submitted to the Federal Railroad Administration within six months following [the effective date of the final rule]. FRA shall review each plan for compliance with the following—

(a) Procedures for the installation and adjustment of CWR which include—

(1) Designation of a desired rail installation temperature range for the geographic area in which the CWR is located; and

(2) Destressing procedures/methods which address proper attainment of the desired rail installation temperature range when adjusting CWR.

(b) Rail anchoring or fastening requirements that will provide sufficient restraint to limit longitudinal rail and crosstie movement to the extent practical, and specifically addressing CWR rail anchoring or fastening patterns on bridges, bridge approaches, and at other locations where possible longitudinal rail and crosstie movement associated with normally expected train-induced forces, is restricted.

(c) Procedures which specifically address maintaining a desired rail installation temperature range when cutting CWR including rail repairs, in-track welding, and in conjunction with adjustments made in the area of tight track, a track buckle, or a pull-apart. Rail repair practices must take into consideration existing rail temperature so that—

(1) When rail is removed, the length installed shall be determined by taking into consideration the existing rail temperature and the desired rail installation temperature range; and

(2) Under no circumstances should rail be added when the rail temperature is below that designated by paragraph (a)(1) of this section, without provisions for later adjustment.

(d) Procedures which address the monitoring of CWR in curved track for inward shifts of alignment toward the center of the curve as a result of disturbed track.

(e) Procedures which control train speed on CWR track when—

(1) Maintenance work, track rehabilitation, track construction, or any other event occurs which disturbs the roadbed or ballast section and reduces the lateral and/or longitudinal resistance of the track; and

(2) In formulating the procedures under this paragraph (e), the track owner must—

(i) Determine the speed required, and the duration and subsequent removal of any speed restriction based on the restoration of the ballast, along with sufficient ballast re-consolidation to stabilize the track to a level that can accommodate expected train-induced forces. Ballast re-consolidation can be achieved through either the passage of train tonnage or mechanical stabilization procedures, or both; and

(ii) Take into consideration the type of crossties used.

(f) Procedures which prescribe when physical track inspections are to be performed to detect buckling prone conditions in CWR track. At a minimum, these procedures shall address inspecting track to identify—

(1) Locations where tight or kinky rail conditions are likely to occur;

(2) Locations where track work of the nature described in paragraph (e)(1) of this section have recently been performed; and

(3) In formulating the procedures under this paragraph (f), the track owner shall—

(i) Specify the timing of the inspection; and

(ii) Specify the appropriate remedial actions to be taken when buckling prone conditions are found.

(g) The track owner shall have in effect a comprehensive training program for the application of these written CWR procedures, with provisions for periodic re-training, for those individuals designated under § 213.305(c) of this part as qualified to supervise the installation, adjustment, and maintenance of CWR track and to perform inspections of CWR track.

(h) The track owner shall prescribe recordkeeping requirements necessary to provide an adequate history of track constructed with CWR. At a minimum, these records must include:

(1) Rail temperature, location and date of CWR installations. This record shall be retained for at least one year; and

(2) A record of any CWR installation or maintenance work that does not conform with the written procedures. Such record must include the location of the rail and be maintained until the CWR is brought into conformance with such procedures.

(i) As used in this section —

(1) *Adjusting/Destressing* means the procedure by which a rail's temperature is re-adjusted to the desired value. It typically consists of cutting the rail and removing rail anchoring devices, which provides for the necessary expansion and contraction, and then re-assembling the track.

(2) *Buckling Incident* means the formation of a lateral mis-alignment sufficient in magnitude to constitute a deviation of 5 inches measured with a 62-foot chord. These normally occur when rail temperatures are relatively high and are caused by high longitudinal compressive forces.

(3) *Continuous Welded Rail (CWR)* means rail that has been welded together into lengths exceeding 400 feet.

(4) *Desired Rail Installation Temperature Range* means the rail temperature range, within a specific geographical area, at which forces in CWR should not cause a track buckle in extreme heat, or a pull-apart during extreme cold weather.

(5) *Disturbed Track* means the disturbance of the roadbed or ballast section, as a result of track maintenance or any other event, which reduces the lateral and/or longitudinal resistance of the track.

(6) *Mechanical Stabilization* means a type of procedure used to restore track resistance to disturbed track following certain maintenance operations. This procedure may incorporate dynamic track stabilizers or ballast consolidators, which are units of work equipment that are used as a substitute for the stabilization action provided by the passage of tonnage trains.

(7) *Rail Anchors* means those devices which are attached to the rail and bear against the side of the crosstie to control longitudinal rail movement. Certain types of rail fasteners also act as rail anchors and control longitudinal rail movement by exerting a downward clamping force on the upper surface of the rail base.

(8) *Rail Temperature* means the temperature of the rail, measured with a rail thermometer.

(9) *Tight/Kinky Rail* means CWR which exhibits minute alignment irregularities which indicate that the rail is in a considerable amount of compression.

(10) *Train-induced Forces* means the vertical, longitudinal, and lateral dynamic forces which are generated during train movement and which can contribute to the buckling potential.

(11) *Track Lateral Resistance* means the resistance provided to the rail/crosstie structure against lateral displacement.

(12) *Track Longitudinal Resistance* means the resistance provided by the rail anchors/rail fasteners and the ballast section to the rail/crosstie structure against longitudinal displacement.

§ 213.345 Vehicle qualification testing.

(a) All rolling stock types must be qualified for operation for their intended track classes in order to demonstrate that the vehicle dynamic response to track alignment and geometry variations are within acceptable limits to assure safe operation. Rolling stock operating in class 6 within one year prior to the promulgation of this subpart shall be considered as being successfully qualified for class 6 track and vehicles presently operating at class 7 speeds by reason of conditional waivers shall be considered as qualified for class 7.

(b) The qualification testing will insure that the equipment will not exceed the vehicle/track performance safety limits specified in § 213.333 at any speed less than 10 mph above the proposed maximum operating speed.

(c) To obtain the test data necessary to support the analysis required in paragraphs (a) and (b) of this section, the track owner shall have a test plan which shall consider the operating practices and conditions, signal system, road crossings and trains on adjacent tracks during testing. The track owner shall establish a target maximum testing speed (at least 10 mph above the maximum proposed operating speed) and target test and operating conditions and conduct a test program sufficient to evaluate the operating limits of the track and equipment. The test program shall demonstrate vehicle dynamic response as speeds are incrementally increased from acceptable class 6 limits to the target maximum test speeds. The test shall be suspended at that speed where any of the vehicle/track performance limits in § 213.333 are exceeded.

(d) At the end of the test, when maximum safe operating speed is known along with permissible levels of cant deficiency, an additional run will be made with the subject equipment over the entire route proposed for revenue service at the speeds the railroad will request FRA to approve for such service and a second run again at 10 mph above this speed. A report of the test procedures and results shall be submitted to FRA upon the completions of the tests. The test report shall include the design flange angle of the equipment which shall be used for the determination of the lateral to vertical wheel load safety limit for the track/vehicle performance measurements required per § 213.333(k).

(e) As part of the submittal required in paragraph (d) of the section, the operator will include an analysis and description of the signal system and operating practices to govern operations in classes 7, 8 and 9. This statement will include a statement of sufficiency in these areas for the class of operation.

(f) Based on test results and submissions, FRA will approve a maximum train speed and value of cant deficiency for revenue service.

§ 213.347 Automotive or railroad crossings at grade.

(a) No at-grade (level) crossings, public or private, or rigid railroad crossings at-grade may coexist with class 8 and 9 track.

(b) If train operation is projected at class 7 speed for a track segment that will include rail-highway grade crossings, the track owner shall submit for FRA's approval a complete description of the proposed warning/barrier system to address the protection of highway traffic and high speed trains.

§ 213.349 Rail end mismatch.

Any mismatch of rails at joints may not be more than that prescribed by the following table—

Class of track	Any mismatch of rails at joints may not be more than the following	
	On the tread of the rail ends (inch)	On the gage side of the rail ends (inch)
Class 6, 7, 8 and 9	⅛	⅛

§ 213.351 Rail joints.

(a) Each rail joint, insulated joint, and compromise joint must be of a structurally sound design and dimensions for the rail on which it is applied.

(b) If a joint bar is cracked, broken, or because of wear allows excessive vertical movement of either rail when all bolts are tight, it must be replaced.

(c) If a joint bar is cracked or broken between the middle two bolt holes it must be replaced.

(d) Each rail must be bolted with at least two bolts at each joint.

(e) Each joint bar must be held in position by track bolts tightened to allow the joint bar to firmly support the abutting rail ends and to allow longitudinal movement of the rail in the joint to accommodate expansion and contraction due to temperature variations. When no-slip, joint-to-rail contact exists by design, the requirements of this section do not apply. Those locations, when over 400 feet long, are considered to be continuous welded rail track and must meet all the requirements for continuous welded rail track prescribed in this subpart.

(f) No rail shall have a bolt hole which is torch cut or burned.

(g) No joint bar shall be reconfigured by torch cutting.

§ 213.352 Torch cut rail

(a) Except as a temporary repair in emergency situations no rail having a torch cut end shall be used. When a rail end is torch cut in emergency situations, speed over that rail must not exceed the maximum allowable for Class 2 track. For existing torch cut rail ends the following shall apply—

(1) Within six months of [the effective date of the final rule], all torch cut rail ends in Class 6 track must be removed.

(2) For class 7, 8, and 9 track, speeds shall be reduced to class 6 until the torch cut rail is replaced.

(b) Following the expiration of the time limits specified in paragraph a of this section, any torch cut rail end not removed must be removed within 30 days of discovery. Speed over that rail must not exceed the maximum allowable for Class 2 track until removed.

§ 213.353 Turnouts and crossovers, generally.

(a) In turnouts and track crossings, the fastenings must be intact and maintained so as to keep the components securely in place. Also, each switch, frog, and guard rail must be kept free of obstructions that may interfere with the passage of wheels. Use of rigid rail crossings at grade is limited per § 213.347.

(b) Track must be equipped with rail anchoring through and on each side of track crossings and turnouts, to restrain rail movement affecting the position of switch points and frogs. Elastic fasteners designed to restrict longitudinal rail movement are considered rail anchoring.

(c) Each flangeway at turnouts and track crossings must be at least 1½ inches wide.

(d) For all turnouts and crossovers, the track owner shall prepare an inspection and maintenance Guidebook for use by railroad employees which shall be submitted to the Federal Railroad Administration. The Guidebook shall contain at a minimum—

(1) Inspection frequency and methodology including limiting measurement values for all components subject to wear or requiring adjustment.

(2) Maintenance techniques.

(e) Each hand operated switch must be equipped with a redundant operating mechanism for maintaining the security of switch point position.

§ 213.355 Frog guard rails and guard faces; gage.

The guard check and guard face gages in frogs must be within the limits prescribed in the following table —

Class of track	Guard check gage,[3] may not be less than	Guard face gage,[4] may not be more than
Class 6 track	4′ 6½″	4′ 5″
Class 7 track	4′ 6½″	4′ 5″
Class 8 track	4′ 6½″	4′ 5″
Class 9 track	4′ 6½″	4′ 5″

[1] A line along that side of the flangeway which is nearer to the center of the track and at the same elevation as the gage line.

[2] A line ⅝ inch below the top of the center line of the head of the running rail, or corresponding location of the tread portion of the track structure.

[3] The distance between the gage line of a frog to the guard line[1] of its guard rail or guarding face, measured across the track at right angles to the gage line.

[4] The distance between guard lines[1], measured across the track at right angles to the gage line.

§ 213.357 Derails.

(a) All industrial or other sidetracks connecting with classes 7, 8 and 9 main tracks shall be equipped with functioning derails of the correct size and type unless railroad equipment on the track, because of grade characteristics cannot move to foul the main track.

(b) Each derail must be clearly visible. When in a locked position a derail must be free of any lost motion which would prevent it from performing its intended function.

(c) Each derail must be maintained to function as intended.

(d) Each derail must be properly installed for the rail to which it is applied.

(e) If a track protected by a derail is occupied by standing railroad rolling stock, the derail shall be in derailing position.

(f) Each derail shall be interlocked with the signal system so as to produce a maximally restrictive signal aspect if the device is not deployed in a completely functional position.

§ 213.359 Track stiffness.

(a) Track shall have a sufficient vertical strength to withstand the maximum vehicle loads generated at maximum permissible train speeds, cant deficiencies and surface defects. For purposes of this section, vertical track strength is defined as the track capacity to constrain vertical deformations so that the track shall return following maximum load to a configuration in compliance with the track performance and geometry requirements of this subpart.

(b) Track shall have sufficient lateral strength to withstand the maximum thermal and vehicle loads generated at maximum permissible train speeds, cant deficiencies and lateral alignment defects. For purposes of this section lateral track strength is defined as the track capacity to constrain lateral deformations so that track shall return following maximum load to a configuration in compliance with the track performance and geometry requirements of this subpart.

§ 213.361 Right of Way

The track owner in class 8 and 9 shall submit a barrier plan, termed a ''right-of-way plan,'' to the Federal Railroad Administration for approval. At a minimum, the plan will contain provisions in areas of demonstrated need for the prevention of-

(a) Vandalism;

(b) Launching of objects from overhead bridges or structures into the path of trains; and

(c) Intrusion of vehicles from adjacent rights of way.

§ 213.365 Visual inspections.

(a) All track must be visually inspected in accordance with the schedule prescribed in paragraph (c) of this section by a person designated under § 213.305.

(b) Each inspection must be made on foot or by riding over the track in a vehicle at a speed that allows the person making the inspection to visually inspect the track structure for compliance with this part. However, mechanical, electrical, and other track inspection devices may be used to supplement visual inspection. If a vehicle is used for visual inspection, the speed of the vehicle may not be more than 5 miles per hour when passing over track crossings and turnouts, otherwise, the inspection vehicle speed shall be at the sole discretion of the inspector, based on track conditions and inspection requirements. When riding over the track in a vehicle, the inspection will be subject to the following conditions—

(1) One inspector in a vehicle may inspect up to two tracks at one time provided that the inspector's visibility remains unobstructed by any cause and that the second track is not centered more than 30 feet from the track upon which the inspector is riding;

(2) Two inspectors in one vehicle may inspect up to four tracks at a time provided that the inspector's visibility remains unobstructed by any cause and that each track being inspected is centered within 39 feet from the track upon which the inspectors are riding;

(3) Each main track is actually traversed by the vehicle or inspected on foot at least once every two weeks, and each siding is actually traversed by the vehicle or inspected on foot at least once every month. On high density commuter railroad lines where track time does not permit an on track vehicle inspection, and where track centers are 15 foot or less, the requirements of this paragraph (b)(3) will not apply; and

(4) Track inspection records must indicate which track(s) are traversed by the vehicle or inspected on foot as outlined in paragraph (b)(3) of this section.

(c) Each track inspection must be made in accordance with the following schedule—

Class of track	Required frequency
6, 7, and 8	Twice weekly with at least 2 calendar-day's interval between inspections.
9	Three times per week.

(d) If the person making the inspection finds a deviation from the requirements of this part, the person shall immediately initiate remedial action.

(e) Each turnout and crossover must be inspected on foot at least weekly. The inspection must be in accordance with the Guidebook required under § 213.353.

(f) In track classes 8 and 9, if no train traffic operates for a period of 8 hours, a train shall be operated at a speed not to exceed 100 miles per hour over the track before the resumption of operations at the maximum authorized speed.

§ 213.367 Special inspections.

In the event of fire, flood, severe storm, temperature extremes or other occurrence which might have damaged track structure, a special inspection must be made of the track involved as soon as possible after the occurrence.

§ 213.369 Inspection records.

(a) Each owner of track to which this part applies shall keep a record of each inspection required to be performed on that track under this subpart.

(b) Except as provided in paragraph (e) of this section, each record of an inspection under § 213.365 shall be prepared on the day the inspection is made and signed by the person making the inspection. Records must specify the track inspected, date of inspection, location and nature of any deviation from the requirements of this part, and the remedial action taken by the person making the inspection. The owner shall designate the location(s) where each original record shall be maintained for at least one year after the inspection covered by the record. The owner shall also designate one location, within 100 miles of each state in which they conduct operations, where copies of record which apply to those operations are either maintained or can be viewed following 10 days notice by the Federal Railroad Administration.

(c) Rail inspection records must specify the date of inspection, the location and nature of any internal defects found, the remedial action taken and the date thereof, and the location of any intervals of track not tested per § 213.339(d). The owner shall retain a rail inspection record for at least two years after the inspection and for one year after remedial action is taken.

(d) Each owner required to keep inspection records under this section shall make those records available for inspection and copying by the Federal Railroad Administrator.

(e) For purposes of compliance with the requirements of this section, an owner of track may maintain and transfer records through electronic transmission, storage, and retrieval provided that—

(1) The electronic system be designed such that the integrity of each record maintained through appropriate levels of security such as recognition of an electronic signature, or other means, which uniquely identify the initiating person as the author of that record. No two persons shall have the same electronic identity;

(2) The electronic storage of each record must be initiated by the person making the inspection within 24 hours following the completion of that inspection;

(3) The electronic system must ensure that each record cannot be modified in any way, or replaced, once the record is transmitted and stored;

(4) Any amendment to a record must be electronically stored apart from the record which it amends. Each amendment to a record must be uniquely identified as to the person making the amendment;

(5) The electronic system must provide for the maintenance of inspection records as originally submitted without corruption or loss of data; and

(6) Paper copies of electronic records and amendments to those records, that may be necessary to document compliance with this part, must be made available for inspection and copying by the FRA and track inspectors responsible under § 213.305. Such paper copies shall be made available to the track inspectors and at the locations specified in paragraph (b) of this section.

(7) Track inspection records shall be kept available to persons who performed the inspection and to persons performing subsequent inspections.

(f) Each Track/Vehicle Performance record required under § 213.333 (g), and (m) shall be made available for inspection and copying by the FRA at the locations specified in paragraph (b) of this section.

Appendix A to Part 213—Maximum Allowable Curving Speeds

TABLE 1.—THREE INCHES UNBALANCE

Degree of curvature	Elevation of outer rail (inches)												
	0	½	1	1½	2	2½	3	3½	4	4½	5	½	6
	Maximum allowable operating speed (mph)												
0°30′	93	100	107	113	120	125	131	136	141	146	151	156	160
0°40′	80	87	93	98	103	109	113	118	122	127	131	135	139
0°50′	72	78	83	88	93	97	101	106	110	113	117	121	124
1°00′	66	71	76	80	85	89	93	96	100	104	107	110	113
1°15′	59	63	68	72	76	79	83	86	89	93	96	99	101
1°30′	54	58	62	66	69	72	76	79	82	85	87	90	93
1°45′	50	54	57	61	64	67	70	73	76	78	81	83	86
2°00′	46	50	54	57	60	63	66	68	71	73	76	78	80
2°15′	44	47	50	54	56	59	62	64	67	69	71	74	76
2°30′	41	45	48	51	54	56	59	61	63	66	68	70	72
2°45′	40	43	46	48	51	54	56	58	60	62	65	66	68
3°00′	38	41	44	46	49	51	54	56	58	60	62	64	66
3°15′	36	39	42	45	47	49	51	54	56	57	59	61	63
3°30′	35	38	40	43	45	47	50	52	54	55	57	59	61
3°45′	34	37	39	41	44	46	48	50	52	54	55	57	59
4°00′	33	35	38	40	42	44	46	48	50	52	54	55	57
4°30′	31	33	36	38	40	42	44	45	47	49	50	52	54
5°00′	29	32	34	36	38	40	41	43	45	46	48	49	41
5°30′	28	30	32	34	36	38	40	41	43	44	46	47	48
6°00′	27	29	31	33	35	36	38	39	41	42	44	45	46
6°30′	26	28	30	31	33	35	36	38	39	41	42	43	45
7°00′	25	27	29	30	32	34	35	36	38	39	40	42	43
8°00′	23	25	27	28	30	31	33	34	35	37	38	39	40
9°00′	22	24	25	27	28	30	31	32	33	35	36	37	38
10°00′	21	22	24	25	27	28	29	31	32	33	34	35	36
11°00′	20	21	23	24	26	27	28	29	30	31	32	33	34
12°00′	19	20	22	23	24	26	27	28	29	30	31	32	33

TABLE 2.—FOUR INCHES UNBALANCE

Degree of curvature	Elevation of outer rail (inches)												
	0	½	1	1½	2	2½	3	3½	4	4½	5	5½	6
	Maximun allowable operating speed (mph)												
0°30′	107	113	120	125	131	136	141	146	151	156	160	165	169
0°40′	93	98	104	109	113	118	122	127	131	135	139	143	146
0°50′	83	88	93	97	101	106	110	113	117	121	124	128	131
1°00′	76	80	85	89	93	96	100	104	107	110	113	116	120
1°15′	68	72	76	79	83	86	89	93	96	99	101	104	107
1°30′	62	65	69	72	76	79	82	85	87	90	93	95	98
1°45′	57	61	64	67	70	73	76	78	81	83	86	88	90
2°00′	53	57	60	63	65	68	71	73	76	78	80	82	85
2°15′	50	53	56	59	62	64	67	69	71	73	76	78	80
2°30′	48	51	53	56	59	61	63	65	68	70	72	74	76
2°45′	46	48	51	53	56	58	60	62	64	66	68	70	72
3°00′	44	46	49	51	53	56	58	60	62	64	65	67	69
3°15′	42	44	47	49	51	53	55	57	59	61	63	65	66
3°30′	40	43	45	47	49	52	53	55	57	59	61	62	64
3°45′	39	41	44	46	48	50	52	53	55	57	59	60	62
4°00′	38	40	42	44	46	48	50	52	53	55	57	58	60
4°30′	36	38	40	42	44	45	47	49	50	52	53	55	56
5°00′	34	36	38	40	41	43	45	46	48	49	51	52	53
5°30′	32	34	36	38	39	41	43	44	46	47	48	50	51
6°00′	31	33	35	36	38	39	41	42	44	45	46	48	49
6°30′	30	31	33	35	36	38	39	41	42	43	44	46	47
7°00′	29	30	32	34	35	36	38	39	40	42	43	44	45
8°00′	27	28	30	31	33	34	35	37	38	39	40	41	42
9°00′	25	27	28	30	31	32	33	35	36	37	38	39	40
10°00′	24	25	27	28	29	30	32	33	34	35	36	37	38
11°00′	23	24	25	27	28	29	30	31	32	33	34	35	36
12°00′	22	23	24	26	27	28	29	30	31	32	33	34	35

APPENDIX B TO PART 1213.—SCHEDULE OF CIVIL PENALTIES [1]

Section	Violation	Willful violation
Subpart A—General:		
213.4(a) Excepted track [2]	$2,500	$5,000
213.4(b) Excepted track [2]	2,500	5,000
213.4(c) Excepted track [2]	2,500	5,000
213.4(d) Excepted track	2,500	5,000
213.4(e):		
1, Excepted track	5,000	7,500
2, Excepted track	7,000	10,000
3, Excepted track	7,000	10,000
213.7 Designation of qualified persons to supervise certain renewals and inspect track	1,000	2,000
213.9 classes or track:		
Operating speed limits	2,500	5,000
213.11 Restoration or renewal of track under traffic conditions	2,500	5,000
213.13 Measuring track not under load	1,000	2,000
Subpart B—Roadbed:		
213.33 Drainage	2,500	5,000
213.37 Vegetation	1,000	2,000
Subpart C—Track geometry:		
213.53 Gage	5,000	7,500
213.55 Alinement	5,000	7,500
213.57 Curves: elevation and speed limitations	2,500	5,000
213.59 Elevation of curved track; runoff	2,500	5,000
213.63 Track surface	5,000	7,500
Subpart D—Track surface:		
213.103 Ballast; general	2,500	5,000
213.109 Crossties:		
(a) Material used	1,000	2,000
(b) Distribution of ties	2,500	5,000
(c) Sufficient number of nondefective ties	1,000	2,000
(d) Joint ties	2,500	5,000
213.113 Defective rails	5,000	7,500
213.115 Rail end mismatch	2,500	5,000
213.121(a) Rail joints	2,500	5,000
213,121(b) Rail joints	2,500	5,000
213.121(c) Rail joints	5,000	7,500
213.121(d) Rail joints	2,500	5,000
213.121(e) Rail joints	2,500	5,000
213.121(f) Rail joints	2,500	5,000
213.121(g) Rail joints	5,000	7,500
213.123 Tie plates	1,000	2,000
213.127 Track spikes	2,500	5,000
213.133 Turnouts and track crossings generally	1,000	2,000
213.135 Switches:		
(a) Through (g)	2,500	5,000
(h) Chipped or worn points	5,000	7,500
213.137 Frogs	2,500	5,000
213.139 Spring rail frogs	5,000	7,500
213.141 Self-guarded frogs	2,500	5,000
213.143 Frog guard rails and guard faces; gage	2,500	5,000
Subpart E—Track appliances and track-related devices:		
213.205 Derails	2,500	5,000
Subpart F—Inspection:		
213.233 Track Inspections	2,000	4,000
213.235 Switch and track crossings inspection	2,000	4,000
213.237 Inspection of rail	2,500	5,000
213.239 Special inspections	2,500	5,000
213.241 Inspection records	1,000	2,000

[1] A penalty may be assessed against an individual only for a willful violation. The Administrator reserves the right to assess a penalty of up to $20,000 for any violation where circumstances warrant. See 49 CFR Part 209, Appendix A.

[2] In addition to assessment of penalties for each instance of noncompliance with the requirements identified by this footnote, track segments designated as excepted track that are or become ineligible for such designation by virtue of noncompliance with any of the requirements to which this footnote applies are subject to all other requirements of Part 212 until such noncompliance is remedied.

Issued in Washington, D.C. on June 19, 1997.

Donald M. Itzkoff,

Deputy Administrator, Federal Railroad Administration.

[FR Doc. 97–16663 Filed 7–2–97; 8:45 am]

BILLING CODE 4910–06–M